DIST	COUNTY	ROUTE	KILOMETER POST TOTAL PROJECT	SHEET NO.	TOTAL SHEETS
04	SF	80	13.2/13.9	214R1	1204

REGISTERED ENGINEER-CIVIL

12-6-04

PLANS APPROVAL DATE

REGISTERED PROFESSIONAL ENGINEER T. W. SPARKS No. E16039 Exp. 9-30-11 ELECTRICAL STATE OF CALIFORNIA

The State of California or its officers or agents shall not be responsible for the accuracy or completeness of electronic copies of this plan sheet.

T.Y. LIN / MOFFATT & NICHOL
825 BATTERY STREET
SAN FRANCISCO, CA 94111

Caltrans Metric

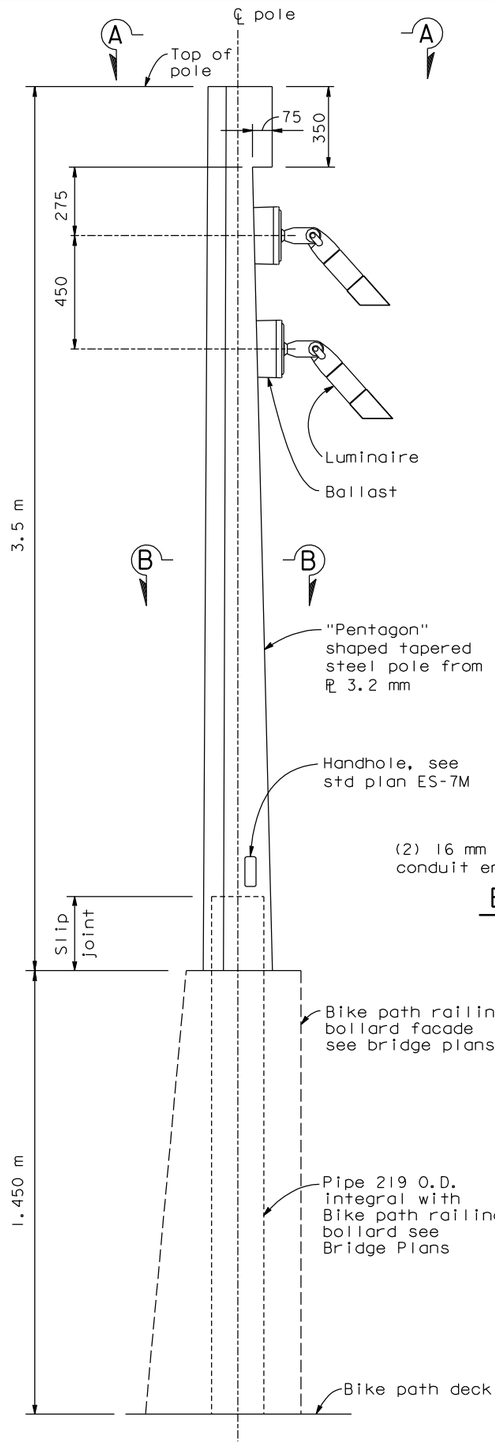

ELEVATION
POLE DETAIL
Not to scale

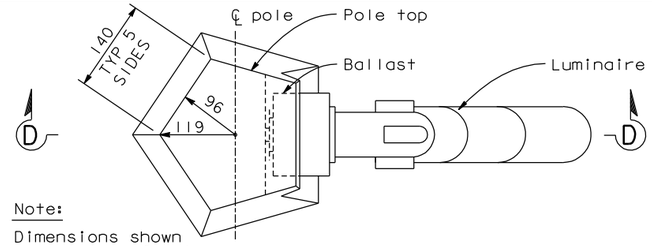

Note:
Dimensions shown are at top of pole.

SECTION A-A
Not to scale

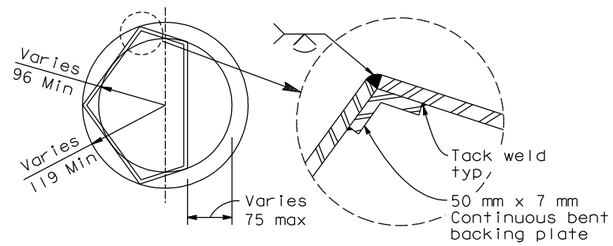

SECTION B-B
Not to scale

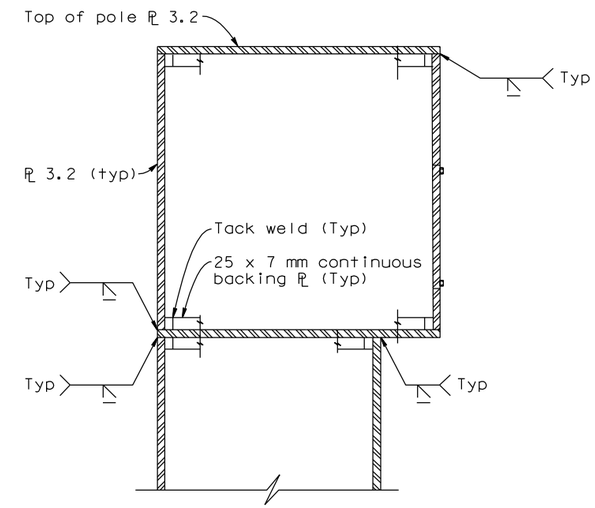

DETAIL AT TOP OF POLE
Not to scale

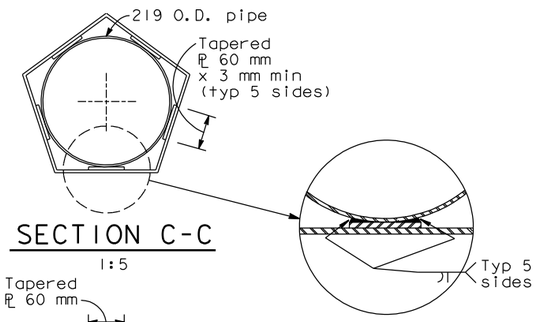

SECTION C-C
1:5

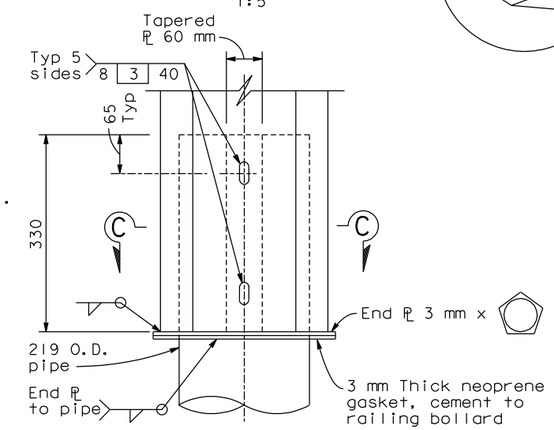

SLIP JOINT DETAIL
(Verify fit with Bike path railing bollard fabricator)
1:5

Pole notes:

1. Wind Loading: 190 km/h velocity (at bridge deck) AASHTO
2. All welding continuous unless otherwise noted on the plans. All welding to be done in accordance with the standard specifications.
3. Pole details shall be submitted to the engineer for approval.
4. For pole finish see special provisions.
5. For additional notes see std plan ES-7M.

Luminaire fixture notes:

1. Finish: Double chromate conversion undercoating with thermoplastic polyester powder coat finish.
2. Hardware: Stainless steel corrosion resistant.
3. U.L. Listed wet location.
4. Beam spread: 30°
5. Lamp: 35 watt, par 20 metal halide

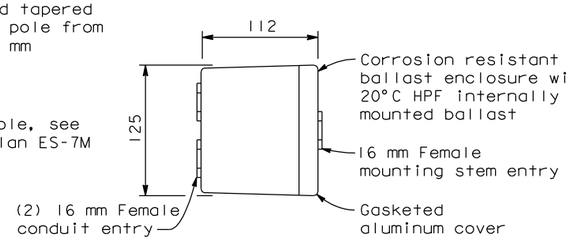

BALLAST - TOP VIEW
Not to scale

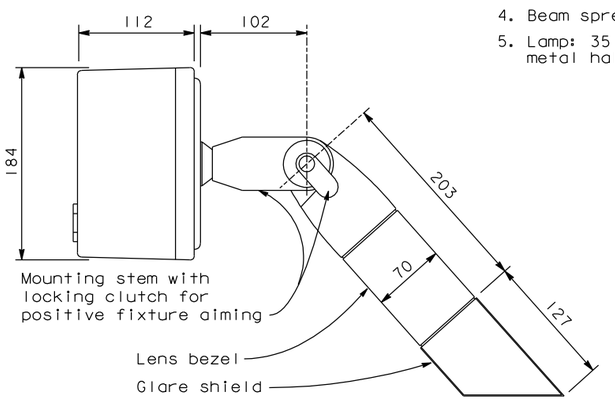

FIXTURE DETAIL
Not to scale

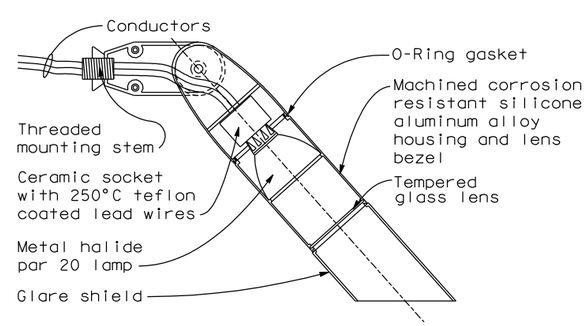

SECTION D-D
Not to scale

⚠ * * * POLES WILL BE STATE FURNISHED * * *
DETAILS ARE SHOWN IN CONTRACT NO. BATA 007

CONTRACT CHANGE ORDER NO. ____
SHEET ___ OF ___

REQUESTS FOR INFORMATION NOT ADDRESSED IN THIS CCO REMAIN IN FORCE

MARK	DATE	DESCRIPTIONS	BY	CH'D	CCO#
1	04/22/11	STATE FURNISHED LIGHT POLES	JB	TS	43S1

REVISIONS

DETAILS
SAS SUPERSTRUCTURE ROADWAY EASTBOUND TYPICAL BELVEDERE LIGHTING
SCALE AS NOTED

E-173

ALL DIMENSIONS ARE IN MILLIMETERS UNLESS OTHERWISE SHOWN.

CALCULATED/ DESIGNED BY	GAM	DATE 10/00	REVISED BY
CHECKED BY	TYL	10/00	DATE REVISED

DESIGN OVERSIGHT: BOB ZANDIPOUR

SAS STRUCTURE

STATE OF CALIFORNIA - DEPARTMENT OF TRANSPORTATION

Caltrans

LAST REVISION 04-19-00 | DATE PLOTTED => 21 APR 2011 | TIME PLOTTED => 11:32:22

FOR REDUCED PLANS ORIGINAL SCALE IN MILLIMETERS 0 20 40 60 80

FILE => I:\bb\04-012001\sas\contract plans and cco\cco\cco#43s1\2-update 04-22-11\dgn\40120fua173.dgn
USERNAME => DWinrow

CU 04251 | EA 0120F1