DIST	COUNTY	ROUTE	KILOMETER POST TOTAL PROJECT	SHEET NO.	TOTAL SHEETS
04	SF	80	13.2/13.9	147R1	1204

Caltrans Metric

REGISTERED ENGINEER-CIVIL

12-6-04
PLANS APPROVAL DATE

REGISTERED PROFESSIONAL ENGINEER T. W. SPARKS No. E16039 Exp. 9-30-11 ELECTRICAL STATE OF CALIFORNIA

The State of California or its officers or agents shall not be responsible for the accuracy or completeness of electronic copies of this plan sheet.

T.Y. LIN / MOFFATT & NICHOL
825 BATTERY STREET
SAN FRANCISCO, CA 94111

Caltrans now has a web site! To get to the web site, go to: http://www.dot.ca.gov

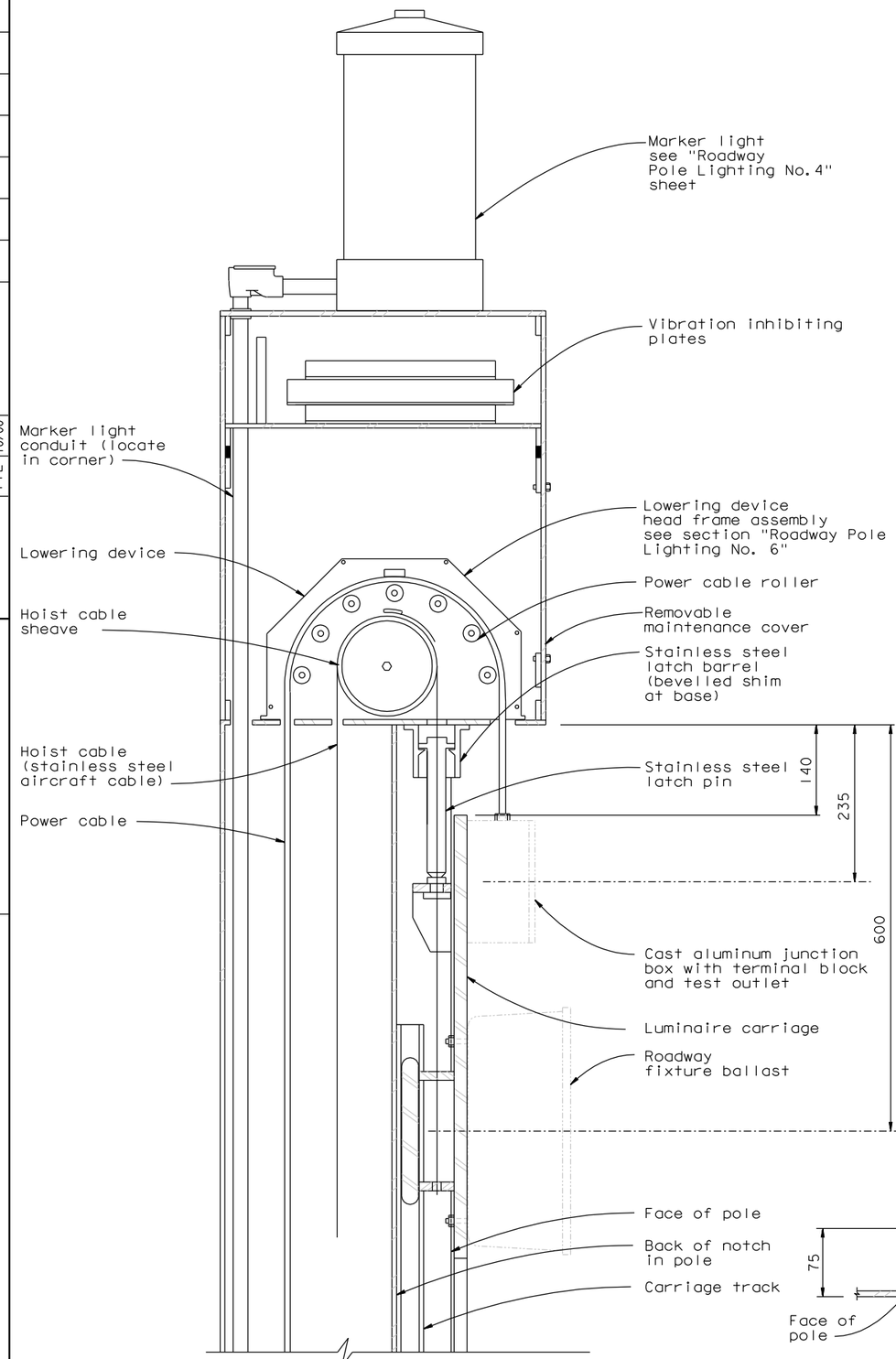

HEAD FRAME MOUNTING & CARRIAGE ASSEMBLY
Not to scale

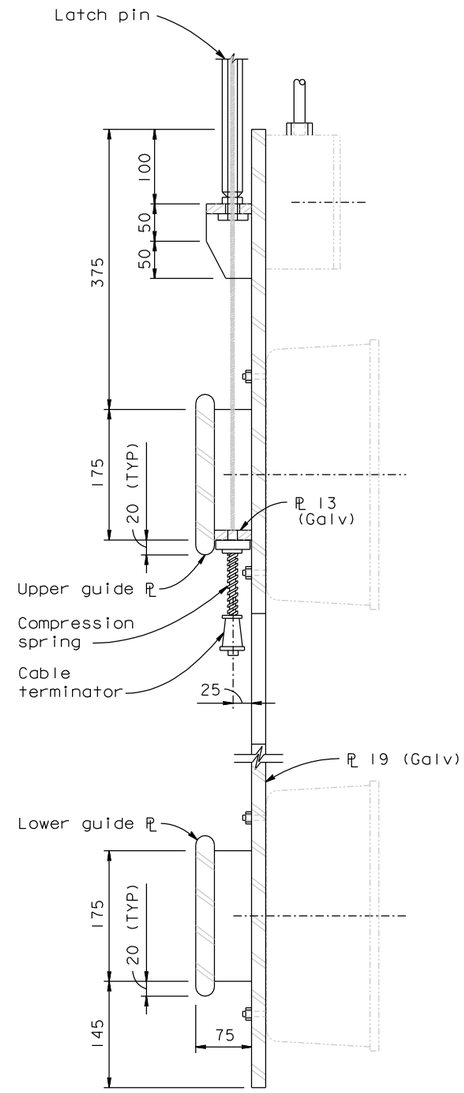

SECTION

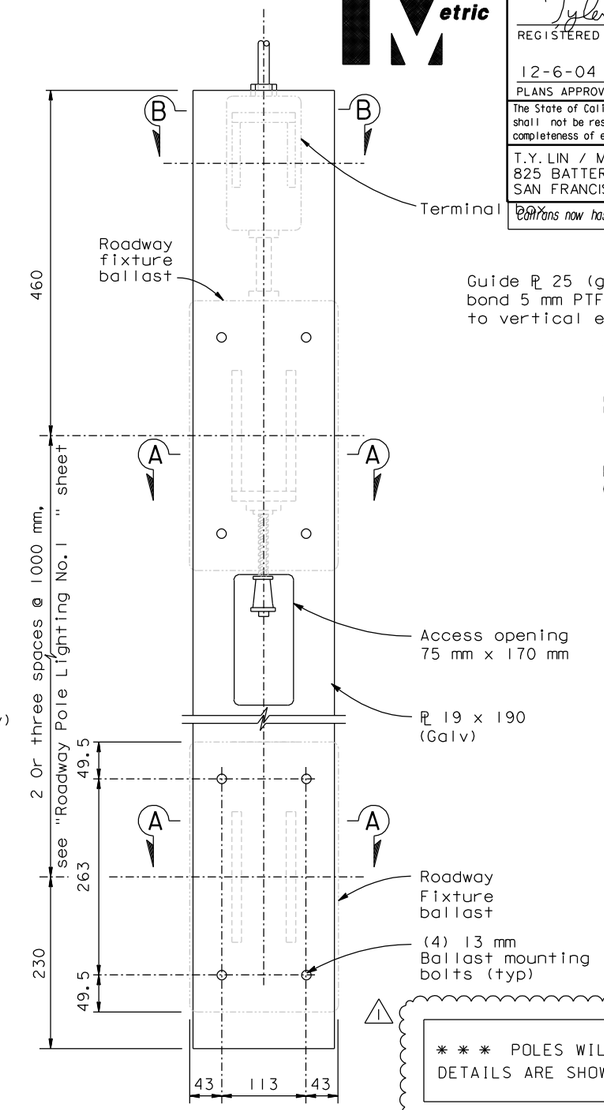

ELEVATION

LUMINAIRE FIXTURE CARRIAGE
1:4

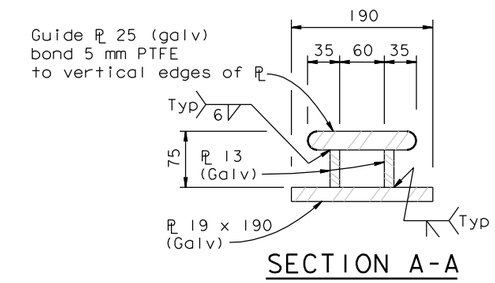

SECTION A-A
1:4

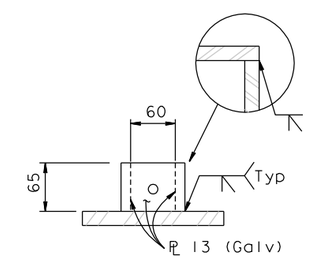

SECTION B-B
1:4

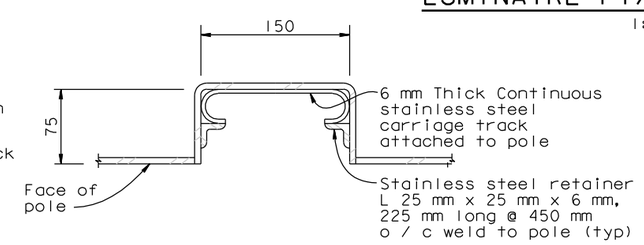

CARRIAGE TRACK
1:3

* * * POLES WILL BE STATE FURNISHED * * *
DETAILS ARE SHOWN IN CONTRACT NO. BATA 007

CONTRACT CHANGE ORDER NO. _____
SHEET ____ OF ____

REQUESTS FOR INFORMATION NOT ADDRESSED IN THIS CCO REMAIN IN FORCE

MARK	DATE	DESCRIPTIONS	BY	CH'D	CCO#
1	04/22/11	STATE FURNISHED LIGHT POLES	JB	TS	43S1

REVISIONS

DETAILS
SAS SUPERSTRUCTURE ROADWAY WESTBOUND
TYPICAL ROADWAY POLE 5

SCALE AS NOTED

ALL DIMENSIONS ARE IN MILLIMETERS UNLESS OTHERWISE SHOWN.

E-88

SAS STRUCTURE

STATE OF CALIFORNIA - DEPARTMENT OF TRANSPORTATION

Caltrans

CALCULATED/ DESIGNED BY	GAM	DATE 10/00	REVISED BY
CHECKED BY	TYL	10/00	DATE REVISED

DESIGN OVERSIGHT: BOB ZANDIPOUR

LAST REVISION 04-19-00
DATE PLOTTED => 21 APR 2011
TIME PLOTTED => 11:30:44

FOR REDUCED PLANS ORIGINAL SCALE IN MILLIMETERS 0 20 40 60 80

FILE => I:\bb\04-012001\sas\contract plans and cco\cco\cco#43s1\2-update 04-22-11\dgn\40120fua088.dgn
USERNAME => DWinrow

CU 04251 EA 0120F1