DIST	COUNTY	ROUTE	KILOMETER POST TOTAL PROJECT	SHEET No	TOTAL SHEETS
04	SF	80	13.2/13.9	77R1	1204

REGISTERED CIVIL ENGINEER 12/19/02 DATE

12-6-04
PLANS APPROVAL DATE

REGISTERED PROFESSIONAL ENGINEER Mee Shing Owyang No. 24960 Exp. 12/31/05 CIVIL STATE OF CALIFORNIA

The State of California or its officers or agents shall not be responsible for the accuracy or completeness of electronic copies of this plan sheet.

Parsons Brinckerhoff Quade & Douglas, Inc.
303 Second Street, Suite 700N
San Francisco, CA 94107

Caltrans now has a web site! To get to the web site, go to: http://www.dot.ca.gov

Caltrans Metric

NOTES:

1. The Contractor shall verify all controlling dimensions before ordering or fabricating any material.
2. All structural steel shall be AASHTO M270M Grade 36.
3. All welded connections shall conform to the requirements of AASHTO/AWS D1.5 Bridge Welding Code. Weld electrodes shall be E70XX.
4. All structural steel shall be hot-dipped galvanized.
5. See electrical plans for locations. Adjust locations to clear the stiffeners in bridge girder as needed.
6. To accommodate roadway slopes, support height may be adjusted by shimming to maintain the same horizontal elevation of cable tray when more than one support is required.
7. Detail is typical for Westbound and Eastbound
8. For cable tray installation and layout, see sheets E-126, E-126A, E-212 and E-212A. except as noted.

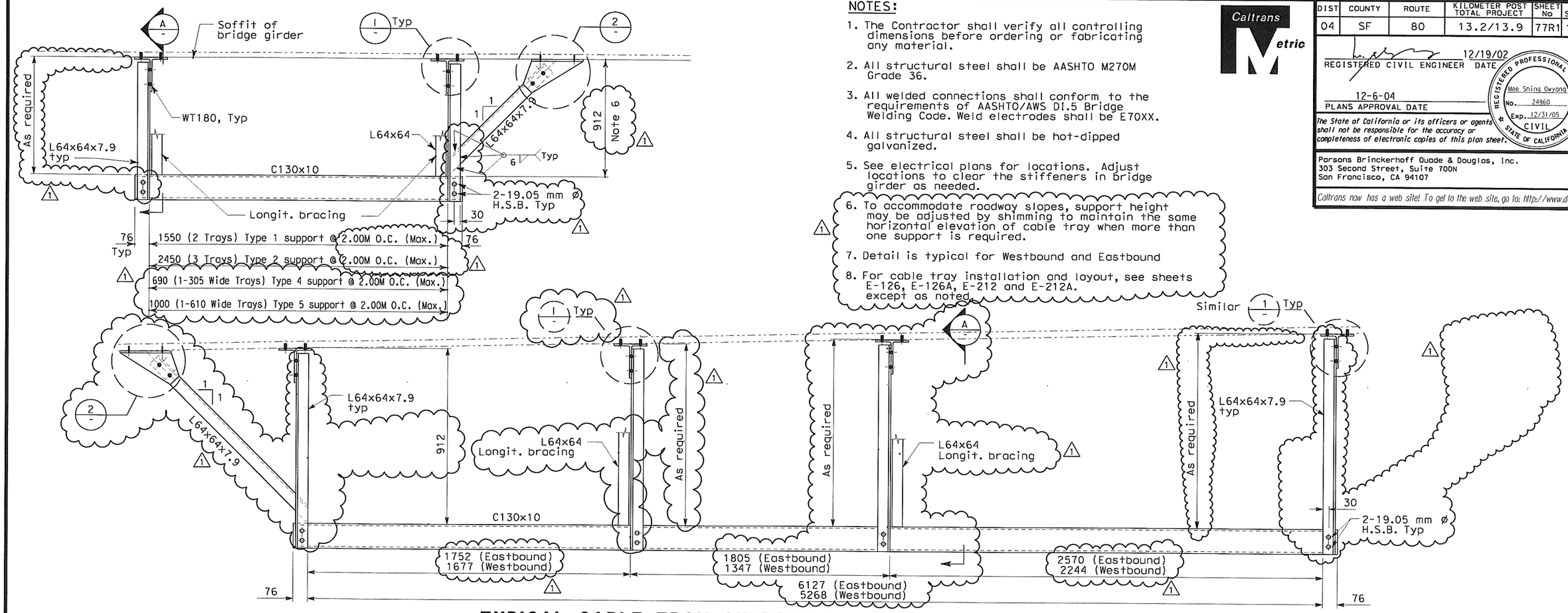

TYPICAL CABLE TRAY SUPPORT BELOW BRIDGE GIRDER (TYPE 3)

SCALE: 1:10

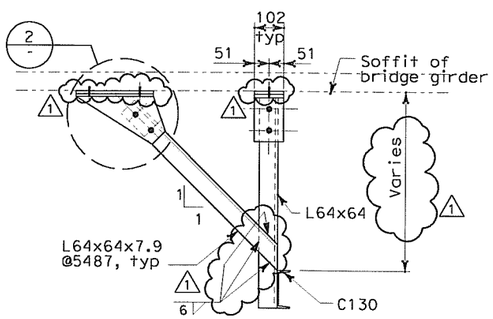

LONGITUDINAL BRACING

SECTION A
SCALE: 1:10

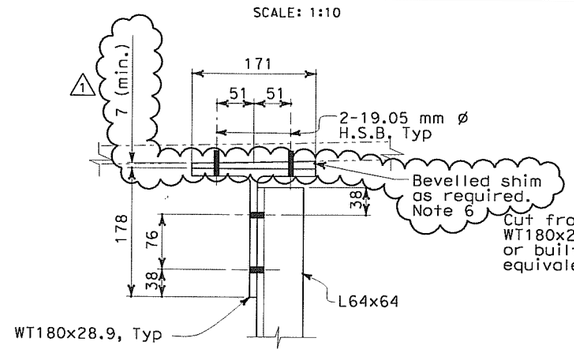

DETAIL 1
SCALE: 1:4

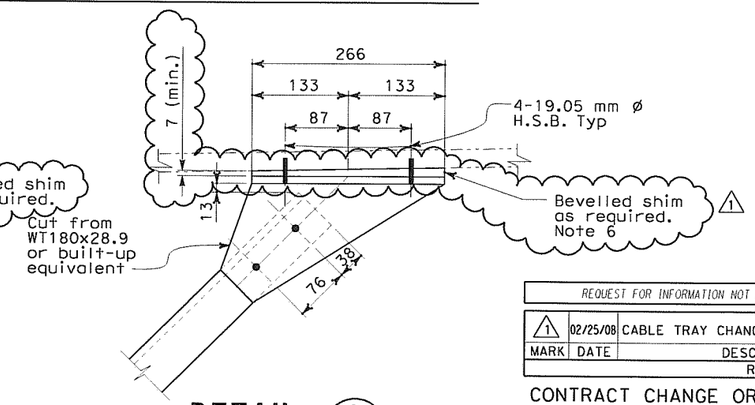

DETAIL 2
SCALE: 1:4

REGISTERED PROFESSIONAL ENGINEER Mee Shing Owyang No. 24960 Exp. 12/31/09 CIVIL STATE OF CALIFORNIA

FOR REVISION ONLY

REQUEST FOR INFORMATION NOT ADDRESSED IN THIS CCO REMAIN IN FORCE

MARK	DATE	DESCRIPTIONS	BY	CH'D	CCO#
1	02/25/08	CABLE TRAY CHANGES	RG	MSO	42S1

REVISIONS

CONTRACT CHANGE ORDER NO. _____
SHEET _____ OF _____

ALL DIMENSIONS ARE IN MILLIMETERS UNLESS OTHERWISE SHOWN

Bob Zandipour
DESIGN OVERSIGHT
4/4/04
SIGN OFF DATE

	BY	CHECKED
DESIGN	I. Horton	M. S. Owyang
DETAILS	D. Chin	M. S. Owyang
QUANTITIES	M. S. Owyang	L. Johnson

PREPARED FOR THE STATE OF CALIFORNIA DEPARTMENT OF TRANSPORTATION

Gene Lusherovich
PROJECT ENGINEER

BRIDGE NO. 34-0006
KILOMETER POST 13.2/13.9

SAS SUPERSTRUCTURE
MISCELLANEOUS SECTIONS AND DETAILS SHEET 2 OF 2

AS-7

SHEET 7 OF 16

DESIGN DETAIL SHEET (METRIC) (REV. 3/1/98)

ORIGINAL SCALE IN MILLIMETERS FOR REDUCED PLANS 0 10 20 30 40 50 60 70 80 90 100

CU 04251
EA 0120F1

DISREGARD PRINTS BEARING EARLIER REVISION DATES

REVISION DATES (PRELIMINARY STAGE ONLY)

FILE => T:\13103\MS\pse\SAS Struc\CCO\SAS CCO42S1\CCO 42S1 Final Submittal 2008-07-11\04-0120f1_0077R01.dgn

USERNAME => garciar DATE PLOTTED => 8/28/2008 TIME PLOTTED => 3:13:11 PM

$FREQUEST

DIST	COUNTY	ROUTE	KILOMETER POST TOTAL PROJECT	SHEET NO	TOTAL SHEETS
04	SF	80	13.2/13.9	80R1	1204

Caltrans Metric

4/2/04
REGISTERED CIVIL ENGINEER

12-6-04
PLANS APPROVAL DATE

REGISTERED PROFESSIONAL ENGINEER Mee Shing Owyang No. 24960 Exp. 12/31/07 CIVIL STATE OF CALIFORNIA

The State of California or its officers or agents shall not be responsible for the accuracy or completeness of electronic copies of this plan sheet.

Parsons Brinckerhoff Quade & Douglas, Inc.
303 Second Street, Suite 700N
San Francisco, CA 94107

Caltrans now has a web site! To get to the web site, go to: http://www.dot.ca.gov

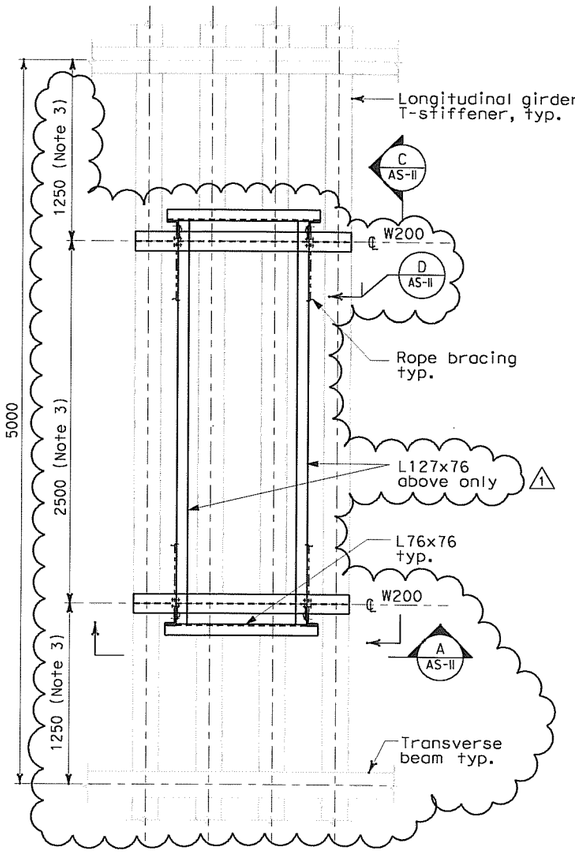

AT T-STIFFENERS

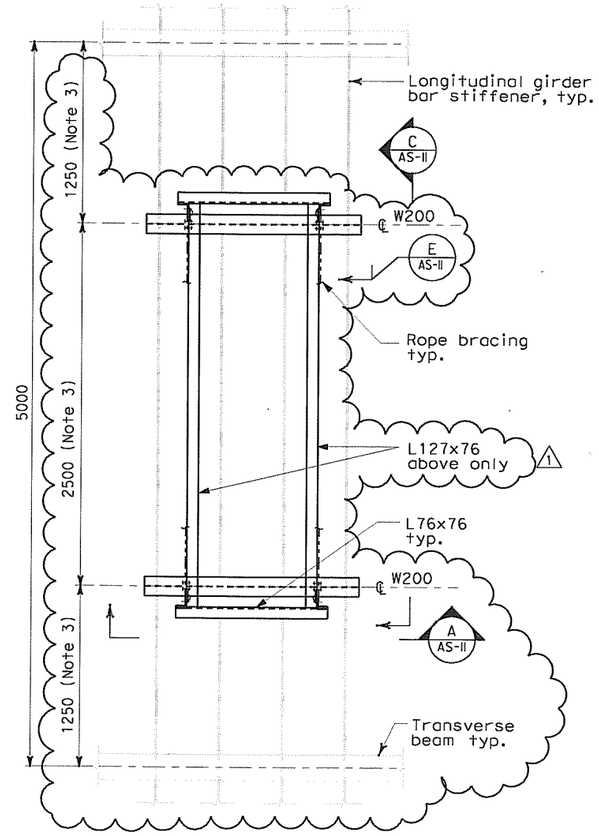

AT BAR-STIFFENERS

1

CABLE TRAY SUPPORT PLAN (TYPE I AND II) 1

SCALE 1:20

NOTES:

1. The contractor shall verify all controlling field dimensions before ordering or fabricating any material.
2. For structural notes, see sheet AS-1.
3. For cable tray support ~~locations, see electrical~~ plans and dwgs AS-16K through AS-16R. 1 1
4. For longitudinal girder stiffener sizes and locations, see SAS superstructure plan.

REGISTERED PROFESSIONAL ENGINEER Mee Shing Owyang No. 24960 Exp. 12/31/09 CIVIL STATE OF CALIFORNIA

FOR REVISION ONLY

REQUEST FOR INFORMATION NOT ADDRESSED IN THIS CCO REMAIN IN FORCE

MARK	DATE	DESCRIPTIONS	BY	CH'D	CCO#
1	02/25/08	CABLE TRAY CHANGES	RG	MSO	42S1

REVISIONS

CONTRACT CHANGE ORDER NO. _____
SHEET ____ OF ____

ALL DIMENSIONS ARE IN MILLIMETERS UNLESS OTHERWISE SHOWN

Bob Zandipour
DESIGN OVERSIGHT

SIGN OFF DATE

	BY	CHECKED
DESIGN	M. S. Owyang	R. Howell
DETAILS	D. Chin	M. S. Owyang
QUANTITIES	I. Horton	P. McNamee

PREPARED FOR THE STATE OF CALIFORNIA DEPARTMENT OF TRANSPORTATION

Gene Lusherovich
PROJECT ENGINEER

BRIDGE NO. 34-0006
KILOMETER POST 13.2/13.9

SAS SUPERSTRUCTURE
CABLE TRAY SUPPORT PLAN

AS-10

SHEET 10 OF 16

DESIGN DETAIL SHEET (METRIC) (REV. 3/1/98)

ORIGINAL SCALE IN MILLIMETERS FOR REDUCED PLANS 0 10 20 30 40 50 60 70 80 90 100

CU 04251
EA 0120F1

DISREGARD PRINTS BEARING EARLIER REVISION DATES

REVISION DATES (PRELIMINARY STAGE ONLY)

FILE => T:\13103\MS\pse\SAS Struc\CCO\SAS CCO42S1\CCO 42S1 Final Submittal 2008-07-11\04-0120f1_0080R01.dgn

USERNAME => gardar DATE PLOTTED => 8/28/2008 TIME PLOTTED => 3:15:36 PM

SFREQUEST

DIST	COUNTY	ROUTE	KILOMETER POST TOTAL PROJECT	SHEET No	TOTAL SHEETS
04	SF	80	13.2/13.9	81R1	1204

REGISTERED CIVIL ENGINEER 4/2/04 DATE

12-6-04
PLANS APPROVAL DATE

REGISTERED PROFESSIONAL ENGINEER Mee Shing Owyang No. 24960 Exp. 12/31/05 CIVIL STATE OF CALIFORNIA

The State of California or its officers or agents shall not be responsible for the accuracy or completeness of electronic copies of this plan sheet.

Parsons Brinckerhoff Quade & Douglas, Inc.
303 Second Street, Suite 700N
San Francisco, CA 94107

Caltrans now has a web site! To get to the web site, go to: http://www.dot.ca.gov

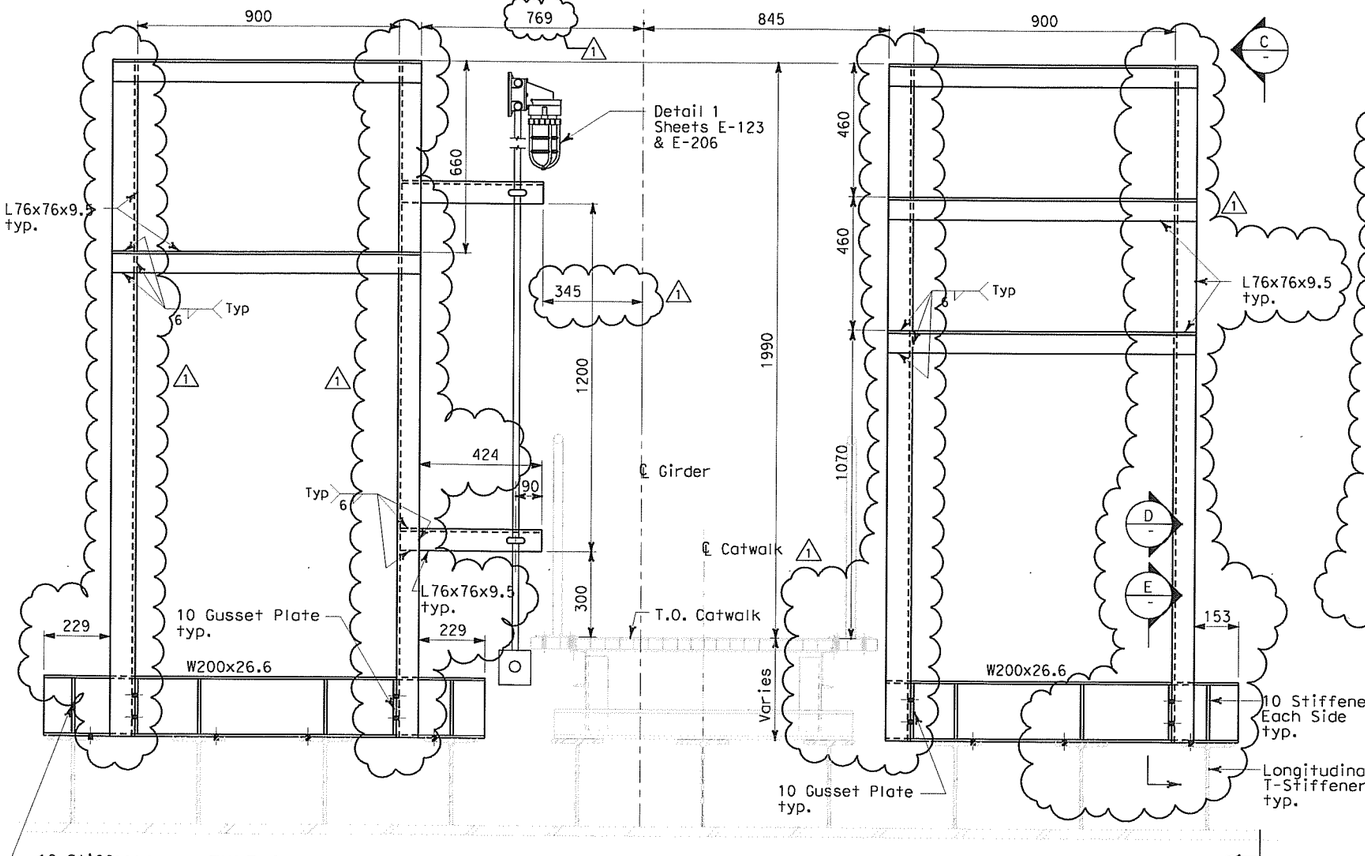

A AS-10 SECTION
SCALE: 1:10

NOTES:

1. The contractor shall verify all controlling field dimensions before ordering or fabricating any material.
2. For structural notes, see sheet AS-1.
3. For cable tray support locations, see electrical plans and dwgs AS-16K through AS-16R.

REQUEST FOR INFORMATION NOT ADDRESSED IN THIS CCO REMAIN IN FORCE					
1	02/25/08	CABLE TRAY CHANGES	RG	MSO	42S1
MARK	DATE	DESCRIPTIONS	BY	CH'D	CCO#
		REVISIONS			

CONTRACT CHANGE ORDER NO. _____
SHEET _____ OF _____

REGISTERED PROFESSIONAL ENGINEER Mee Shing Owyang No. 24960 Exp. 12/31/09 CIVIL STATE OF CALIFORNIA

FOR REVISION ONLY

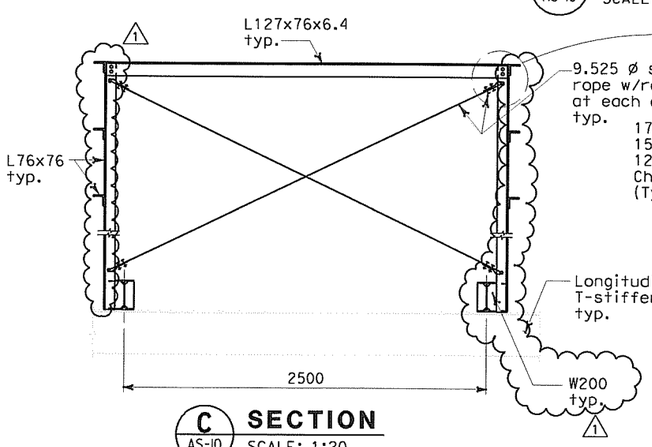

C AS-10 SECTION
SCALE: 1:20

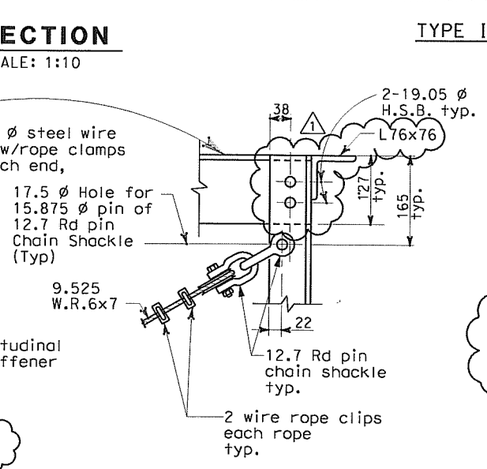

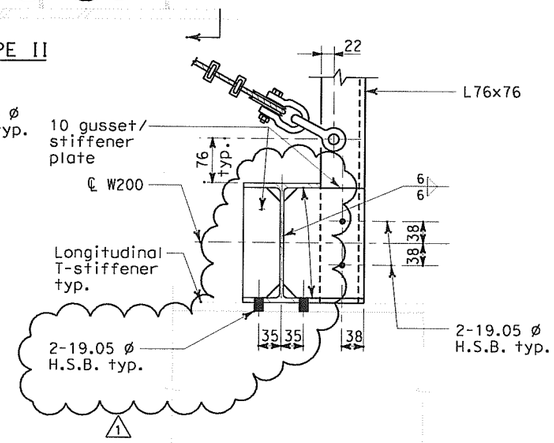

D AS-10 SECTION
SCALE: 1:5
(T-Stiffener)

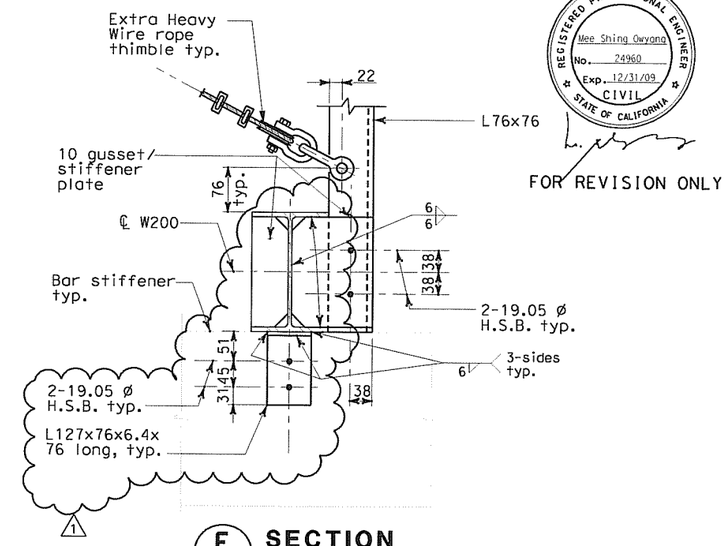

E AS-10 SECTION
SCALE: 1:5
(Bar Stiffener)

ALL DIMENSIONS ARE IN
MILLIMETERS UNLESS OTHERWISE SHOWN

Bob Zandipour
DESIGN OVERSIGHT

SIGN OFF DATE

DESIGN DETAIL SHEET (METRIC) (REV. 3/1/98)

	BY	CHECKED
DESIGN	I. Horton	M. S. Owyang
DETAILS	D. Chin	M. S. Owyang
QUANTITIES	I. Horton	P. McNamee

PREPARED FOR THE
STATE OF CALIFORNIA
DEPARTMENT OF TRANSPORTATION

Gene Lusherovich
PROJECT ENGINEER

BRIDGE NO. 34-0006
KILOMETER POST 13.2/13.9

SAS SUPERSTRUCTURE
CABLE TRAY SUPPORT DETAIL

AS-11

SHEET 11 OF 16

ORIGINAL SCALE IN MILLIMETERS FOR REDUCED PLANS 0 10 20 30 40 50 60 70 80 90 100

CU 04251
EA 0120F1

DISREGARD PRINTS BEARING EARLIER REVISION DATES

REVISION DATES (PRELIMINARY STAGE ONLY)

FILE => T:\13103\MS\pse\SAS Struc\CCO\SAS CC04251\CCO 42S1 Final Submittal 2008-07-11\04-0120f1_0081R01.dgn

USERNAME => garciar DATE PLOTTED => 8/28/2008 TIME PLOTTED => 3:18:05 PM

$FREQUEST

DIST	COUNTY	ROUTE	KILOMETER POST TOTAL PROJECT	SHEET No	TOTAL SHEETS
04	SF	80	13.2/13.9	84R1	1204

Caltrans Metric

REGISTERED CIVIL ENGINEER 4/2/04 DATE

12-6-04
PLANS APPROVAL DATE

REGISTERED PROFESSIONAL ENGINEER Mee Shing Owyang No. 24960 Exp. 12/31/05 CIVIL STATE OF CALIFORNIA

The State of California or its officers or agents shall not be responsible for the accuracy or completeness of electronic copies of this plan sheet.

Parsons Brinckerhoff Quade & Douglas, Inc.
303 Second Street, Suite 700N
San Francisco, CA 94107

Caltrans now has a web site! To get to the web site, go to: http://www.dot.ca.gov

REQUEST FOR INFORMATION NOT ADDRESSED IN THIS CCO REMAIN IN FORCE

MARK	DATE	DESCRIPTIONS	BY	CH'D	CCO#
1	02/25/08	CABLE TRAY CHANGES	RG	MSO	42S1

REVISIONS

CONTRACT CHANGE ORDER NO. _____
SHEET _____ OF _____

REGISTERED PROFESSIONAL ENGINEER Mee Shing Owyang No. 24960 Exp. 12/31/09 CIVIL STATE OF CALIFORNIA

FOR REVISION ONLY

NOTES:

1. The contractor shall verify all controlling field dimensions before ordering or fabricating any material.
2. For structural notes, see sheet AS-1.
3. For cable tray support locations, see electrical plans and dwgs AS-16K through AS-16R.
4. For details not shown, see sheet AS-11.
5. For cable tray installation and layout, see sheets E124A, E-124B, E-207A, E-207B and E-207C.
6. Type V W200 are mounted on 3 longitudinal stiffeners at PP41 and on 2 longitudinal stiffeners at PP14, PP32, PP50, PP80 and PP110.

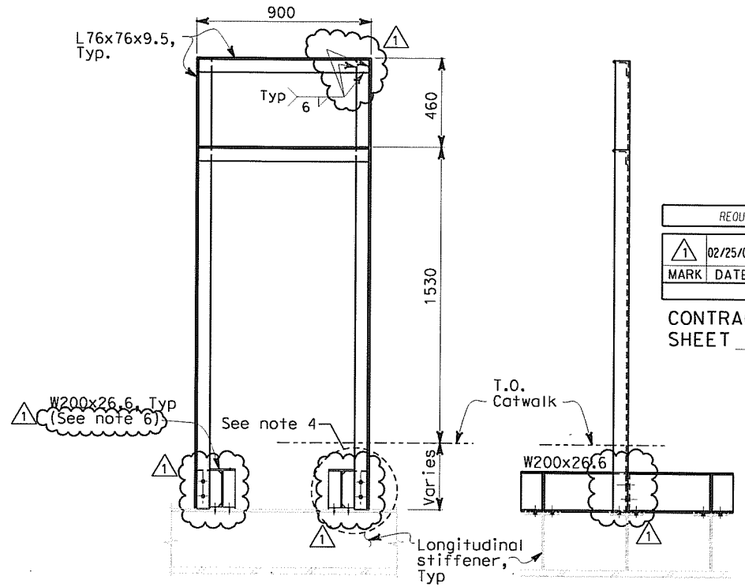

FRONT VIEW SIDE VIEW

TYPE V
SCALE: 1:15

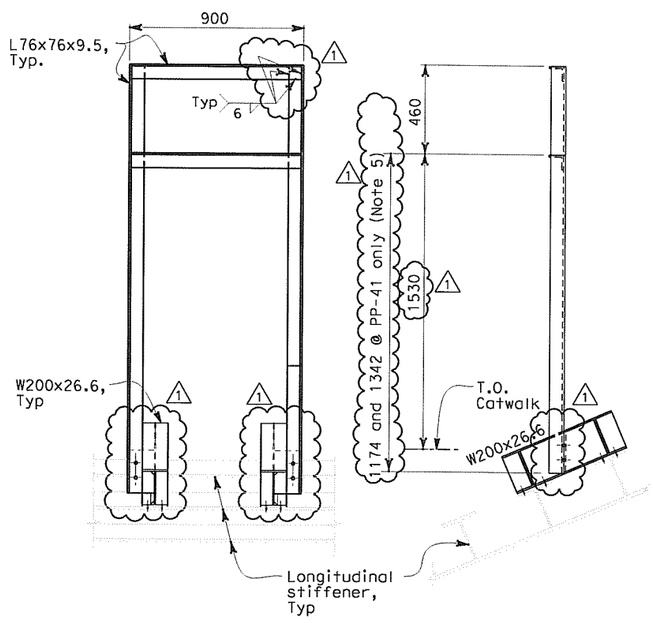

FRONT VIEW SIDE VIEW

TYPE VI
SCALE: 1:15

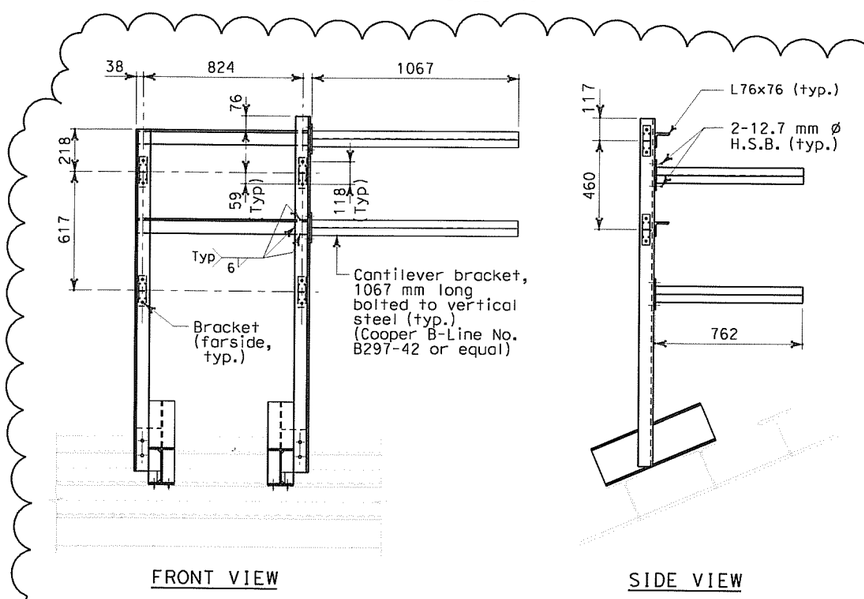

FRONT VIEW SIDE VIEW

TYPE VI (MODIFIED)
PP 14 ONLY
SCALE: 1:15

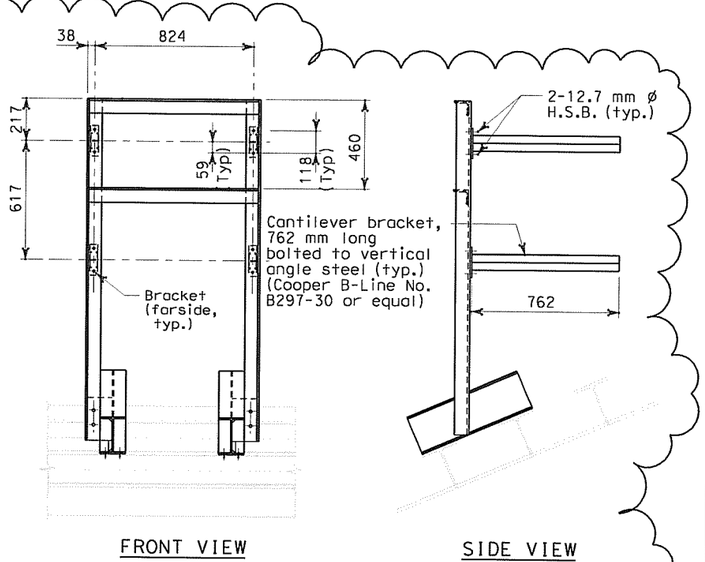

FRONT VIEW SIDE VIEW

TYPE VI
PP 32, PP 50, PP 80 AND PP 110
SCALE: 1:15

ALL DIMENSIONS ARE IN MILLIMETERS UNLESS OTHERWISE SHOWN

Bob Zandipour
DESIGN OVERSIGHT

SIGN OFF DATE

DESIGN	BY I. Horton	CHECKED M. S. Owyang
DETAILS	BY D. Chin	CHECKED M. S. Owyang
QUANTITIES	BY I. Horton	CHECKED P. McNamee

PREPARED FOR THE STATE OF CALIFORNIA DEPARTMENT OF TRANSPORTATION

Gene Lusherovich
PROJECT ENGINEER

BRIDGE NO. 34-0006
KILOMETER POST 13.2/13.9

SAS SUPERSTRUCTURE
CABLE TRAY SUPPORT DETAIL

AS-14

SHEET 14 OF 16

DESIGN DETAIL SHEET (METRIC) (REV. 3/1/98)

ORIGINAL SCALE IN MILLIMETERS FOR REDUCED PLANS 0 10 20 30 40 50 60 70 80 90 100

CU 04251
EA 0120F1

DISREGARD PRINTS BEARING EARLIER REVISION DATES

REVISION DATES (PRELIMINARY STAGE ONLY)

FILE => T:\13103\MS\pse\SAS Struc\CCO\SAS CCO42S1\CCO 42S1 Final Submittal 2008-07-11\04-0120f1_0084R01.dgn

USERNAME => garctor DATE PLOTTED => 8/28/2008 TIME PLOTTED => 3:20:14 PM

SF REQUEST

DIST	COUNTY	ROUTE	KILOMETER POST TOTAL PROJECT	SHEET No	TOTAL SHEETS
04	SF	80	13.2/13.9	85R1	1204

REGISTERED CIVIL ENGINEER 4/2/04 DATE

12-6-04
PLANS APPROVAL DATE

REGISTERED PROFESSIONAL ENGINEER Mee Shing Owyang No. 24960 Exp. 12/31/07 CIVIL STATE OF CALIFORNIA

The State of California or its officers or agents shall not be responsible for the accuracy or completeness of electronic copies of this plan sheet.

Parsons Brinckerhoff Quade & Douglas, Inc.
303 Second Street, Suite 700N
San Francisco, CA 94107

Caltrans now has a web site! To get to the web site, go to: http://www.dot.ca.gov

Caltrans Metric

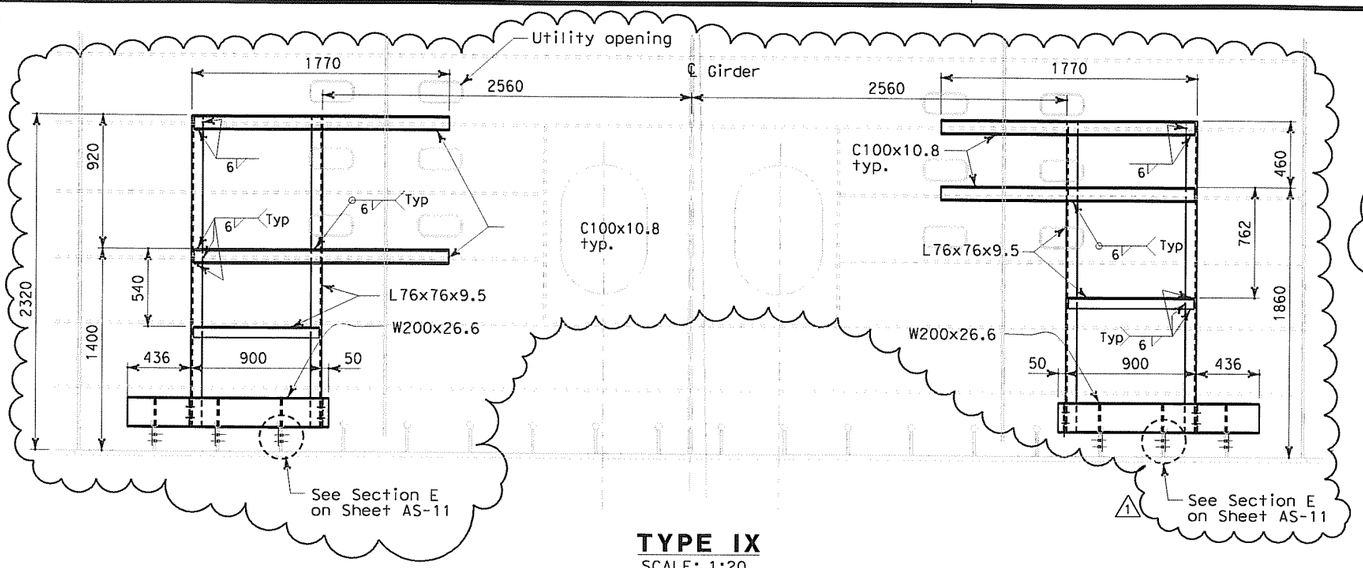

TYPE IX
SCALE: 1:20

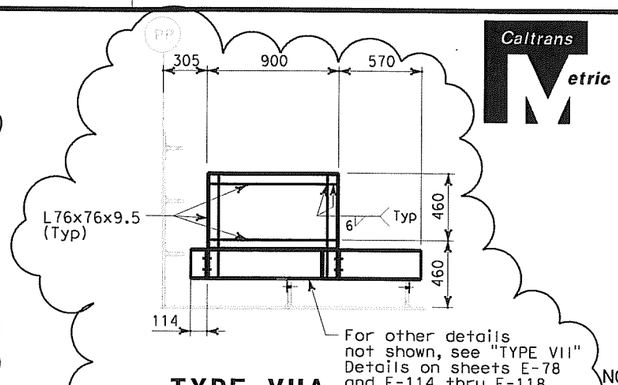

TYPE VIIA
SCALE: 1:20

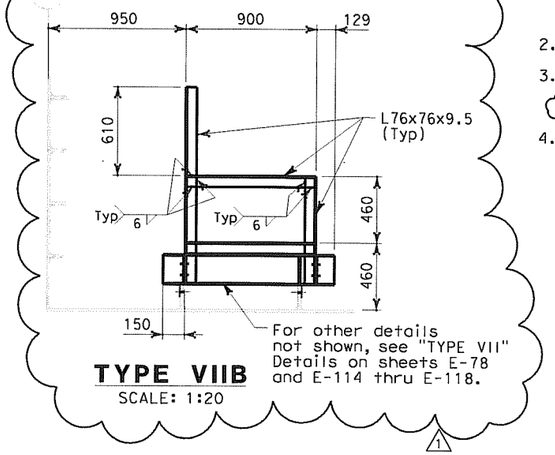

TYPE VIIB
SCALE: 1:20

NOTES:

1. The contractor shall verify all controlling field dimensions before ordering or fabricating any material.
2. For structural notes, see sheet AS-1.
3. For cable tray support locations, see electrical plans and dwgs AS-16K through AS-16R.
4. For details not shown, see sheet AS-11.

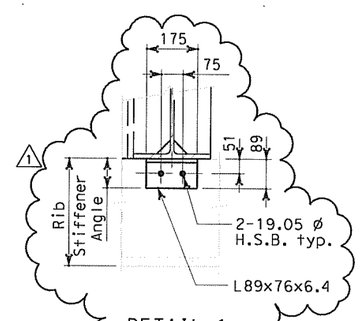

DETAIL 1
NOT TO SCALE

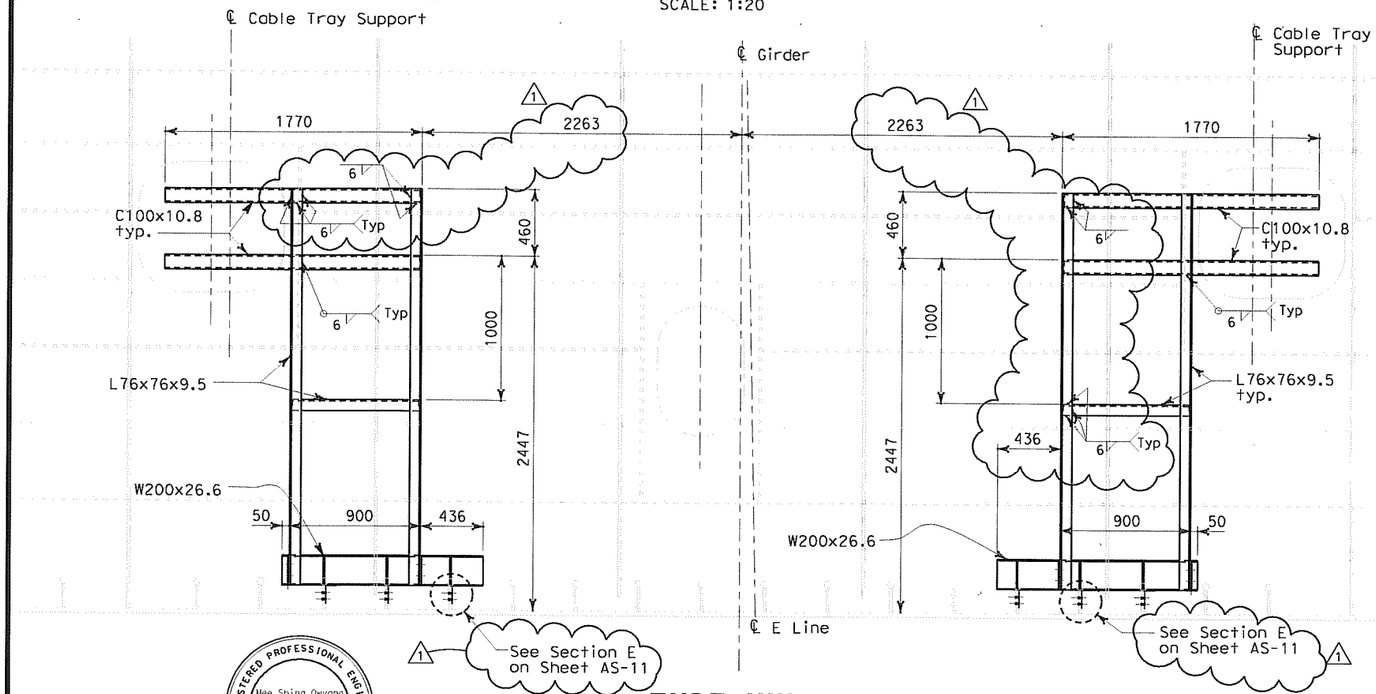

TYPE VIII
SCALE: 1:20

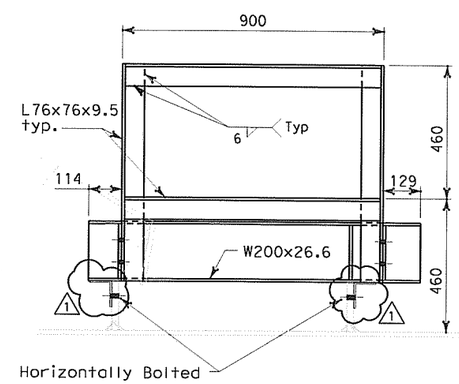

FRONT VIEW

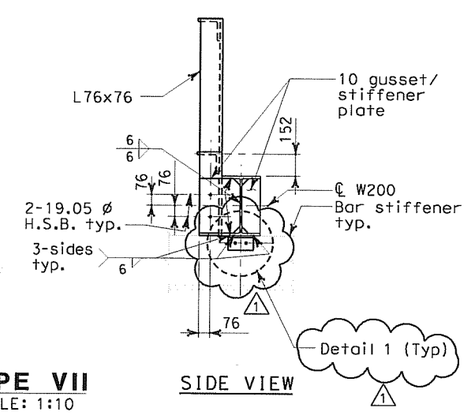

SIDE VIEW

TYPE VII
SCALE: 1:10

ALL DIMENSIONS ARE IN MILLIMETERS UNLESS OTHERWISE SHOWN

REGISTERED PROFESSIONAL ENGINEER Mee Shing Owyang No. 24960 Exp. 12/31/09 CIVIL STATE OF CALIFORNIA

FOR REVISION ONLY

REQUEST FOR INFORMATION NOT ADDRESSED IN THIS CCO REMAIN IN FORCE

MARK	DATE	DESCRIPTIONS	BY	CH'D	CCO#
1	02/25/08	CABLE TRAY CHANGES	TW	MSO	42S1

REVISIONS

CONTRACT CHANGE ORDER NO. _____
SHEET _____ OF _____

Bob Zandipour
DESIGN OVERSIGHT
4-14-04
SIGN OFF DATE

	BY	CHECKED
DESIGN	I. Horton	M. S. Owyang
DETAILS	D. Chin	M. S. Owyang
QUANTITIES	I. Horton	P. McNamee

PREPARED FOR THE STATE OF CALIFORNIA DEPARTMENT OF TRANSPORTATION

Gene Lusherovich
PROJECT ENGINEER

BRIDGE NO. 34-0006
KILOMETER POST 13.2/13.9

SAS SUPERSTRUCTURE
CABLE TRAY SUPPORT DETAIL
AS-15

SHEET 15 OF 16

DISREGARD PRINTS BEARING EARLIER REVISION DATES

REVISION DATES (PRELIMINARY STAGE ONLY)

CU 04251
EA 0120F1

DESIGN DETAIL SHEET (METRIC) (REV. 3/1/98)

ORIGINAL SCALE IN MILLIMETERS FOR REDUCED PLANS 0 10 20 30 40 50 60 70 80 90 100

FILE => T:\13103\MS\pse\SAS Struc\CCO\SAS CCO42S1\CCO 42S1 Final Submittal 2008-07-11\04-0120f1_0085R01.dgn

USERNAME => garciar DATE PLOTTED => 8/28/2008 TIME PLOTTED => 3:22:34 PM

$FREQUEST

DIST	COUNTY	ROUTE	KILOMETER POST TOTAL PROJECT	SHEET No	TOTAL SHEETS
04	SF	80	13.2/13.9	86R1	1204

REGISTERED CIVIL ENGINEER 4/2/04 DATE

12-6-04
PLANS APPROVAL DATE

REGISTERED PROFESSIONAL ENGINEER Mee Shing Owyang No. 24960 Exp. 12/31/07 CIVIL STATE OF CALIFORNIA

The State of California or its officers or agents shall not be responsible for the accuracy or completeness of electronic copies of this plan sheet.

Parsons Brinckerhoff Quade & Douglas, Inc.
303 Second Street, Suite 700N
San Francisco, CA 94107

Caltrans now has a web site! To get to the web site, go to http://www.dot.ca.gov

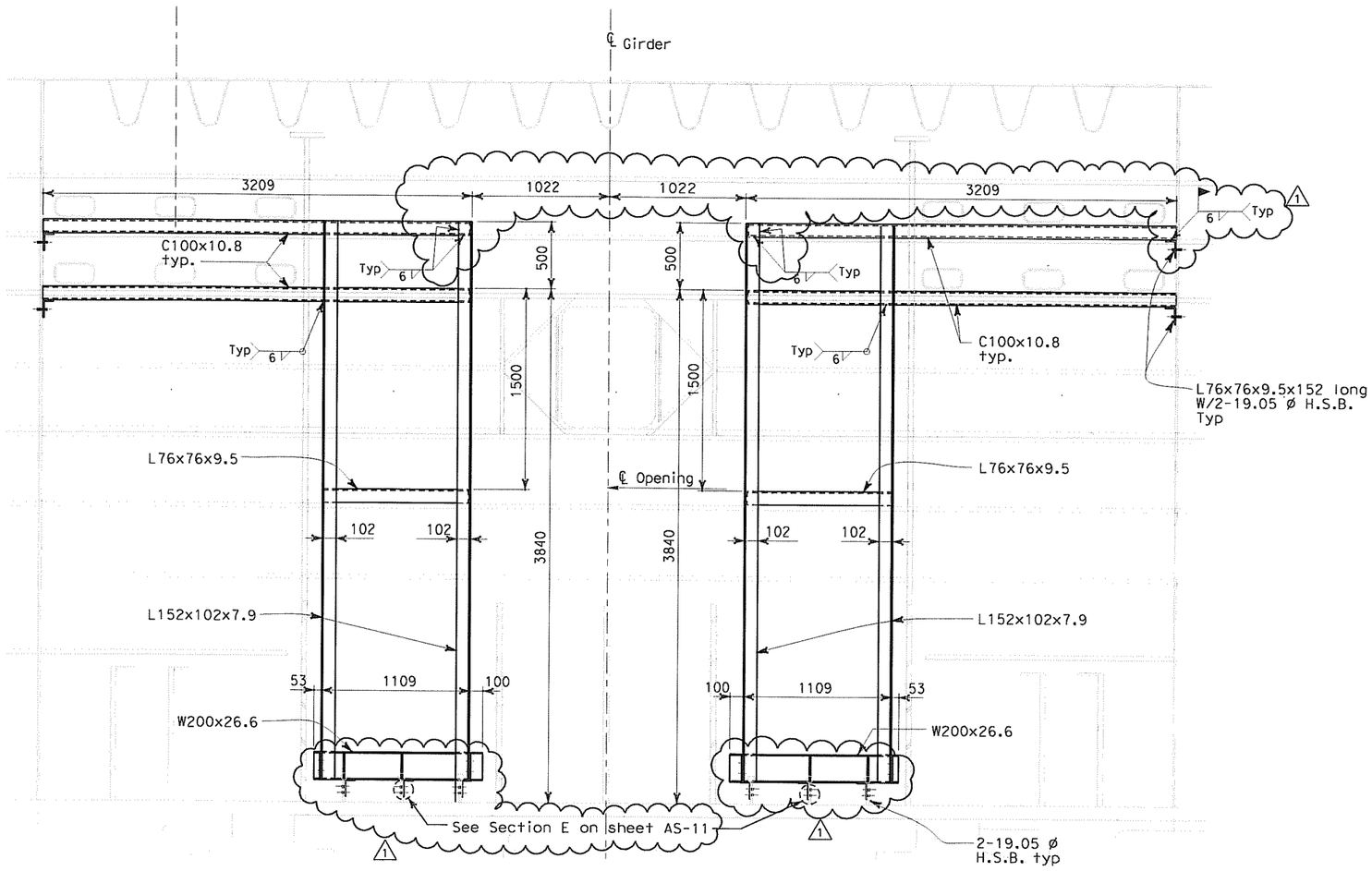

TYPE X
SCALE: 1:20

NOTES:

1. The contractor shall verify all controlling field dimensions before ordering or fabricating any material.
2. For structural notes, see sheet AS-1.
3. For cable tray support locations, see electrical plans and drawings AS-16K through AS-16R. (1)
4. For details not shown, see sheet AS-11.

REGISTERED PROFESSIONAL ENGINEER Mee Shing Owyang No. 24960 Exp. 12/31/09 CIVIL STATE OF CALIFORNIA

FOR REVISION ONLY

REQUEST FOR INFORMATION NOT ADDRESSED IN THIS CCO REMAIN IN FORCE

MARK	DATE	DESCRIPTIONS	BY	CH'D	CCO#
1	02/25/08	CABLE TRAY CHANGES	TW	MSO	42S1

REVISIONS

CONTRACT CHANGE ORDER NO. _____
SHEET ____ OF ____

ALL DIMENSIONS ARE IN MILLIMETERS UNLESS OTHERWISE SHOWN

DESIGN OVERSIGHT
SIGN OFF DATE

	BY	CHECKED
DESIGN	I. Horton	M. S. Owyang
DETAILS	D. Chin	M. S. Owyang
QUANTITIES	I. Horton	P. McNamee

PREPARED FOR THE STATE OF CALIFORNIA DEPARTMENT OF TRANSPORTATION

PROJECT ENGINEER

BRIDGE NO.
KILOMETER POST

SAS SUPERSTRUCTURE
CABLE TRAY SUPPORT DETAIL
AS-16

DESIGN DETAIL SHEET (METRIC) (REV. 3/1/98)

ORIGINAL SCALE IN MILLIMETERS FOR REDUCED PLANS 0 10 20 30 40 50 60 70 80 90 100

CU 04251
EA 0120F1

DISREGARD PRINTS BEARING EARLIER REVISION DATES

REVISION DATES (PRELIMINARY STAGE ONLY)

SHEET 16 OF 16

FILE => T:\13103\MS\pse\SAS Struc\CCO\SAS CCO42S1\CCO 42S1 Final Submittal 2008-07-11\04-0120f1_0086R01.dgn

USERNAME => gorcior DATE PLOTTED => 8/28/2008 TIME PLOTTED => 3:24:27 PM

$FREQUEST

DIST	COUNTY	ROUTE	KILOMETER POST TOTAL PROJECT	SHEET No	TOTAL SHEETS
04	SF	80	13.2/13.9	86S1	1204

REGISTERED CIVIL ENGINEER 2/22/08 DATE

PLANS APPROVAL DATE

REGISTERED PROFESSIONAL ENGINEER Lawrence M. Johnson No. C 44006 Exp. 6/30/09 CIVIL STATE OF CALIFORNIA

The State of California or its officers or agents shall not be responsible for the accuracy or completeness of electronic copies of this plan sheet.

Parsons Brinckerhoff Quade & Douglas, Inc.
303 Second Street, Suite 700N
San Francisco, CA 94107

Caltrans now has a web site! To get to the web site, go to: http://www.dot.ca.gov

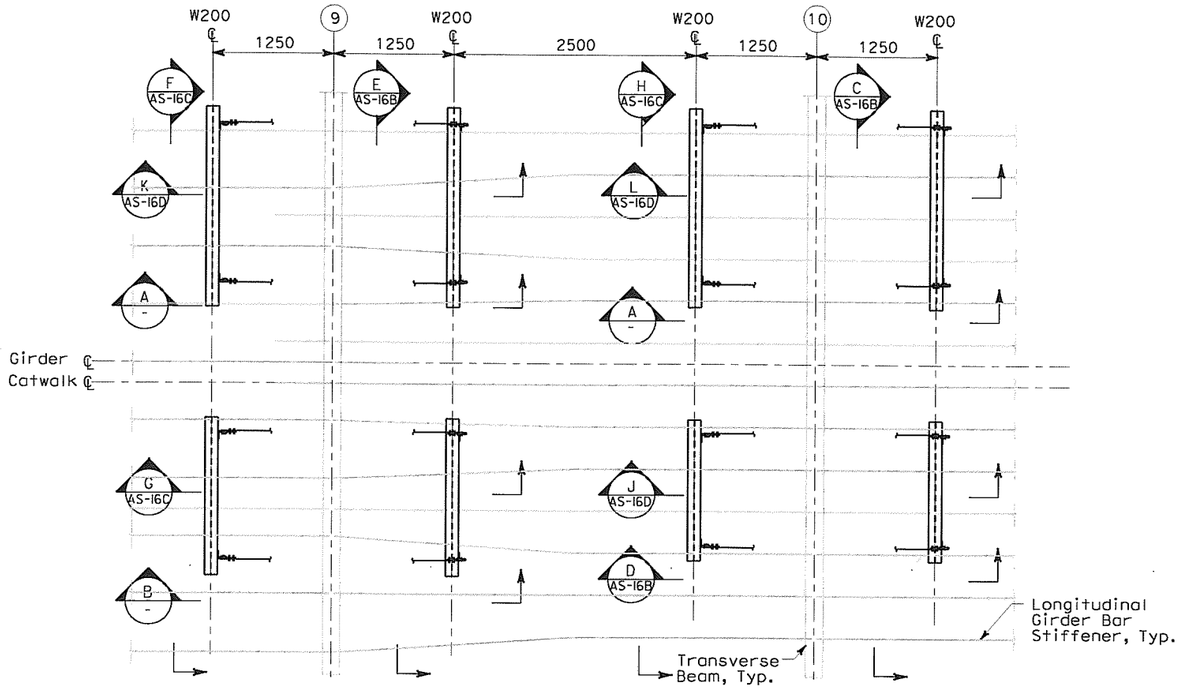

WESTBOUND CABLE SUPPORT PLAN - PANEL POINTS 9 AND 10

SCALE: 1:30

NOTES:

1. For structural notes, see sheet AS-1.
2. For cable tray support locations, see electrical plans and dwgs AS-16K and AS-16R.

REQUEST FOR INFORMATION NOT ADDRESSED IN THIS CCO REMAIN IN FORCE					
0	02/25/08	CABLE TRAY CHANGES	TW	LMJ	42S1
MARK	DATE	DESCRIPTIONS	BY	CH'D	CCO#
REVISIONS					

CONTRACT CHANGE ORDER NO. _____
SHEET _____ OF _____

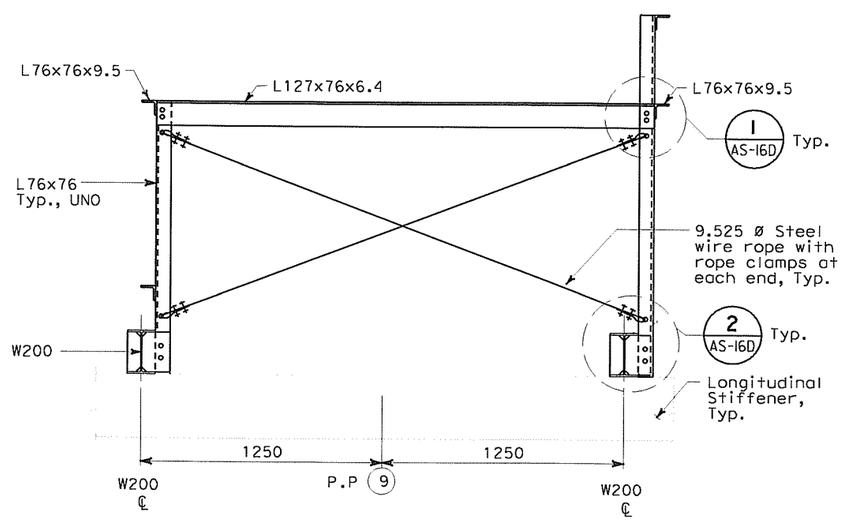

B - SECTION
SCALE: 1:15

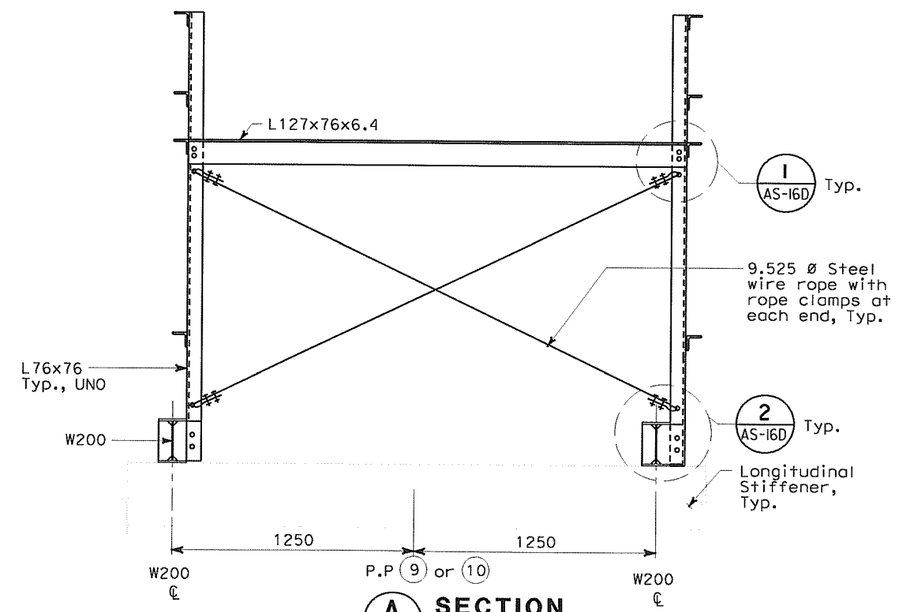

A - SECTION
SCALE: 1:15

ALL DIMENSIONS ARE IN MILLIMETERS UNLESS OTHERWISE SHOWN

Bob Zandipour
DESIGN OVERSIGHT
SIGN OFF DATE

	BY	CHECKED
DESIGN	L. Johnson	M. S. Owyang
DETAILS	A. Antonio	L. Johnson
QUANTITIES	L. Johnson	P. McNamee

PREPARED FOR THE STATE OF CALIFORNIA DEPARTMENT OF TRANSPORTATION

Gene Lusherovich
PROJECT ENGINEER

BRIDGE NO. 34-0006
KILOMETER POST 13.2/13.9

SAS SUPERSTRUCTURE

WESTBOUND CABLE TRAY SUPPORT DETAILS AT PP 9 AND PP 10 - SHEET 1 OF 4

AS-16A

SHEET 16A OF 16

CU 04251
EA 0120F1

DISREGARD PRINTS BEARING EARLIER REVISION DATES

REVISION DATES (PRELIMINARY STAGE ONLY)

DESIGN DETAIL SHEET (METRIC) (REV. 3/1/98)

ORIGINAL SCALE IN MILLIMETERS FOR REDUCED PLANS 0 10 20 30 40 50 60 70 80 90 100

FILE => T:\13103\MS\pse\SAS Struc\CCO\SAS CCO42S1\CCO 42S1 Final Submittal 2008-07-11\04-0120f1_0086S01.dgn

USERNAME => lflorico DATE PLOTTED => 7/21/2008 TIME PLOTTED => 2:56:40 PM

$FREQUEST

DIST	COUNTY	ROUTE	KILOMETER POST TOTAL PROJECT	SHEET No	TOTAL SHEETS
04	SF	80	13.2/13.9	86S2	1204

REGISTERED CIVIL ENGINEER 2/22/08 DATE

PLANS APPROVAL DATE

REGISTERED PROFESSIONAL ENGINEER Lawrence M. Johnson No. C 44006 Exp. 6/30/09 CIVIL STATE OF CALIFORNIA

The State of California or its officers or agents shall not be responsible for the accuracy or completeness of electronic copies of this plan sheet.

Parsons Brinckerhoff Quade & Douglas, Inc.
303 Second Street, Suite 700N
San Francisco, CA 94107

Caltrans now has a web site! To get to the web site, go to: http://www.dot.ca.gov

REQUEST FOR INFORMATION NOT ADDRESSED IN THIS CCO REMAIN IN FORCE					
1	02/25/08	CABLE TRAY CHANGES	TW	LMJ	42S1
MARK	DATE	DESCRIPTIONS	BY	CH'D	CCO#
		REVISIONS			

CONTRACT CHANGE ORDER NO._____
SHEET_____ OF _____

NOTES:

1. For structural notes, see sheet AS-1.
2. For cable tray support locations, see electrical plans and dwgs AS-16K and AS-R.

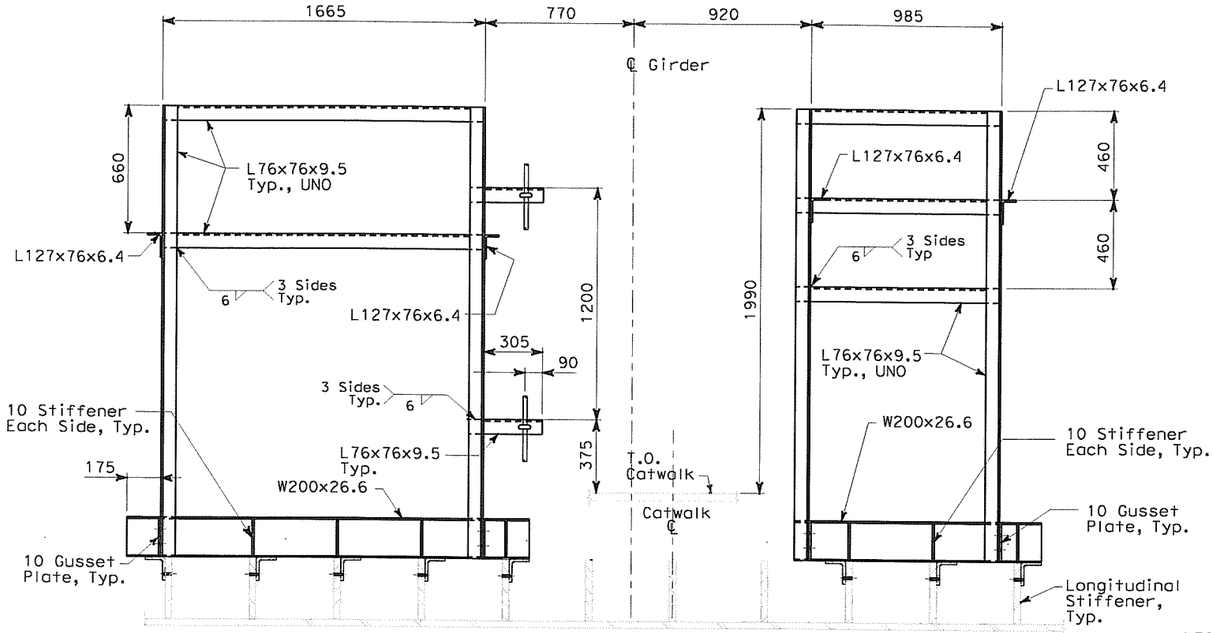

C AS-16A **SECTION** SCALE: 1:15

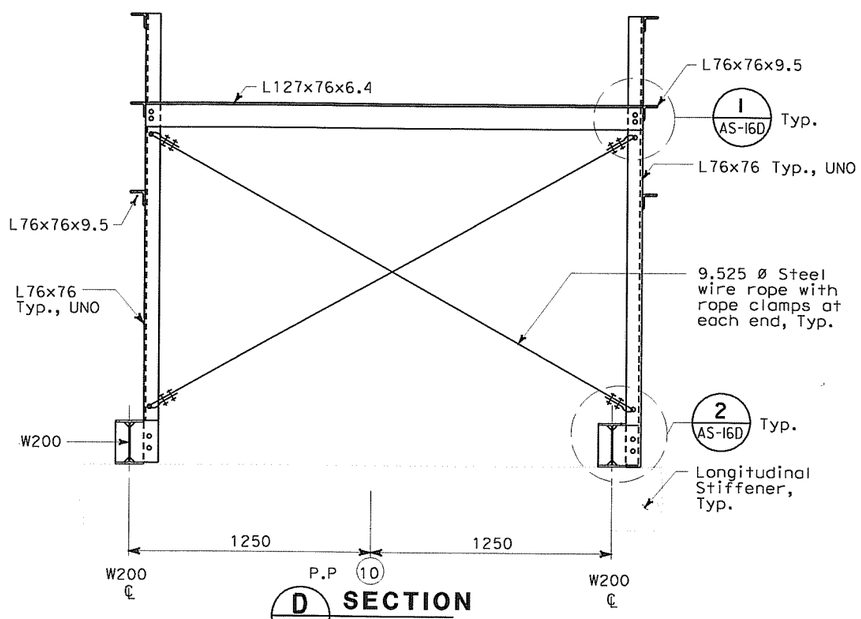

D AS-16A **SECTION** SCALE: 1:15

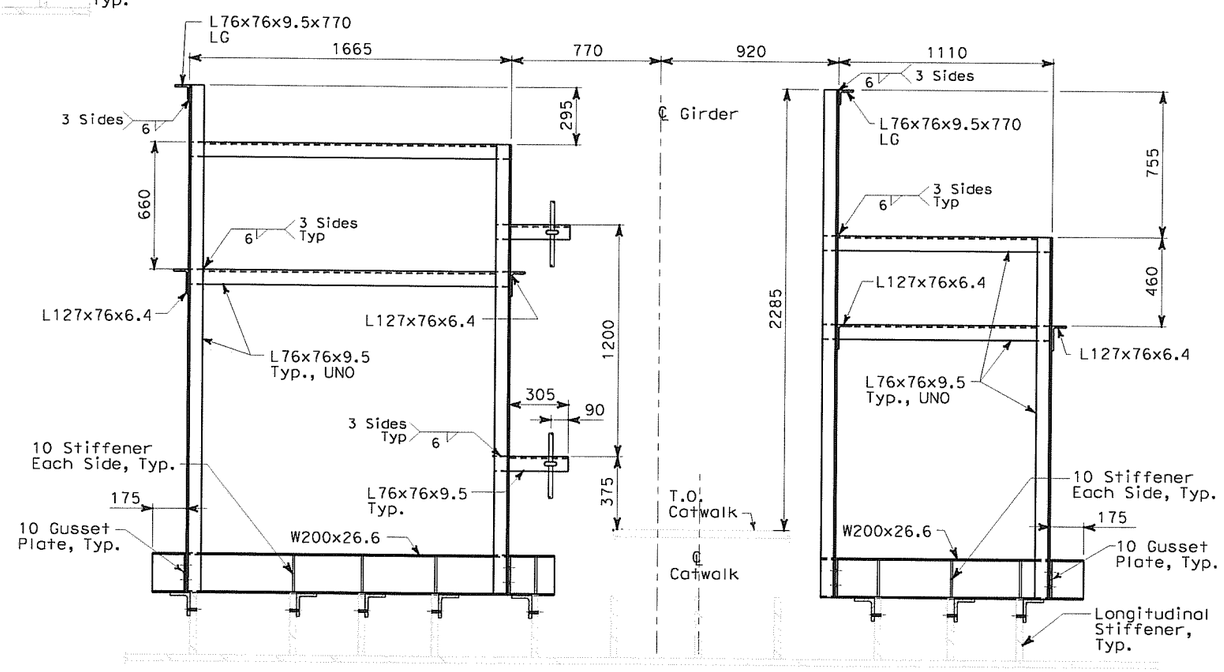

E AS-16A **SECTION** SCALE: 1:15

ALL DIMENSIONS ARE IN MILLIMETERS UNLESS OTHERWISE SHOWN

Bob Zandipour
DESIGN OVERSIGHT

SIGN OFF DATE

DESIGN DETAIL SHEET (METRIC) (REV. 3/1/98)

	BY	CHECKED
DESIGN	L. Johnson	M. S. Owyang
DETAILS	A. Antonio	L. Johnson
QUANTITIES	L. Johnson	P. McNamee

ORIGINAL SCALE IN MILLIMETERS FOR REDUCED PLANS 0 10 20 30 40 50 60 70 80 90 100

PREPARED FOR THE STATE OF CALIFORNIA DEPARTMENT OF TRANSPORTATION

Brady Nadell
PROJECT ENGINEER

CU 04251
EA 0120F1

BRIDGE NO. 34-0006
KILOMETER POST 13.2/13.9

DISREGARD PRINTS BEARING EARLIER REVISION DATES

REVISION DATES (PRELIMINARY STAGE ONLY)

SAS SUPERSTRUCTURE

WESTBOUND CABLE TRAY SUPPORT DETAILS AT PP 9 AND PP 10 - SHEET 2 OF 4

AS-16B

SHEET 16B OF 16

FILE => T:\13103\MS\pse\SAS Struc\CCO\SAS CCO42S1\CCO 42S1 Final Submittal 2008-07-11\04-0120f1_0086S02.dgn

USERNAME => llorico DATE PLOTTED => 7/21/2008 TIME PLOTTED => 21:57:42 PM

$FREQUEST

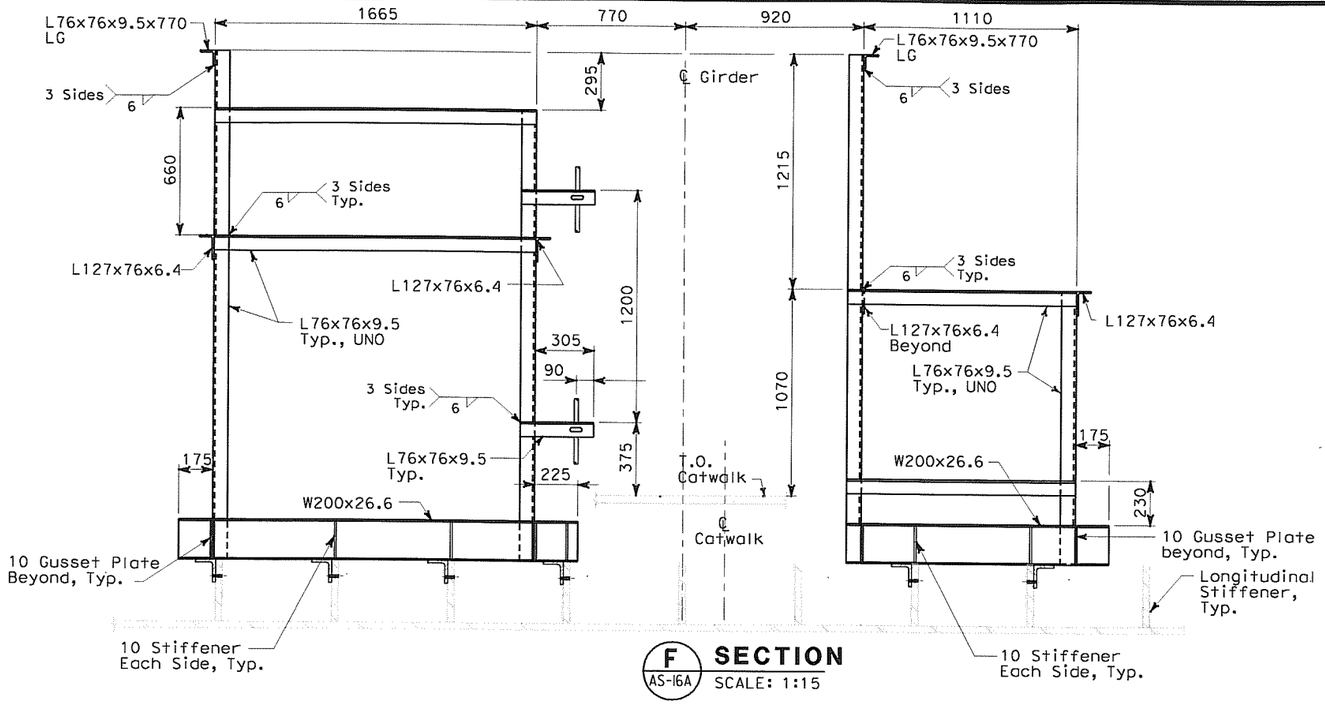

F AS-16A **SECTION**
SCALE: 1:15

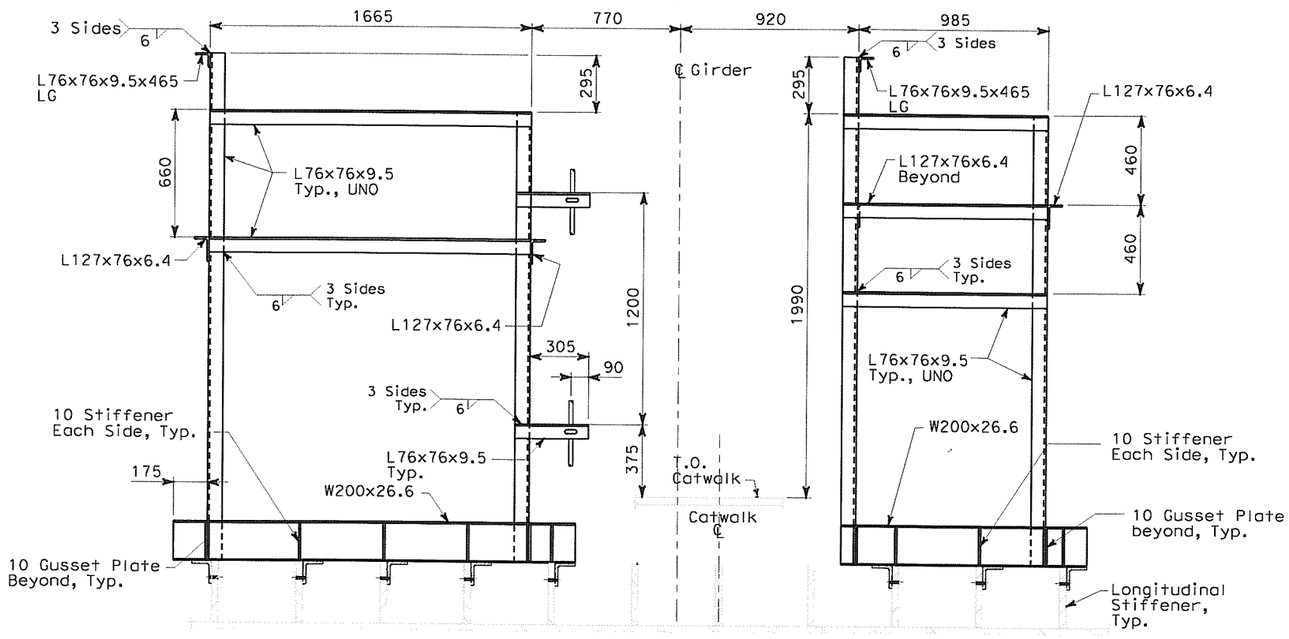

H AS-16A **SECTION**
SCALE: 1:15

ALL DIMENSIONS ARE IN MILLIMETERS UNLESS OTHERWISE SHOWN

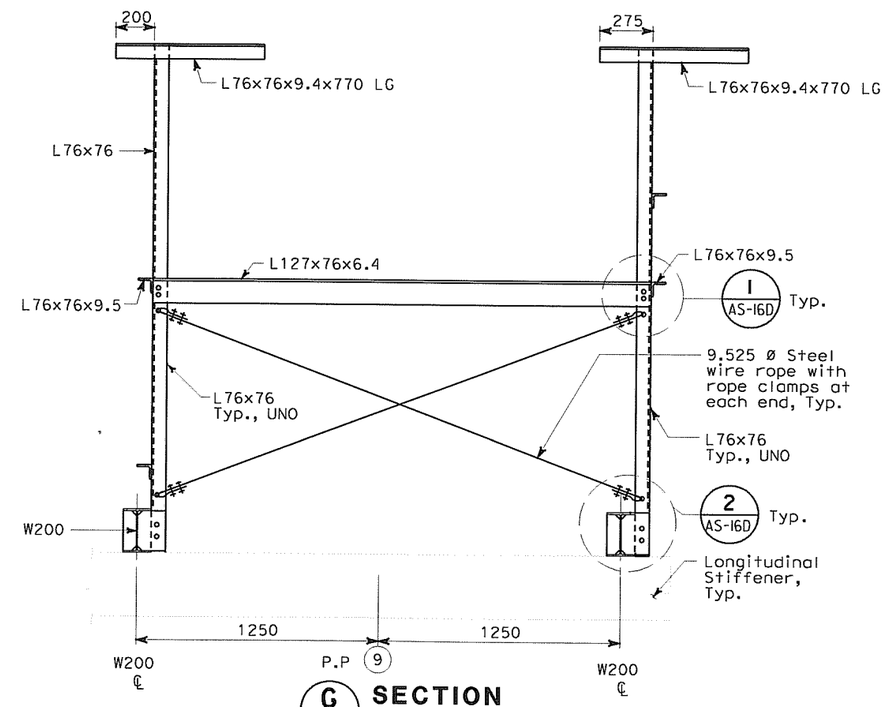

G AS-16A **SECTION**
SCALE: 1:15

DIST	COUNTY	ROUTE	KILOMETER POST TOTAL PROJECT	SHEET No	TOTAL SHEETS
04	SF	80	13.2/13.9	86S3	1204

REGISTERED CIVIL ENGINEER — DATE 2/22/08

PLANS APPROVAL DATE

The State of California or its officers or agents shall not be responsible for the accuracy or completeness of electronic copies of this plan sheet.

REGISTERED PROFESSIONAL ENGINEER — Lawrence M. Johns — No. C 44006 — Exp. 6/30/09 — CIVIL — STATE OF CALIFORNIA

Parsons Brinckerhoff Quade & Douglas, Inc.
303 Second Street, Suite 700N
San Francisco, CA 94107

Caltrans now has a web site! To get to the web site, go to: http://www.dot.ca.gov

REQUEST FOR INFORMATION NOT ADDRESSED IN THIS CCO REMAIN IN FORCE					
0	02/25/08	CABLE TRAY CHANGES	TW	LMJ	42S1
MARK	DATE	DESCRIPTIONS	BY	CH'D	CCO#
		REVISIONS			

CONTRACT CHANGE ORDER NO. _____
SHEET _____ OF _____

NOTES:

1. For structural notes, see sheet AS-1.
2. For cable tray support locations, see electrical plans and dwgs AS-16K and AS-16R.

Bob Zandipour
DESIGN OVERSIGHT

SIGN OFF DATE

DESIGN DETAIL SHEET (METRIC) (REV. 3/1/98)

	BY	CHECKED
DESIGN	L. Johnson	M. S. Owyang
DETAILS	A. Antonio	L. Johnson
QUANTITIES	L. Johnson	P. McNamee

PREPARED FOR THE STATE OF CALIFORNIA DEPARTMENT OF TRANSPORTATION

Brady Nadell
PROJECT ENGINEER

BRIDGE NO. 34-0006
KILOMETER POST 13.2/13.9

SAS SUPERSTRUCTURE

WESTBOUND CABLE TRAY SUPPORT DETAILS AT PP 9 AND PP 10 - SHEET 3 OF 4

AS-16C

SHEET 16C OF 16

CU 04251
EA 0120F1

ORIGINAL SCALE IN MILLIMETERS FOR REDUCED PLANS 0 10 20 30 40 50 60 70 80 90 100

DISREGARD PRINTS BEARING EARLIER REVISION DATES

REVISION DATES (PRELIMINARY STAGE ONLY)

FILE => T:\13103\MS\pse\SAS Struc\CCO\SAS CCO42S1\CCO 42S1 Final Submittal 2008-07-11\04-0120f1_0086S03.dgn

USERNAME => lliorico DATE PLOTTED => 7/21/2008 TIME PLOTTED => 2:58:44 PM

$FREQUEST

DIST	COUNTY	ROUTE	KILOMETER POST TOTAL PROJECT	SHEET No.	TOTAL SHEETS
04	SF	80	13.2/13.9	86S4	1204

REGISTERED CIVIL ENGINEER 2/22/08 DATE

PLANS APPROVAL DATE

REGISTERED PROFESSIONAL ENGINEER Lawrence M. Johnson No. C 44006 Exp. 6/30/09 CIVIL STATE OF CALIFORNIA

The State of California or its officers or agents shall not be responsible for the accuracy or completeness of electronic copies of this plan sheet.

Parsons Brinckerhoff Quade & Douglas, Inc.
303 Second Street, Suite 700N
San Francisco, CA 94107

Caltrans now has a web site! To get to the web site, go to: http://www.dot.ca.gov

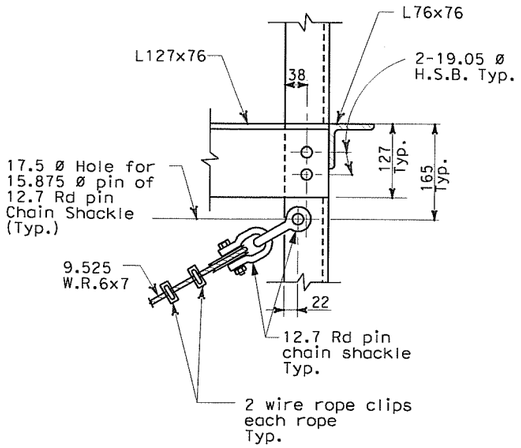

I / AS-16A DETAIL SCALE: 1:5
AS-16B
AS-16C

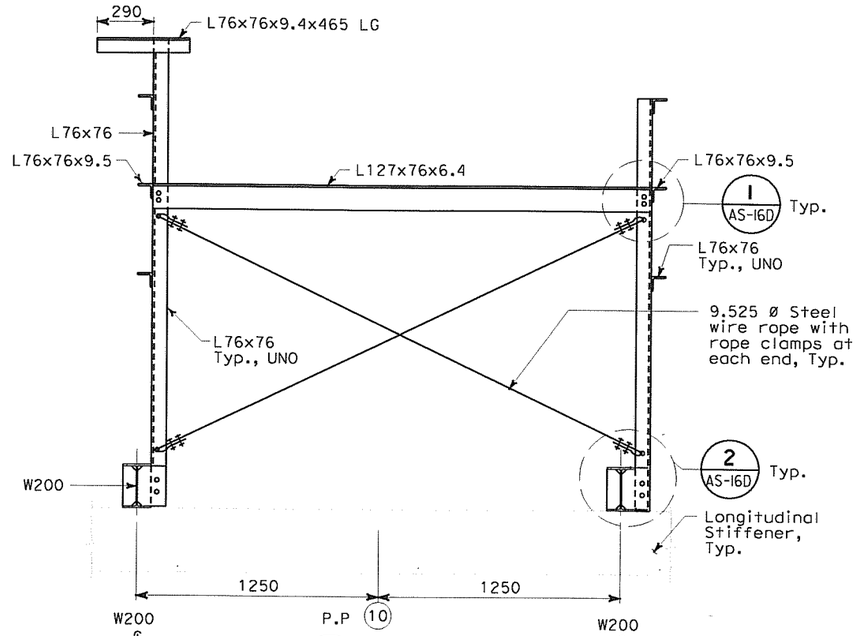

J / AS-16A SECTION SCALE: 1:15

NOTES:

1. For structural notes, see sheet AS-1.
2. For cable tray support locations, see electrical plans and dwgs. AS-16K and AS-16R.

REQUEST FOR INFORMATION NOT ADDRESSED IN THIS CCO REMAIN IN FORCE

MARK	DATE	DESCRIPTIONS	BY	CH'D	CCO#
0	02/25/08	CABLE TRAY CHANGES	TW	LMJ	42S1

REVISIONS

CONTRACT CHANGE ORDER NO. _____
SHEET ____ OF ____

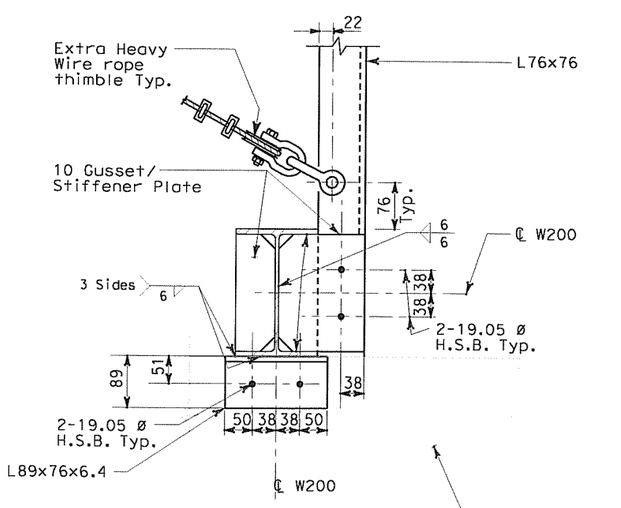

2 / AS-16A DETAIL SCALE: 1:5
AS-16B
AS-16C

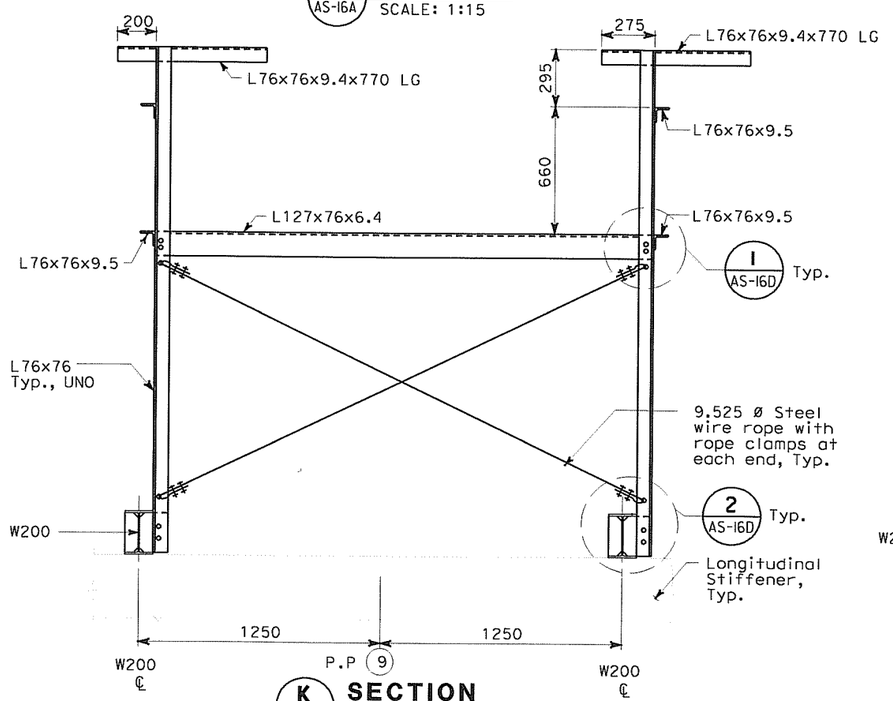

K / AS-16A SECTION SCALE: 1:15

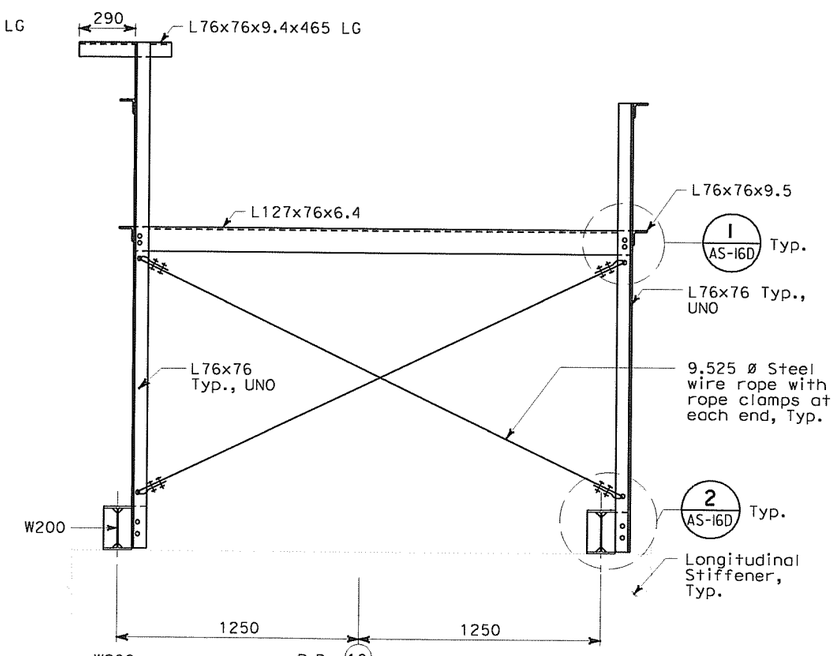

L / AS-16A SECTION SCALE: 1:15

ALL DIMENSIONS ARE IN MILLIMETERS UNLESS OTHERWISE SHOWN

Bob Zandipour
DESIGN OVERSIGHT

SIGN OFF DATE

DESIGN DETAIL SHEET (METRIC) (REV. 3/1/98)

	BY	CHECKED
DESIGN	L. Johnson	M. S. Owyang
DETAILS	A. Antonio	L. Johnson
QUANTITIES	L. Johnson	P. McNamee

PREPARED FOR THE STATE OF CALIFORNIA DEPARTMENT OF TRANSPORTATION

Brady Nadell
PROJECT ENGINEER

BRIDGE NO. 34-0006
KILOMETER POST 13.2/13.9

SAS SUPERSTRUCTURE

WESTBOUND CABLE TRAY SUPPORT DETAILS AT PP 9 AND PP 10 - SHEET 4 OF 4

AS-16D

SHEET 16D OF 16

ORIGINAL SCALE IN MILLIMETERS FOR REDUCED PLANS 0 10 20 30 40 50 60 70 80 90 100

CU 04251
EA 0120F1

DISREGARD PRINTS BEARING EARLIER REVISION DATES

REVISION DATES (PRELIMINARY STAGE ONLY)

FILE => T:\13103\MS\pse\SAS Struc\CCO\SAS CCO42S1\CCO 42S1 Final Submittal 2008-07-11\04-0120f1_0086S04.dgn

USERNAME => llorico DATE PLOTTED => 7/11/2008 TIME PLOTTED => 11:50:43 PM

$FREQUEST

DIST	COUNTY	ROUTE	KILOMETER POST TOTAL PROJECT	SHEET No	TOTAL SHEETS
04	SF	80	13.2/13.9	86S5	1204

REGISTERED CIVIL ENGINEER 2/22/08 DATE

PLANS APPROVAL DATE

REGISTERED PROFESSIONAL ENGINEER Lawrence M. Johnson No. C 44006 Exp. 6/30/09 CIVIL STATE OF CALIFORNIA

The State of California or its officers or agents shall not be responsible for the accuracy or completeness of electronic copies of this plan sheet.

Parsons Brinckerhoff Quade & Douglas, Inc.
303 Second Street, Suite 700N
San Francisco, CA 94107

Caltrans now has a web site! To get to the web site, go to: http://www.dot.ca.gov

Caltrans Metric

REQUEST FOR INFORMATION NOT ADDRESSED IN THIS CCO REMAIN IN FORCE

MARK	DATE	DESCRIPTIONS	BY	CH'D	CCO#
0	02/25/08	CABLE TRAY CHANGES	TW	LMJ	42S1

REVISIONS

CONTRACT CHANGE ORDER NO. _____
SHEET _____ OF _____

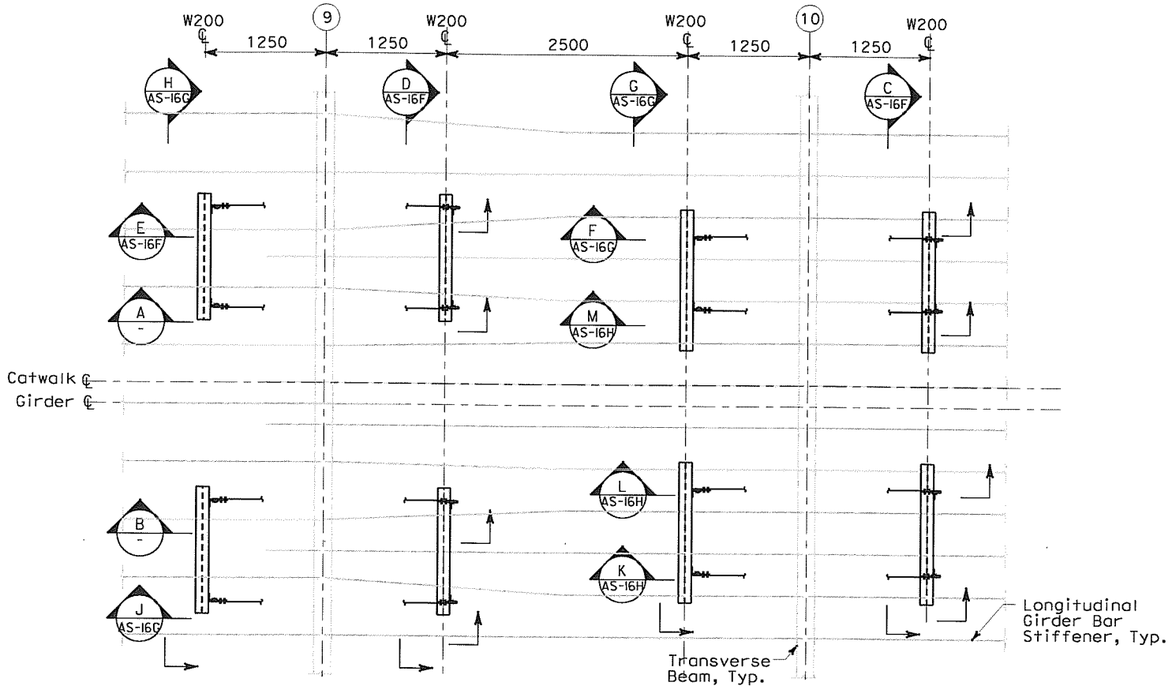

EASTBOUND CABLE SUPPORT PLAN - PANEL POINTS 9 AND 10

SCALE: 1:30

NOTES:

1. For structural notes, see sheet AS-1.
2. For cable tray support locations, see electrical plans and dwgs AS-16K and AS-16R.

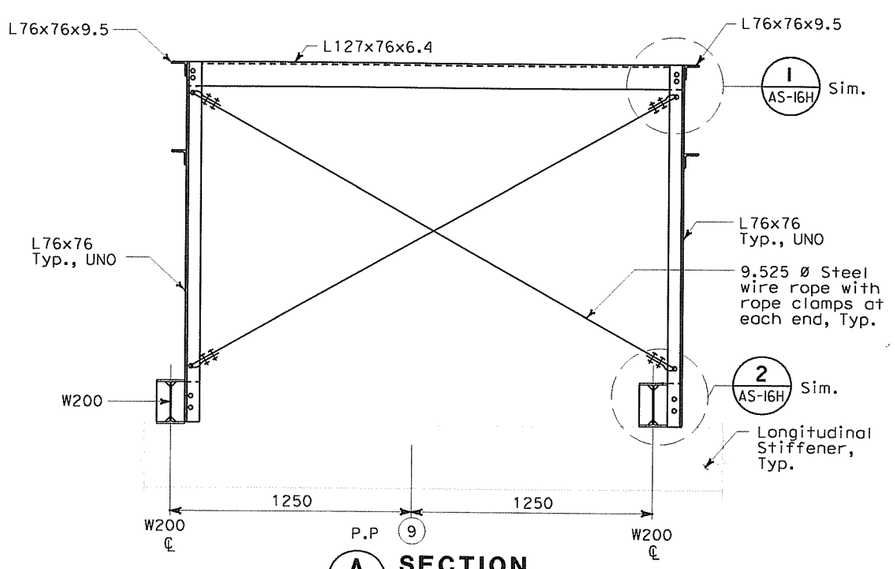

A - SECTION
SCALE: 1:15

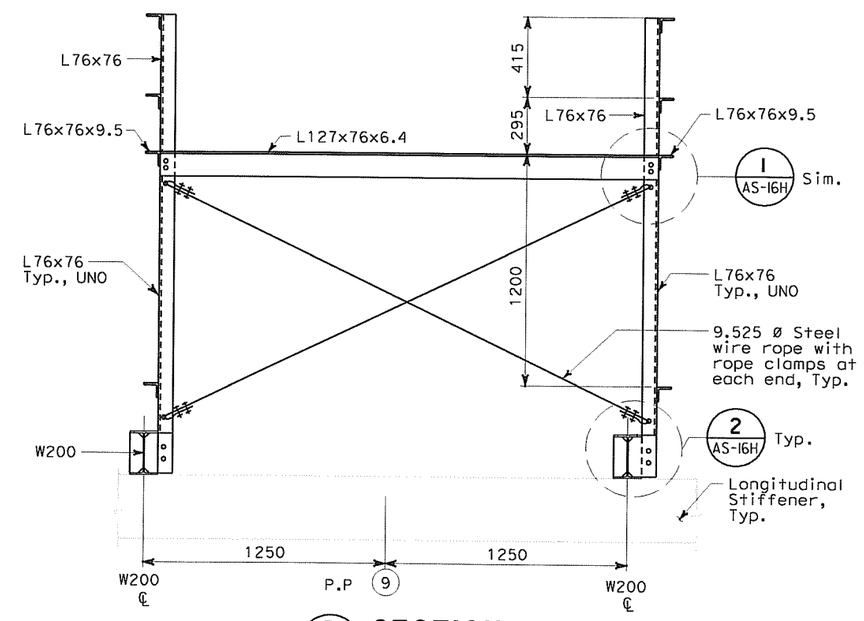

B - SECTION
SCALE: 1:15

ALL DIMENSIONS ARE IN MILLIMETERS UNLESS OTHERWISE SHOWN

Bob Zandipour
DESIGN OVERSIGHT

SIGN OFF DATE

DESIGN DETAIL SHEET (METRIC) (REV. 3/1/98)

	BY	CHECKED
DESIGN	L. Johnson	M. S. Owyang
DETAILS	A. Antonio	L. Johnson
QUANTITIES	L. Johnson	P. McNamee

ORIGINAL SCALE IN MILLIMETERS FOR REDUCED PLANS 0 10 20 30 40 50 60 70 80 90 100

PREPARED FOR THE STATE OF CALIFORNIA DEPARTMENT OF TRANSPORTATION

Brady Nadell
PROJECT ENGINEER

CU 04251
EA 0120F1

BRIDGE NO. 34-0006
KILOMETER POST 13.2/13.9

SAS SUPERSTRUCTURE

EASTBOUND CABLE TRAY SUPPORT DETAILS AT PP 9 AND PP 10 - SHEET 1 OF 4

AS-16E

DISREGARD PRINTS BEARING EARLIER REVISION DATES

REVISION DATES (PRELIMINARY STAGE ONLY)

SHEET 16E OF 16

FILE => T:\13103\MS\pse\SAS Struc\CCO\SAS CCO42S1\CCO 42S1 Final Submittal 2008-07-11\04-0120f1_0086S05.dgn

USERNAME => llorico DATE PLOTTED => 7/21/2008 TIME PLOTTED => 2:59:19 PM

REQUEST

DIST	COUNTY	ROUTE	KILOMETER POST TOTAL PROJECT	SHEET No	TOTAL SHEETS
04	SF	80	13.2/13.9	86S6	1204

REGISTERED CIVIL ENGINEER 2/22/08 DATE

PLANS APPROVAL DATE

REGISTERED PROFESSIONAL ENGINEER Lawrence M. Johnson No. C 44006 Exp. 6/30/09 CIVIL STATE OF CALIFORNIA

The State of California or its officers or agents shall not be responsible for the accuracy or completeness of electronic copies of this plan sheet.

Parsons Brinckerhoff Quade & Douglas, Inc.
303 Second Street, Suite 700N
San Francisco, CA 94107

Caltrans now has a web site! To get to the web site, go to: http://www.dot.ca.gov

REQUEST FOR INFORMATION NOT ADDRESSED IN THIS CCO REMAIN IN FORCE

MARK	DATE	DESCRIPTIONS	BY	CH'D	CCO#
0	02/25/08	CABLE TRAY CHANGES	TW	LMJ	42S1

REVISIONS

CONTRACT CHANGE ORDER NO. _____
SHEET _____ OF _____

NOTES:

1. For structural notes, see sheet AS-1.
2. For cable tray support locations, see electrical plans and dwgs AS-16K and AS-16R.

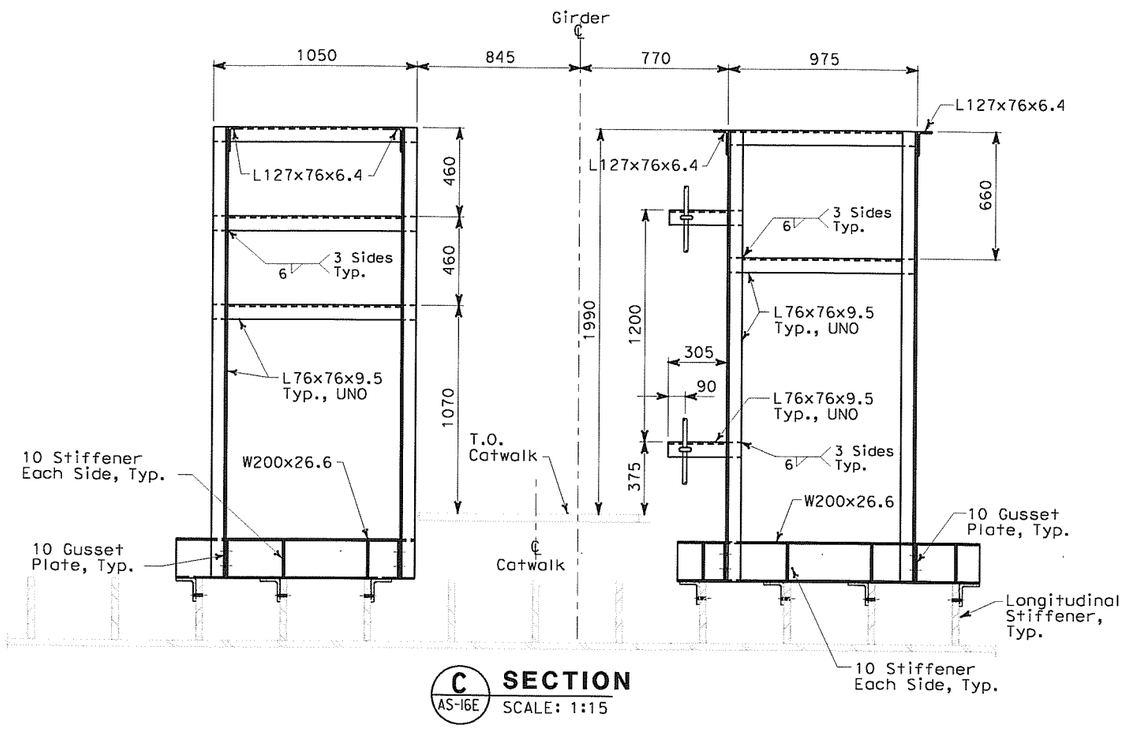

C AS-16E **SECTION**
SCALE: 1:15

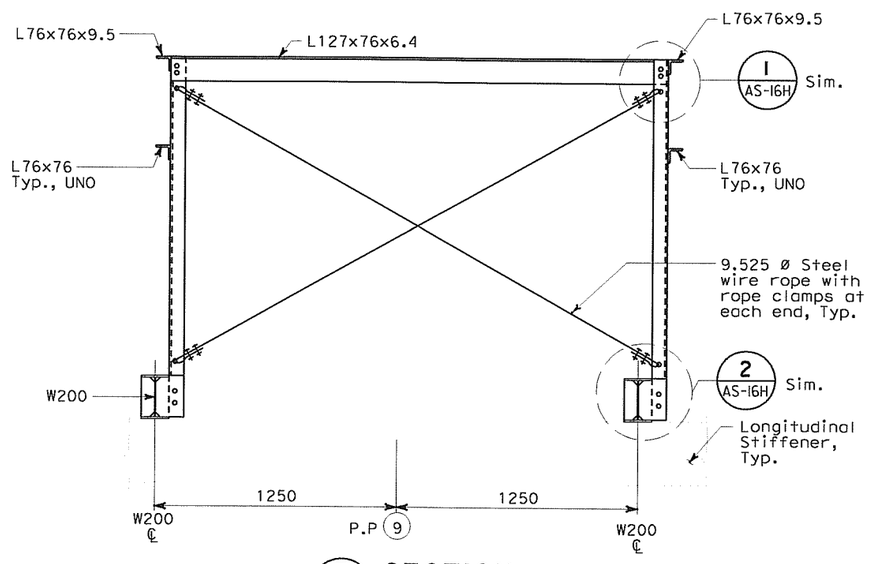

E AS-16E **SECTION**
SCALE: 1:15

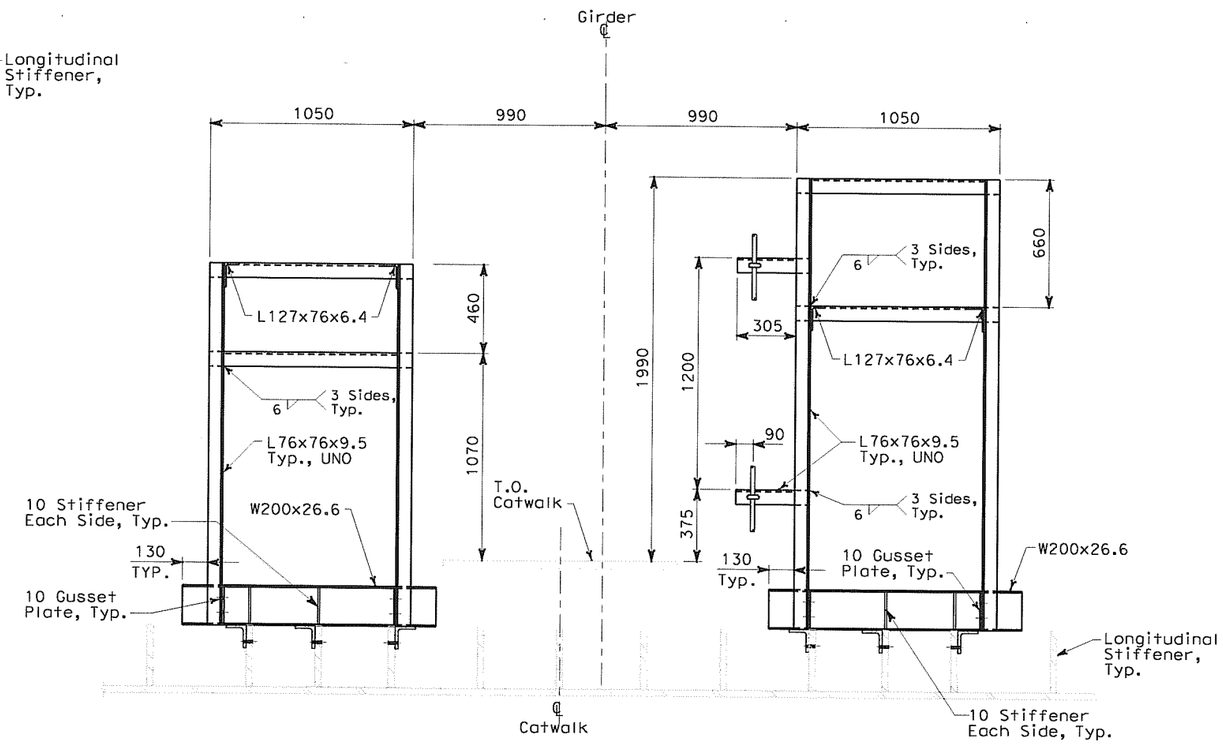

D AS-16E **SECTION**
SCALE: 1:15

ALL DIMENSIONS ARE IN MILLIMETERS UNLESS OTHERWISE SHOWN

Bob Zandipour
DESIGN OVERSIGHT

SIGN OFF DATE

DESIGN DETAIL SHEET (METRIC) (REV. 3/1/98)

	BY	CHECKED
DESIGN	L. Johnson	M. S. Owyang
DETAILS	A. Antonio	L. Johnson
QUANTITIES	L. Johnson	P. McNamee

PREPARED FOR THE STATE OF CALIFORNIA DEPARTMENT OF TRANSPORTATION

Brady Nadell
PROJECT ENGINEER

BRIDGE NO. 34-0006
KILOMETER POST 13.2/13.9

SAS SUPERSTRUCTURE

EASTBOUND - CABLE TRAY SUPPORT DETAILS AT PP 9 AND PP 10 - SHEET 2 OF 4

AS-16F

ORIGINAL SCALE IN MILLIMETERS FOR REDUCED PLANS 0 10 20 30 40 50 60 70 80 90 100

CU 04251
EA 0120F1

DISREGARD PRINTS BEARING EARLIER REVISION DATES

REVISION DATES (PRELIMINARY STAGE ONLY)

SHEET 16F OF 16

FILE => T:\13103\MS\pse\SAS Struc\CCO\SAS CCO42S1\CCO 42S1 Final Submittal 2008-07-11\04-0120f1_0086S06.dgn

USERNAME => llorico DATE PLOTTED => 7/21/2008 TIME PLOTTED => 2:59:43 PM

$FREQUEST

DIST	COUNTY	ROUTE	KILOMETER POST TOTAL PROJECT	SHEET No	TOTAL SHEETS
04	SF	80	13.2/13.9	86S7	1204

REGISTERED CIVIL ENGINEER 2/22/08 DATE

PLANS APPROVAL DATE

REGISTERED PROFESSIONAL ENGINEER Lawrence M. Johnson No. C 44006 Exp. 6/30/09 CIVIL STATE OF CALIFORNIA

The State of California or its officers or agents shall not be responsible for the accuracy or completeness of electronic copies of this plan sheet.

Parsons Brinckerhoff Quade & Douglas, Inc.
303 Second Street, Suite 700N
San Francisco, CA 94107

Caltrans now has a web site! To get to the web site, go to: http://www.dot.ca.gov

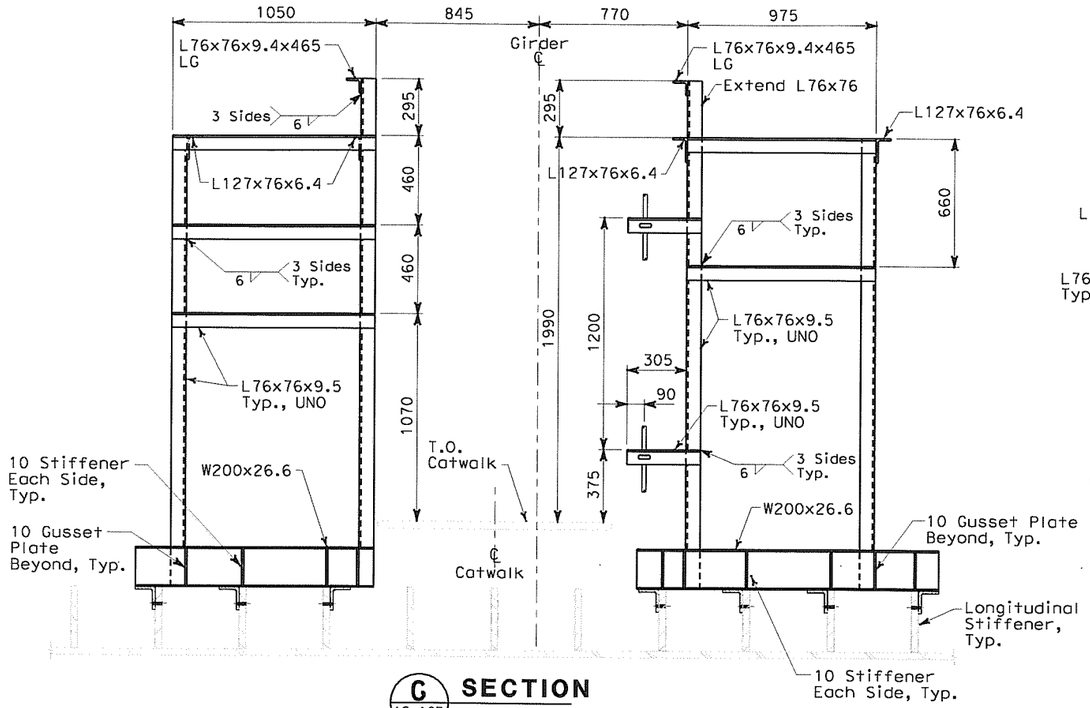

C SECTION AS-16E
SCALE: 1:15

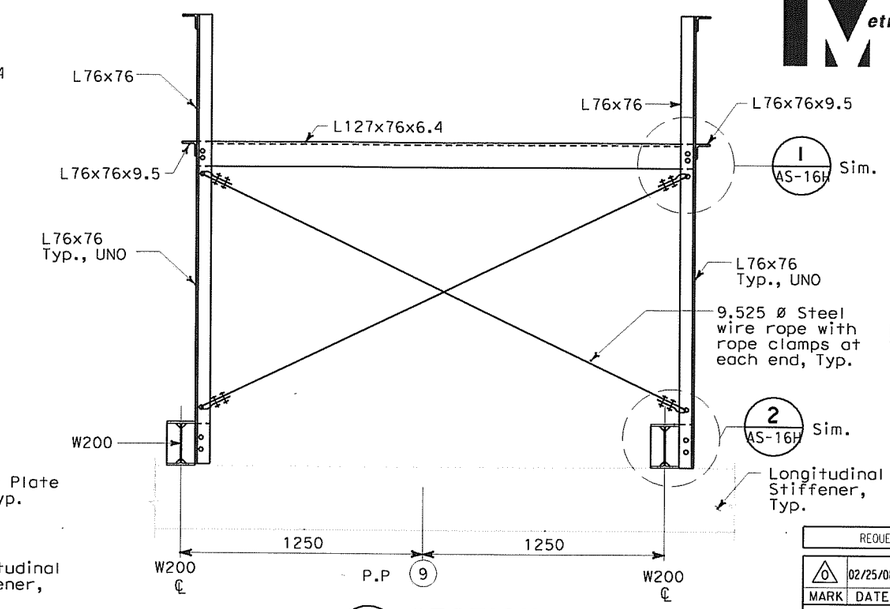

J SECTION AS-16E
SCALE: 1:15

NOTES:

1. For structural notes, see sheet AS-1.
2. For cable tray support locations, see electrical plans and dwgs. AS-16K and AS-16R.

REQUEST FOR INFORMATION NOT ADDRESSED IN THIS CCO REMAIN IN FORCE

MARK	DATE	DESCRIPTIONS	BY	CH'D	CCO#
0	02/25/08	CABLE TRAY CHANGES	TW	LMJ	42S1

REVISIONS

CONTRACT CHANGE ORDER NO. _____
SHEET ____ OF ____

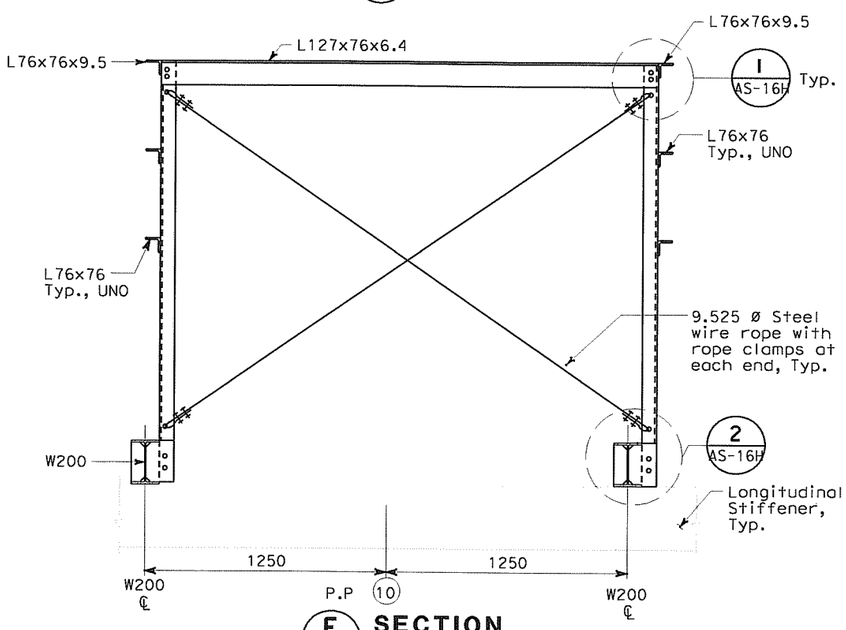

F SECTION AS-16E
SCALE: 1:15

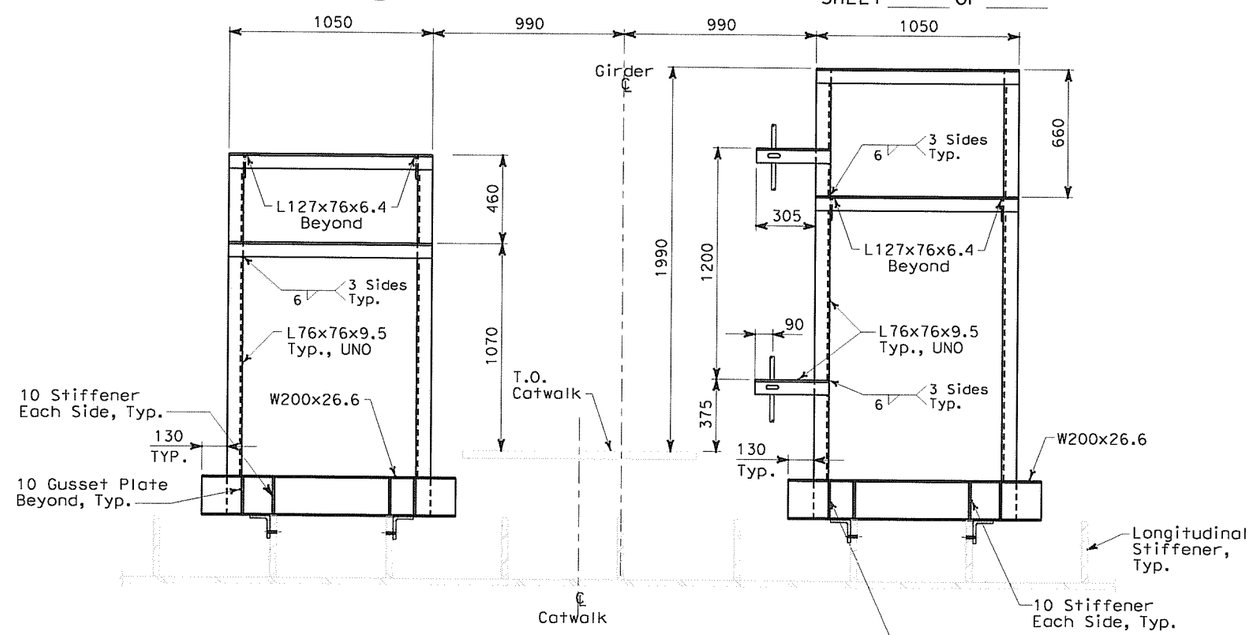

H SECTION AS-16E
SCALE: 1:15

ALL DIMENSIONS ARE IN MILLIMETERS UNLESS OTHERWISE SHOWN

Bob Zandipour
DESIGN OVERSIGHT

SIGN OFF DATE

DESIGN DETAIL SHEET (METRIC) (REV. 3/1/98)

	BY	CHECKED
DESIGN	L. Johnson	M. S. Owyang
DETAILS	A. Antonio	L. Johnson
QUANTITIES	L. Johnson	P. McNamee

PREPARED FOR THE STATE OF CALIFORNIA DEPARTMENT OF TRANSPORTATION

Brady Nadell
PROJECT ENGINEER

BRIDGE NO. 34-0006
KILOMETER POST 13.2/13.9

SAS SUPERSTRUCTURE

EASTBOUND CABLE TRAY SUPPORT DETAILS AT PP 9 AND PP 10 - SHEET 3 OF 4

AS-16G

ORIGINAL SCALE IN MILLIMETERS FOR REDUCED PLANS 0 10 20 30 40 50 60 70 80 90 100

CU 04251
EA 0120F1

DISREGARD PRINTS BEARING EARLIER REVISION DATES

REVISION DATES (PRELIMINARY STAGE ONLY)

SHEET 16G OF 16

FILE => T:\13103\MS\pse\SAS Struc\CCO\SAS CCO42S1\CCO 42S1 Final Submittal 2008-07-11\04-0120F1_0086S07.dgn

USERNAME => tlorrico DATE PLOTTED => 7/21/2008 TIME PLOTTED => 3:00:11 PM

$FREQUEST

DIST	COUNTY	ROUTE	KILOMETER POST TOTAL PROJECT	SHEET No	TOTAL SHEETS
04	SF	80	13.2/13.9	86S8	1204

REGISTERED CIVIL ENGINEER 2/22/08 DATE

PLANS APPROVAL DATE

REGISTERED PROFESSIONAL ENGINEER Lawrence W. Johnson No. C 44006 Exp. 6/30/09 CIVIL STATE OF CALIFORNIA

The State of California or its officers or agents shall not be responsible for the accuracy or completeness of electronic copies of this plan sheet.

Parsons Brinckerhoff Quade & Douglas, Inc.
303 Second Street, Suite 700N
San Francisco, CA 94107

Caltrans now has a web site! To get to the web site, go to: http://www.dot.ca.gov

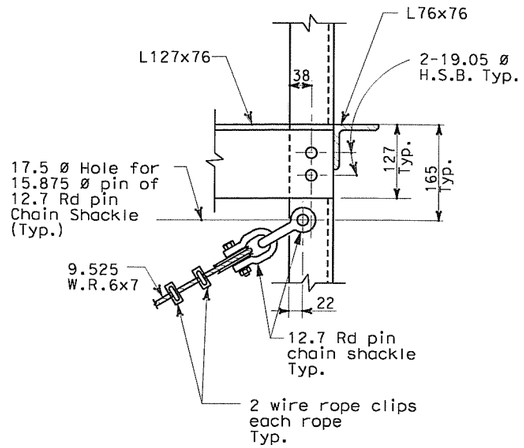

1 AS-16E DETAIL SCALE: 1:5

AS-16F
AS-16G

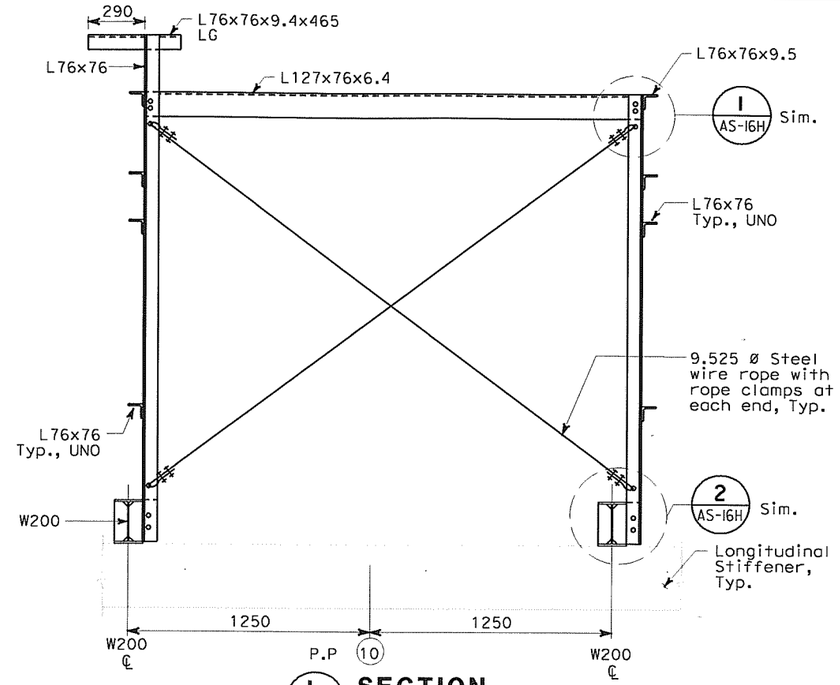

L AS-16E SECTION SCALE: 1:15

NOTES:

1. For structural notes, see sheet AS-1.
2. For cable tray support locations, see electrical plans and dwgs. AS-16K and AS-16R.

REQUEST FOR INFORMATION NOT ADDRESSED IN THIS CCO REMAIN IN FORCE

MARK	DATE	DESCRIPTIONS	BY	CH'D	CCO#
0	02/25/08	CABLE TRAY CHANGES	TW	LMJ	42S1

REVISIONS

CONTRACT CHANGE ORDER NO. _____
SHEET ____ OF ____

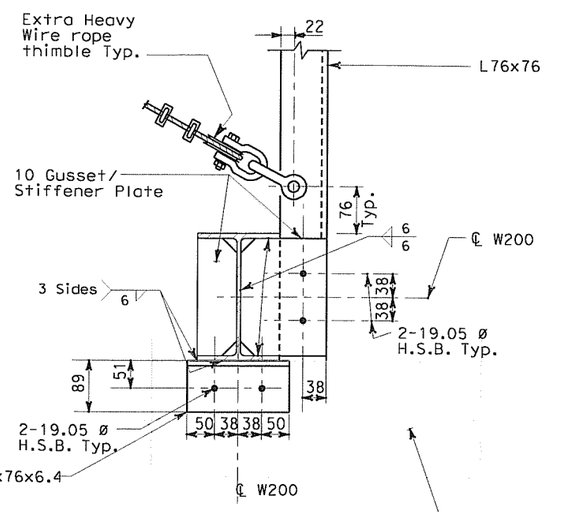

2 AS-16E DETAIL SCALE: 1:5

AS-16F
AS-15G

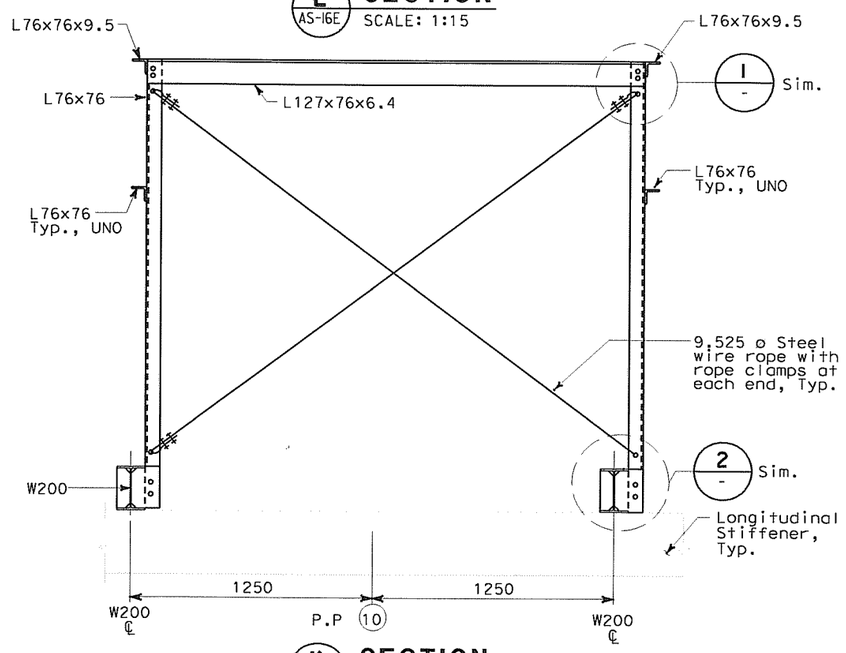

K AS-16E SECTION SCALE: 1:15

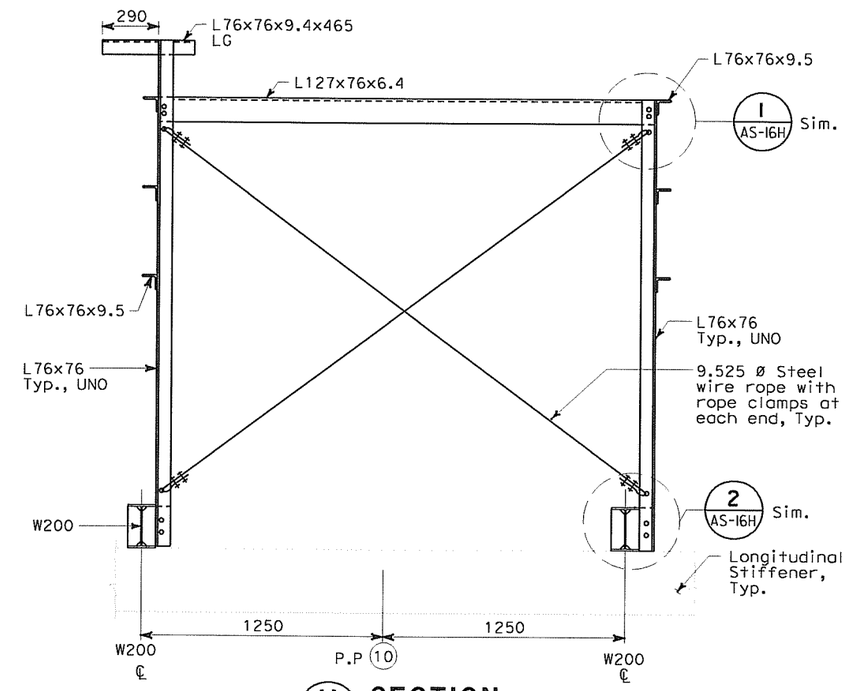

M AS-16E SECTION SCALE: 1:15

ALL DIMENSIONS ARE IN MILLIMETERS UNLESS OTHERWISE SHOWN

Bob Zandipour
DESIGN OVERSIGHT

SIGN OFF DATE

DESIGN DETAIL SHEET (METRIC) (REV. 3/1/98)

	BY	CHECKED
DESIGN	L. Johnson	M. S. Owyang
DETAILS	A. Antonio	L. Johnson
QUANTITIES	L. Johnson	P. McNamee

PREPARED FOR THE STATE OF CALIFORNIA DEPARTMENT OF TRANSPORTATION

Brady Nadell
PROJECT ENGINEER

ORIGINAL SCALE IN MILLIMETERS FOR REDUCED PLANS 0 10 20 30 40 50 60 70 80 90 100

CU 04251
EA 0120F1

BRIDGE NO. 34-0006
KILOMETER POST 13.2/13.9

DISREGARD PRINTS BEARING EARLIER REVISION DATES

REVISION DATES (PRELIMINARY STAGE ONLY)

SAS SUPERSTRUCTURE

EASTBOUND CABLE TRAY SUPPORT DETAILS AT PP 9 AND PP 10 - SHEET 4 OF 4

AS-16H

SHEET 16H OF 16

FILE => T:\13103\MS\pse\SAS Struc\CCO\SAS CCO4251\CCO 4251 Final Submittal 2008-07-11\04-0120F1_0086S08.dgn

USERNAME => ylorico DATE PLOTTED => 7/11/2008 TIME PLOTTED => 14:53:27 PM

$REQUEST

DIST	COUNTY	ROUTE	KILOMETER POST TOTAL PROJECT	SHEET No	TOTAL SHEETS
04	SF	80	13.2/13.9	86S9	1204

REGISTERED CIVIL ENGINEER 2/22/08 DATE

PLANS APPROVAL DATE

REGISTERED PROFESSIONAL ENGINEER Mee Shing Owyong No. 24960 Exp. 12/31/09 CIVIL STATE OF CALIFORNIA

The State of California or its officers or agents shall not be responsible for the accuracy or completeness of electronic copies of this plan sheet.

Parsons Brinckerhoff Quade & Douglas, Inc.
303 Second Street, Suite 700N
San Francisco, CA 94107

Caltrans now has a web site! To get to the web site, go to: http://www.dot.ca.gov

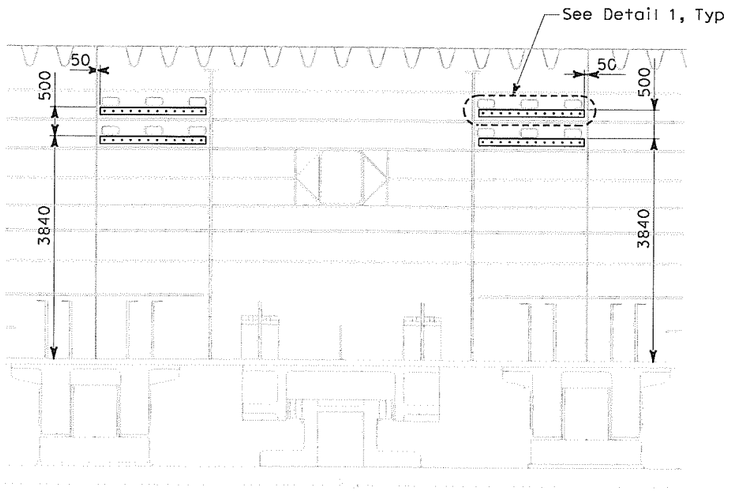

TYPE XI
Side E2 Web Plates
SCALE: 1:50

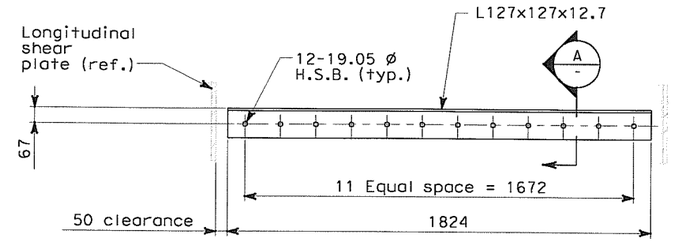

DETAIL 1
NO SCALE

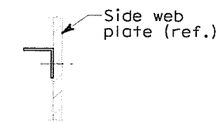

A SECTION
NO SCALE

NOTES:

1 For cable tray installation and layout, see sheets E-131 and E-220.

REQUEST FOR INFORMATION NOT ADDRESSED IN THIS CCO REMAIN IN FORCE

MARK	DATE	DESCRIPTIONS	BY	CH'D	CCO#
0	02/25/08	CABLE TRAY CHANGES	TW	MSO	42S1

REVISIONS

CONTRACT CHANGE ORDER NO. _____
SHEET _____ OF _____

ALL DIMENSIONS ARE IN MILLIMETERS UNLESS OTHERWISE SHOWN

Bob Zandipour
DESIGN OVERSIGHT

SIGN OFF DATE

DESIGN DETAIL SHEET (METRIC) (REV. 3/1/98)

	BY	CHECKED
DESIGN	E. Sugiyama	M. S. Owyong
DETAILS	E. Sugiyama	M. S. Owyong
QUANTITIES	E. Sugiyama	M. S. Owyong

ORIGINAL SCALE IN MILLIMETERS FOR REDUCED PLANS 0 10 20 30 40 50 60 70 80 90 100

PREPARED FOR THE STATE OF CALIFORNIA DEPARTMENT OF TRANSPORTATION

Brady Nadell
PROJECT ENGINEER

BRIDGE NO. 34-0006
KILOMETER POST 13.2/13.9

CU 04251
EA 0120F1

DISREGARD PRINTS BEARING EARLIER REVISION DATES

REVISION DATES (PRELIMINARY STAGE ONLY)

SAS SUPERSTRUCTURE
CABLE TRAY SUPPORT DETAIL

AS-16J

SHEET 16J OF 16

FILE => T:\13103\MS\pse\SAS Struc\CCO\SAS CCO42S1\CCO 42S1 Final Submittal 2008-07-11\04-0120f1_0086509.dgn

USERNAME => gorcior DATE PLOTTED => 8/28/2008 TIME PLOTTED => 3:30:51 PM

9FREQUEST

DIST	COUNTY	ROUTE	KILOMETER POST TOTAL PROJECT	SHEET No	TOTAL SHEETS
04	SF	80	13.2/13.9	86 S10	1204

REGISTERED CIVIL ENGINEER — DATE 2/22/08

PLANS APPROVAL DATE

REGISTERED PROFESSIONAL ENGINEER — Mee Shing Owyang — No. 24960 — Exp. 12/31/08 — CIVIL — STATE OF CALIFORNIA

The State of California or its officers or agents shall not be responsible for the accuracy or completeness of electronic copies of this plan sheet.

Parsons Brinckerhoff Quade & Douglas, Inc.
303 Second Street, Suite 700N
San Francisco, CA 94107

Caltrans now has a web site! To get to the web site, go to: http://www.dot.ca.gov

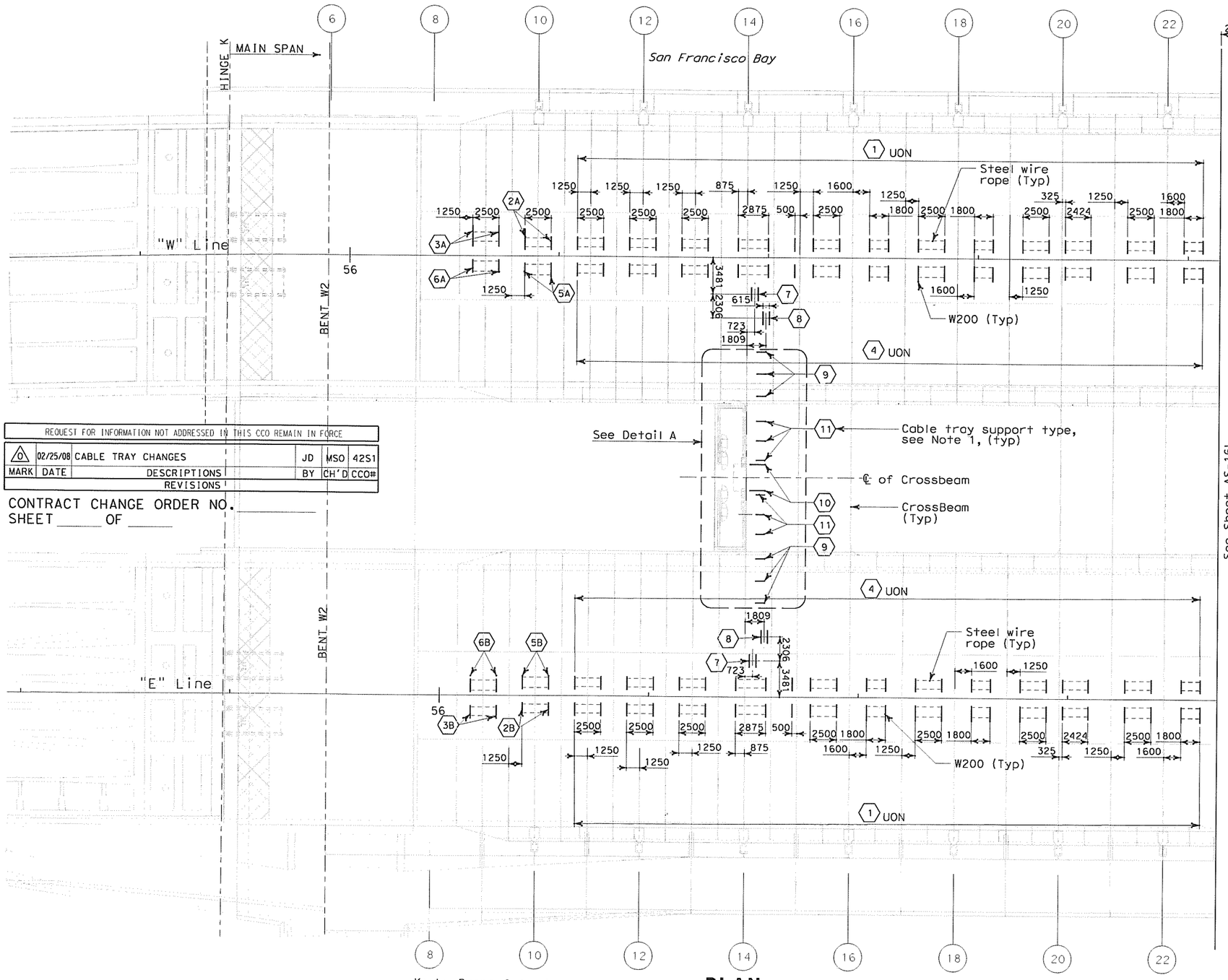

PLAN
SCALE: 1:200

ALL DIMENSIONS ARE IN MILLIMETERS UNLESS OTHERWISE SHOWN

NOTE:

1. For cable tray support type, see Table A sheet AS-16R.

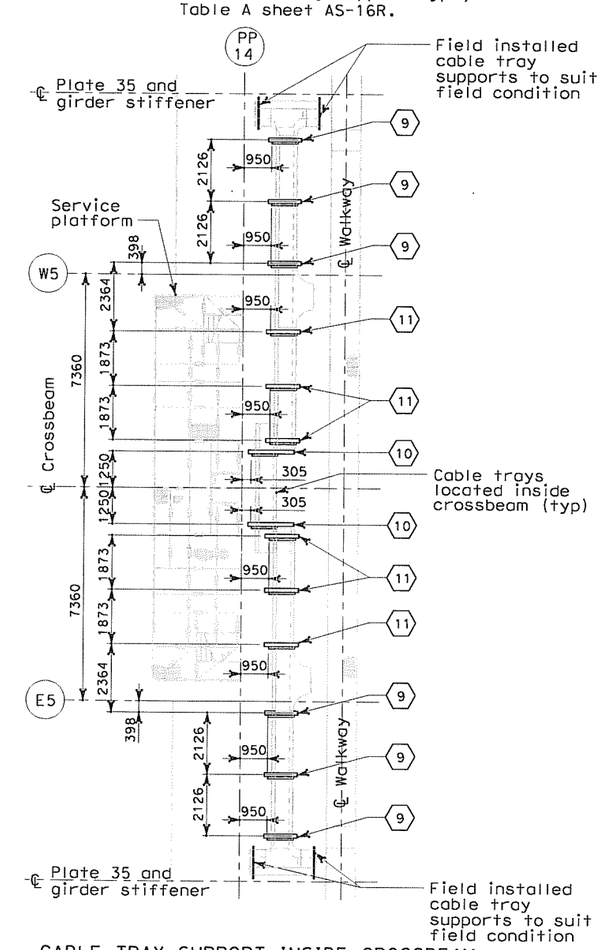

CABLE TRAY SUPPORT INSIDE CROSSBEAM

A DETAIL
SCALE: 1:100

REQUEST FOR INFORMATION NOT ADDRESSED IN THIS CCO REMAIN IN FORCE					
0	02/25/08	CABLE TRAY CHANGES	JD	MSO	42S1
MARK	DATE	DESCRIPTIONS	BY	CH'D	CCO#
		REVISIONS			

CONTRACT CHANGE ORDER NO. _____
SHEET _____ OF _____

Bob Zandipour
DESIGN OVERSIGHT

SIGN OFF DATE

	BY	CHECKED
DESIGN	J. Dones	M. S. Owyang
DETAILS	L. Reyes	J. Dones
QUANTITIES	J. Dones	P. Mcnamee

PREPARED FOR THE STATE OF CALIFORNIA DEPARTMENT OF TRANSPORTATION

Brady Nadell
PROJECT ENGINEER

BRIDGE NO. 34-0006
KILOMETER POST 13.2/13.9

SAS SUPERSTRUCTURE

OVERALL CABLE TRAY SUPPORT LOCATION PLAN HINGE K TO PP 22 - SHEET 1 OF 6

AS-16K

SHEET 16K OF 16

DESIGN DETAIL SHEET (METRIC) (REV. 3/1/98)

ORIGINAL SCALE IN MILLIMETERS FOR REDUCED PLANS 0 10 20 30 40 50 60 70 80 90 100

CU 04251
EA 0120F1

DISREGARD PRINTS BEARING EARLIER REVISION DATES

REVISION DATES (PRELIMINARY STAGE ONLY)

FILE => T:\13103\MS\pse\SAS Struc\CCO\SAS CCO4251\CCO 42S1 Final Submittal 2008-07-11\04-0120f1_0086S10.dgn

USERNAME => tiorico DATE PLOTTED => 7/11/2008 TIME PLOTTED => 1:55:34 PM

$FREQUEST

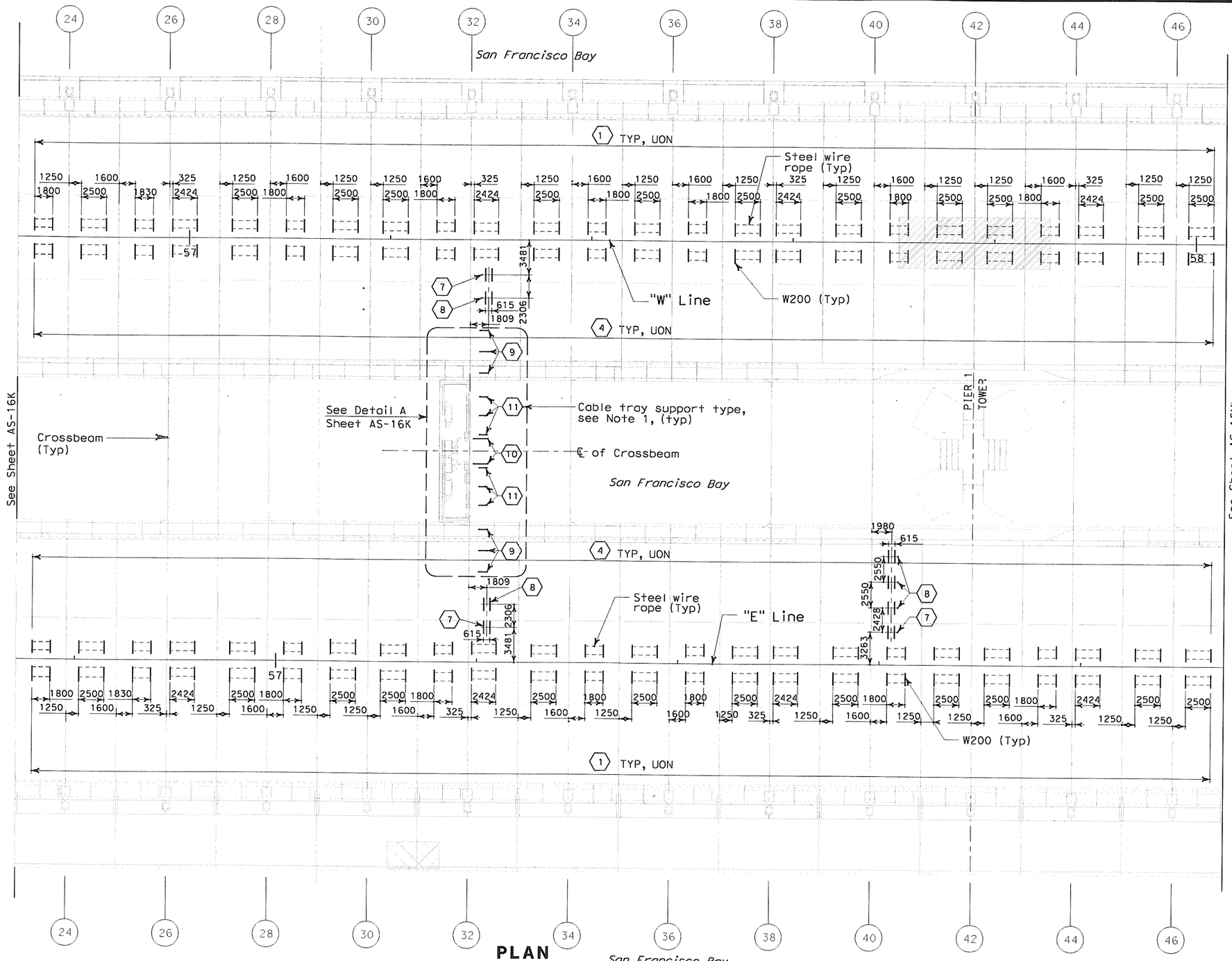

PLAN
SCALE: 1:200

ALL DIMENSIONS ARE IN MILLIMETERS UNLESS OTHERWISE SHOWN

DIST	COUNTY	ROUTE	KILOMETER POST TOTAL PROJECT	SHEET No	TOTAL SHEETS
04	SF	80	13.2/13.9	86 S11	1204

REGISTERED CIVIL ENGINEER 2/22/08 DATE

PLANS APPROVAL DATE

REGISTERED PROFESSIONAL ENGINEER Mee Shing Owyang No. 24960 Exp. 12/31/08 CIVIL STATE OF CALIFORNIA

The State of California or its officers or agents shall not be responsible for the accuracy or completeness of electronic copies of this plan sheet.

Parsons Brinckerhoff Quade & Douglas, Inc.
303 Second Street, Suite 700N
San Francisco, CA 94107

Caltrans now has a web site! To get to the web site, go to: http://www.dot.ca.gov

NOTE:

1. For cable tray support type, see Table A sheet AS-16R.

REQUEST FOR INFORMATION NOT ADDRESSED IN THIS CCO REMAIN IN FORCE

MARK	DATE	DESCRIPTIONS	BY	CH'D	CCO#
0	02/25/08	CABLE TRAY CHANGES	JD	MSO	42S1

REVISIONS

CONTRACT CHANGE ORDER NO. _____
SHEET ____ OF ____

Bob Zandipour
DESIGN OVERSIGHT

SIGN OFF DATE

DESIGN DETAIL SHEET (METRIC) (REV. 3/1/98)

	BY	CHECKED
DESIGN	J. Dones	M. S. Owyang
DETAILS	L. Reyes	J. Dones
QUANTITIES	J. Dones	P. McNamee

PREPARED FOR THE STATE OF CALIFORNIA DEPARTMENT OF TRANSPORTATION

Brady Nadell
PROJECT ENGINEER

BRIDGE NO. 34-0006
KILOMETER POST 13.2/13.9

SAS SUPERSTRUCTURE

OVERALL CABLE TRAY SUPPORT LOCATION PLAN PP 23 TO PP 46 - SHEET 2 OF 6

AS-16L

SHEET 16L OF 16

CU 04251
EA 0120F1

ORIGINAL SCALE IN MILLIMETERS FOR REDUCED PLANS 0 10 20 30 40 50 60 70 80 90 100

DISREGARD PRINTS BEARING EARLIER REVISION DATES

REVISION DATES (PRELIMINARY STAGE ONLY)

FILE => T:\13103\MS\pse\SAS Struc\CCO\SAS CCO42S1\CCO 42S1 Final Submittal 2008-07-11\04-0120f1_0086S11.dgn

USERNAME => llorrico DATE PLOTTED => 7/11/2008 TIME PLOTTED => 1:56:38 PM

$FREQUEST

DIST	COUNTY	ROUTE	KILOMETER POST TOTAL PROJECT	SHEET No	TOTAL SHEETS
04	SF	80	13.2/13.9	86 S12	1204

REGISTERED CIVIL ENGINEER 2/22/08 DATE

PLANS APPROVAL DATE

REGISTERED PROFESSIONAL ENGINEER Mee Shing Owyang No. 24960 Exp. 12/31/08 CIVIL STATE OF CALIFORNIA

The State of California or its officers or agents shall not be responsible for the accuracy or completeness of electronic copies of this plan sheet.

Parsons Brinckerhoff Quade & Douglas, Inc.
303 Second Street, Suite 700N
San Francisco, CA 94107

Caltrans now has a web site! To get to the web site, go to: http://www.dot.ca.gov

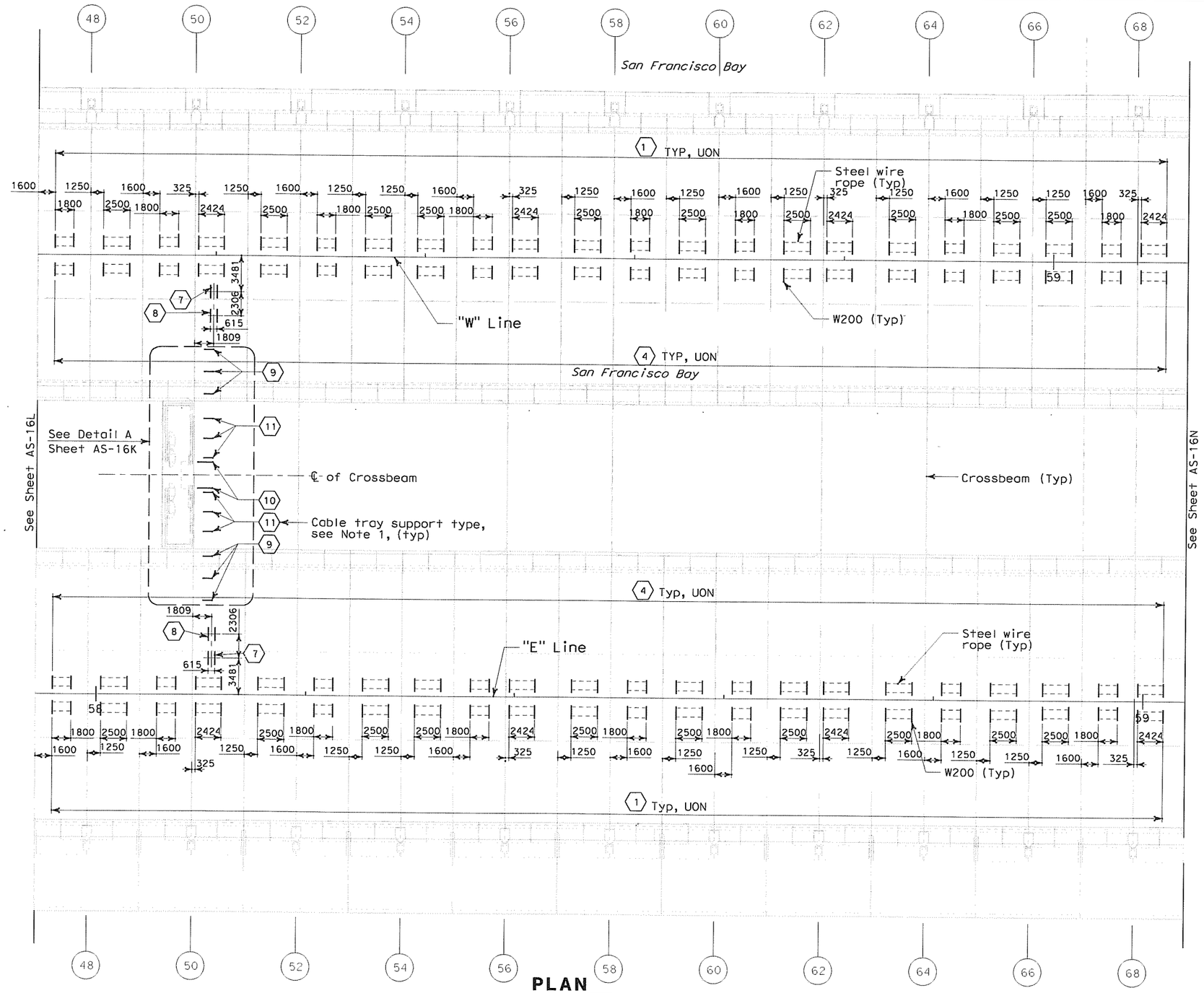

PLAN
SCALE: 1:200

ALL DIMENSIONS ARE IN MILLIMETERS UNLESS OTHERWISE SHOWN

NOTE:

1. For cable tray support type, see Table A sheet AS-16R.

REQUEST FOR INFORMATION NOT ADDRESSED IN THIS CCO REMAIN IN FORCE

MARK	DATE	DESCRIPTIONS	BY	CH'D	CCO#
0	02/25/08	CABLE TRAY CHANGES	JD	MSO	42S1

REVISIONS

CONTRACT CHANGE ORDER NO. _____
SHEET _____ OF _____

Bob Zandipour
DESIGN OVERSIGHT

SIGN OFF DATE

DESIGN DETAIL SHEET (METRIC) (REV. 3/1/98)

	BY	CHECKED
DESIGN	J. Dones	M. S. Owyang
DETAILS	L. Reyes	J. Dones
QUANTITIES	J. Dones	P. McNamee

ORIGINAL SCALE IN MILLIMETERS FOR REDUCED PLANS 0 10 20 30 40 50 60 70 80 90 100

PREPARED FOR THE STATE OF CALIFORNIA DEPARTMENT OF TRANSPORTATION

Brady Nadell
PROJECT ENGINEER

CU 04251
EA 0120F1

BRIDGE NO. 34-0006
KILOMETER POST 13.2/13.9

SAS SUPERSTRUCTURE

OVERALL CABLE TRAY SUPPORT LOCATION PLAN PP 47 TO PP 68 - SHEET 3 OF 6

AS-16M

DISREGARD PRINTS BEARING EARLIER REVISION DATES

REVISION DATES (PRELIMINARY STAGE ONLY)

SHEET 16M OF 16

FILE => T:\13103\MS\pse\SAS Struc\CCO\SAS CCO42S1\CCO 42S1 Final Submittal 2008-07-11\04-0120f1_0086S12.dgn

USERNAME => florico DATE PLOTTED => 7/11/2008 TIME PLOTTED => 1:57:00 PM

$REQUEST

DIST	COUNTY	ROUTE	KILOMETER POST TOTAL PROJECT	SHEET No	TOTAL SHEETS
04	SF	80	13.2/13.9	86 S13	1204

REGISTERED CIVIL ENGINEER 2/22/08 DATE

PLANS APPROVAL DATE

REGISTERED PROFESSIONAL ENGINEER Mee Shing Owyang No. 24960 Exp. 12/31/08 CIVIL STATE OF CALIFORNIA

The State of California or its officers or agents shall not be responsible for the accuracy or completeness of electronic copies of this plan sheet.

Parsons Brinckerhoff Quade & Douglas, Inc.
303 Second Street, Suite 700N
San Francisco, CA 94107

Caltrans now has a web site! To get to the web site, go to: http://www.dot.ca.gov

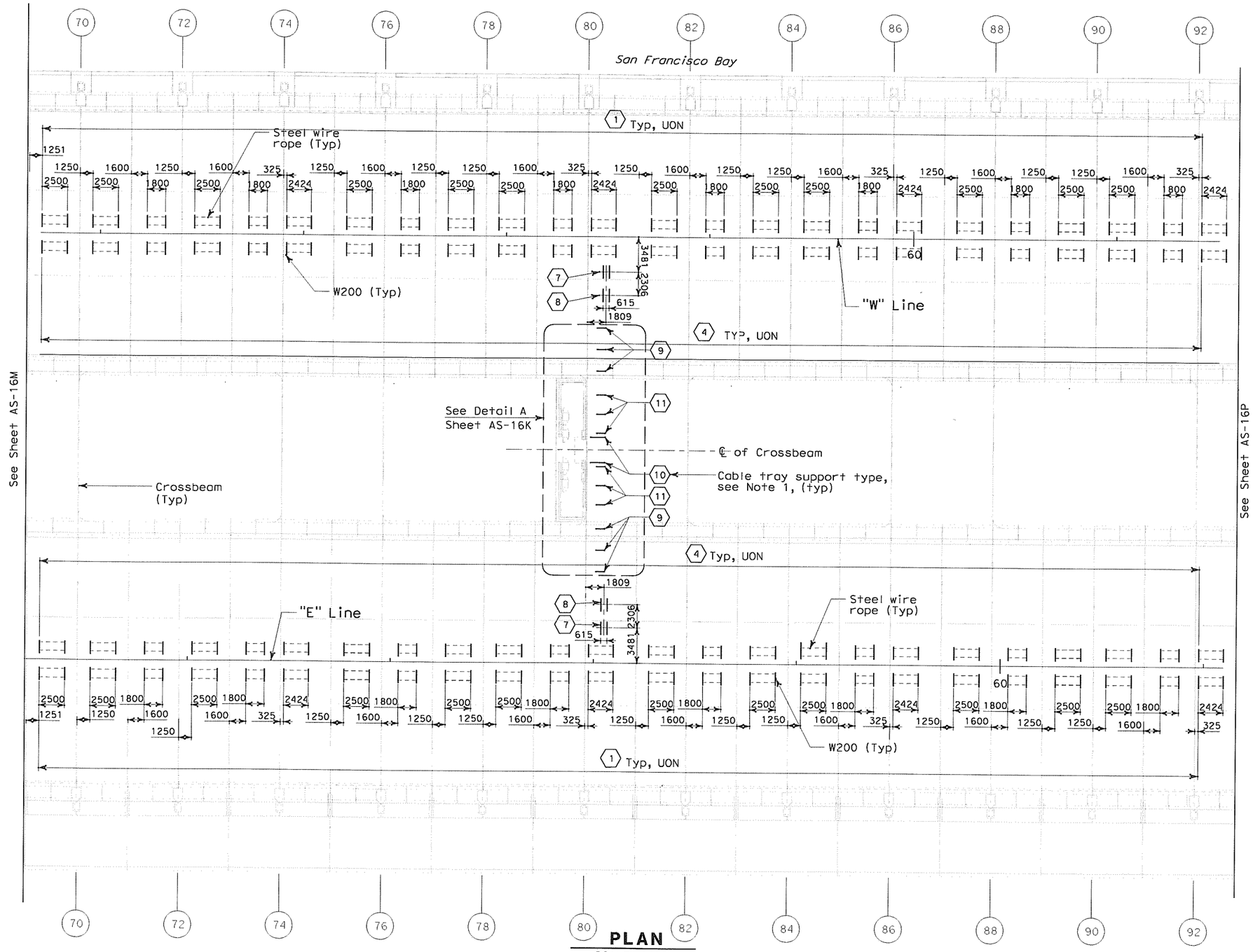

PLAN
SCALE: 1:200

ALL DIMENSIONS ARE IN MILLIMETERS UNLESS OTHERWISE SHOWN

Caltrans Metric

NOTE:

1. For cable tray support type, see Table A sheet AS-16R.

REQUEST FOR INFORMATION NOT ADDRESSED IN THIS CCO REMAIN IN FORCE

MARK	DATE	DESCRIPTIONS	BY	CH'D	CCO#
0	02/25/08	CABLE TRAY CHANGES	JD	MSO	42S1

REVISIONS

CONTRACT CHANGE ORDER NO. _____
SHEET _____ OF _____

Bob Zandipour
DESIGN OVERSIGHT

SIGN OFF DATE

DESIGN DETAIL SHEET (METRIC) (REV. 3/1/98)

	BY	CHECKED
DESIGN	J. Dones	M. S. Owyang
DETAILS	L. Reyes	J. Dones
QUANTITIES	J. Dones	P. McNamee

ORIGINAL SCALE IN MILLIMETERS FOR REDUCED PLANS 0 10 20 30 40 50 60 70 80 90 100

PREPARED FOR THE STATE OF CALIFORNIA DEPARTMENT OF TRANSPORTATION

Brady Nadell
PROJECT ENGINEER

CU 04251
EA 0120F1

BRIDGE NO. 34-0006
KILOMETER POST 13.2/13.9

DISREGARD PRINTS BEARING EARLIER REVISION DATES

REVISION DATES (PRELIMINARY STAGE ONLY)

SAS SUPERSTRUCTURE

OVERALL CABLE TRAY SUPPORT LOCATION PLAN PP 69 TO PP 92 - SHEET 4 OF 6

AS-16N

SHEET 16N OF 16

FILE => T:\13103\MS\pse\SAS Struc\CCO\SAS CCO42S1\CCO 42S1 Final Submittal 2008-07-11\04-0120F1_0086S13.dgn

USERNAME => llorico DATE PLOTTED => 7/11/2008 TIME PLOTTED => 1:57:22 PM

SFREQUEST

DIST	COUNTY	ROUTE	KILOMETER POST TOTAL PROJECT	SHEET No	TOTAL SHEETS
04	SF	80	13.2/13.9	86 S14	1204

REGISTERED CIVIL ENGINEER 2/22/08 DATE

PLANS APPROVAL DATE

REGISTERED PROFESSIONAL ENGINEER Mee Shing Owyang No. 24960 Exp. 12/31/08 CIVIL STATE OF CALIFORNIA

The State of California or its officers or agents shall not be responsible for the accuracy or completeness of electronic copies of this plan sheet.

Parsons Brinckerhoff Quade & Douglas, Inc.
303 Second Street, Suite 700N
San Francisco, CA 94107

Caltrans now has a web site! To get to the web site, go to: http://www.dot.ca.gov

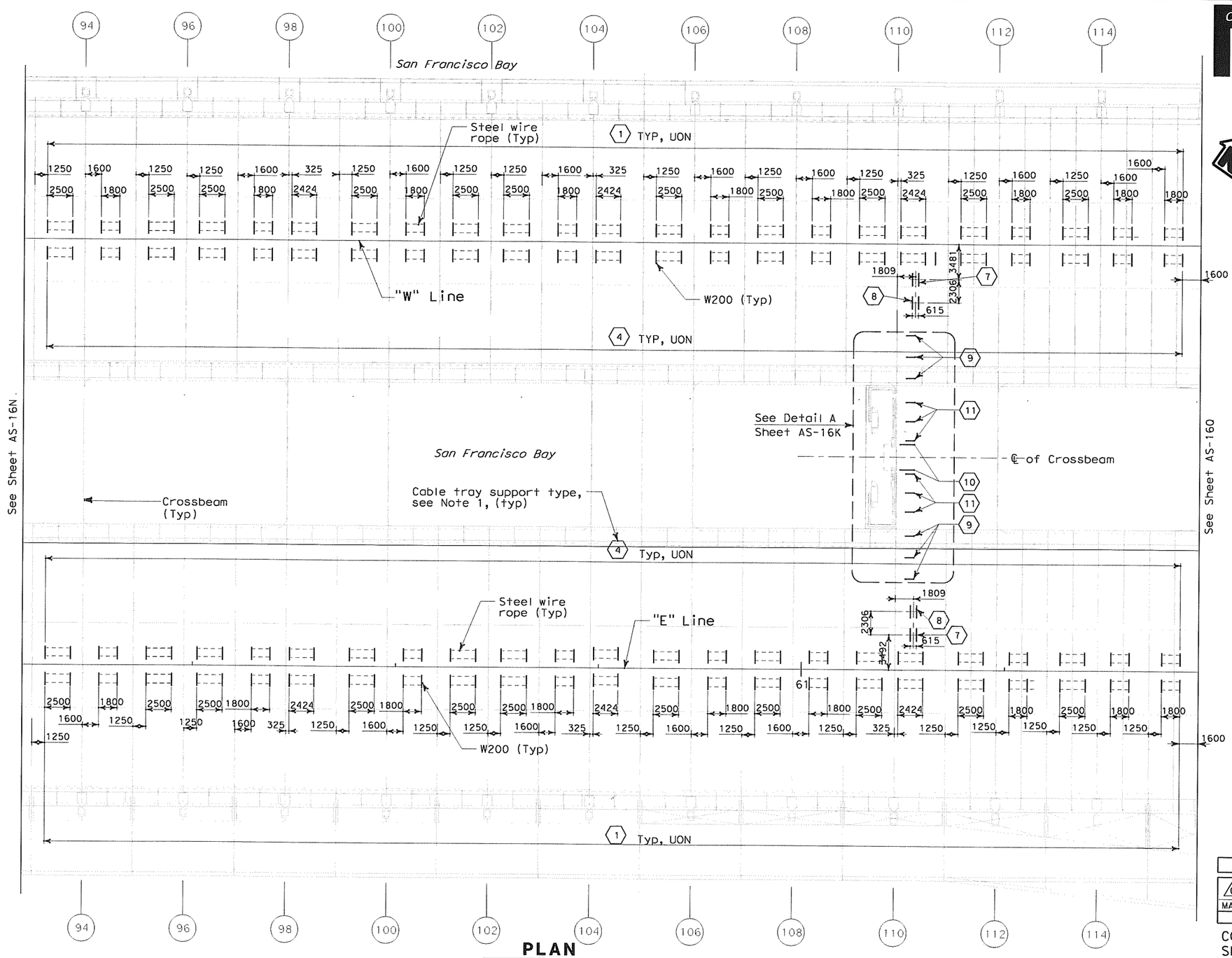

PLAN
SCALE: 1:200

ALL DIMENSIONS ARE IN MILLIMETERS UNLESS OTHERWISE SHOWN

NOTE:

1. For cable tray support type, see Table A sheet AS-16R.

REQUEST FOR INFORMATION NOT ADDRESSED IN THIS CCO REMAIN IN FORCE

MARK	DATE	DESCRIPTIONS	BY	CH'D	CCO#
0	02/25/08	CABLE TRAY CHANGES	JD	MSO	42S1

REVISIONS

CONTRACT CHANGE ORDER NO. _____
SHEET _____ OF _____

Bob Zandipour
DESIGN OVERSIGHT
SIGN OFF DATE

	BY	CHECKED
DESIGN	D. Dones	M. S. Owyang
DETAILS	L. Reyes	J. Dones
QUANTITIES	J. Dones	P. McNamee

PREPARED FOR THE STATE OF CALIFORNIA DEPARTMENT OF TRANSPORTATION

Brady Nadell
PROJECT ENGINEER

BRIDGE NO. 34-0006
KILOMETER POST 13.2/13.9

SAS SUPERSTRUCTURE

OVERALL CABLE TRAY SUPPORT LOCATION PLAN PP 93 TO PP 115 - SHEET 5 OF 6

AS-16P

SHEET 16P OF 16

DISREGARD PRINTS BEARING EARLIER REVISION DATES

REVISION DATES (PRELIMINARY STAGE ONLY)

DESIGN DETAIL SHEET (METRIC) (REV. 3/1/98)

ORIGINAL SCALE IN MILLIMETERS FOR REDUCED PLANS 0 10 20 30 40 50 60 70 80 90 100

CU 04251
EA 0120F1

FILE => T:\13103\MS\pse\SAS Struc\CCO\SAS CCO42S1\CCO 42S1 Final Submittal 2008-07-11\04-0120f1_0086S14.dgn

USERNAME => tlorico DATE PLOTTED => 7/11/2008 TIME PLOTTED => 1:57:44 PM

$FREQUEST

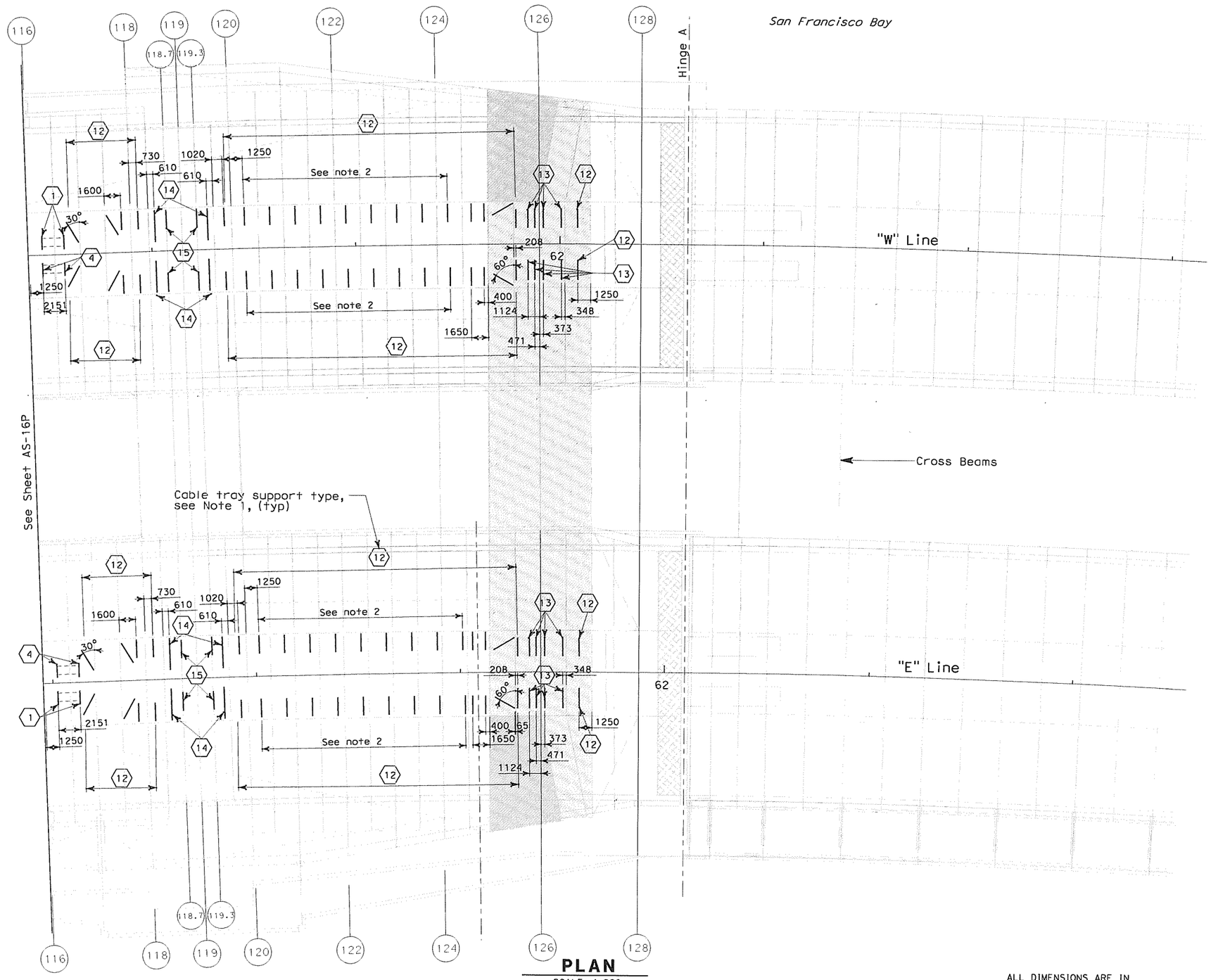

PLAN

SCALE: 1:200

DIST	COUNTY	ROUTE	KILOMETER POST TOTAL PROJECT	SHEET No	TOTAL SHEETS
04	SF	80	13.2/13.9	86 S15	1204

REGISTERED CIVIL ENGINEER 2/22/08 DATE

PLANS APPROVAL DATE

REGISTERED PROFESSIONAL ENGINEER Mee Shing Owyang No. 24960 Exp. 12/31/08 CIVIL STATE OF CALIFORNIA

The State of California or its officers or agents shall not be responsible for the accuracy or completeness of electronic copies of this plan sheet.

Parsons Brinckerhoff Quade & Douglas, Inc.
303 Second Street, Suite 700N
San Francisco, CA 94107

Caltrans now has a web site! To get to the web site, go to: http://www.dot.ca.gov

NOTES:

1. For cable tray support type, see Table A sheet AS-16R.
2. Center one cable tray support in each space between floor beams.

REQUEST FOR INFORMATION NOT ADDRESSED IN THIS CCO REMAIN IN FORCE

MARK	DATE	DESCRIPTIONS	BY	CH'D	CCO#
0	02/25/08	CABLE TRAY CHANGES	JD	MSO	42S1

REVISIONS

CONTRACT CHANGE ORDER NO. _____
SHEET _____ OF _____

ALL DIMENSIONS ARE IN MILLIMETERS UNLESS OTHERWISE SHOWN

Bob Zandipour
DESIGN OVERSIGHT

SIGN OFF DATE

DESIGN DETAIL SHEET (METRIC) (REV. 3/1/98)

	BY	CHECKED
DESIGN	J. Dones	M. S. Owyang
DETAILS	L. Reyes	J. Dones
QUANTITIES	J. Dones	P. McNamee

PREPARED FOR THE STATE OF CALIFORNIA DEPARTMENT OF TRANSPORTATION

Brady Nadell
PROJECT ENGINEER

BRIDGE NO. 34-0006
KILOMETER POST 13.2/13.9

SAS SUPERSTRUCTURE

OVERALL CABLE TRAY SUPPORT LOCATION PLAN PP 93 TO HINGE A - SHEET 6 OF 6

AS-16Q

ORIGINAL SCALE IN MILLIMETERS FOR REDUCED PLANS 0 10 20 30 40 50 60 70 80 90 100

CU 04251
EA 0120F1

DISREGARD PRINTS BEARING EARLIER REVISION DATES

REVISION DATES (PRELIMINARY STAGE ONLY)

SHEET 16Q OF 16

FILE => T:\13103\MS\pse\SAS Struc\CCO\SAS CCO42S1\CCO 42S1 Final Submittal 2008-07-11\04-0120f1_0086S15.dgn

USERNAME => llorico DATE PLOTTED => 7/11/2008 TIME PLOTTED => 1:58:06 PM

$FREQUEST

DIST	COUNTY	ROUTE	KILOMETER POST TOTAL PROJECT	SHEET No	TOTAL SHEETS
04	SF	80	13.2/13.9	86 S16	1204

Caltrans Metric

REGISTERED CIVIL ENGINEER 2/22/08 DATE

PLANS APPROVAL DATE

REGISTERED PROFESSIONAL ENGINEER Mee Shing Owyang No. 24960 Exp. 12/31/08 CIVIL STATE OF CALIFORNIA

The State of California or its officers or agents shall not be responsible for the accuracy or completeness of electronic copies of this plan sheet.

Parsons Brinckerhoff Quade & Douglas, Inc.
303 Second Street, Suite 700N
San Francisco, CA 94107

Caltrans now has a web site! To get to the web site, go to: http://www.dot.ca.gov

TABLE A

ITEM	DESCRIPTION	DETAIL SHEET	REMARKS
1	TYPE I	AS-11	
2A	TYPE I MODIFIED	AS-16A/SECTION A AS-16B/SECTION C AS-16C/SECTION H AS-16D/SECTION L	WESTBOUND
2B	TYPE I MODIFIED	AS-16F/SECTION C AS-16G/SECTION G AS-16H/SECTION K AS-16H/SECTION L	EASTBOUND
3A		AS-16A/SECTION A AS-16B/SECTION E AS-16C/SECTION F AS-16D/SECTION K	
3B	TYPE I MODIFIED	AS-16E/SECTION B AS-16F/SECTION D AS-16G/SECTION H AS-16G/SECTION J	EASTBOUND
4	TYPE II	AS-11	
5A	TYPE II MODIFIED	AS-16B/SECTION D AS-16B/SECTION C AS-16C/SECTION H AS-16D/SECTION J	WESTBOUND
5B	TYPE II MODIFIED	AS-16F/SECTION C AS-16G/SECTION F AS-16G/SECTION G AS-16H/SECTION M	EASTBOUND
6A	TYPE II MODIFIED	AS-16A/SECTION B AS-16B/SECTION E AS-16C/SECTION F AS-16C/SECTION G	WESTBOUND
6B	TYPE II MODIFIED	AS-16E/SECTION A AS-16F/SECTION D AS-16F/SECTION E AS-16G/SECTION H	EASTBOUND
7	TYPE V	AS-14	
8	TYPE VI	AS-14	
9	TYPE VII	AS-15	
10	TYPE VIIA	AS-15	
11	TYPE VIIB	AS-15	
12	TYPE VIII	AS-15	
13	TYPE IX	AS-15	
14	TYPE X	AS-16	
15	TYPE XI	AS-16J	

REQUEST FOR INFORMATION NOT ADDRESSED IN THIS CCO REMAIN IN FORCE

MARK	DATE	DESCRIPTIONS	BY	CH'D	CCO#
0	02/25/08	CABLE TRAY CHANGES	JD	MSO	4251

REVISIONS

CONTRACT CHANGE ORDER NO. _____
SHEET ____ OF ____

ALL DIMENSIONS ARE IN MILLIMETERS UNLESS OTHERWISE SHOWN

Bob Zandipour
DESIGN OVERSIGHT
SIGN OFF DATE

	BY	CHECKED
DESIGN	J. Dones	M. S. Owyang
DETAILS		
QUANTITIES		

PREPARED FOR THE STATE OF CALIFORNIA DEPARTMENT OF TRANSPORTATION

Brady Nadell
PROJECT ENGINEER

BRIDGE NO. 34-0006
KILOMETER POST 13.2/13.9

SAS SUPERSTRUCTURE
OVERALL CABLE TRAY SUPPORT LOCATIONS TABLE A

AS-16R

SHEET 16R OF 16

DESIGN DETAIL SHEET (METRIC) (REV. 3/1/98)

ORIGINAL SCALE IN MILLIMETERS FOR REDUCED PLANS 0 10 20 30 40 50 60 70 80 90 100

CU 04251
EA 0120F1

DISREGARD PRINTS BEARING EARLIER REVISION DATES

REVISION DATES (PRELIMINARY STAGE ONLY)

FILE => T:\13103\MS\pse\SAS Struc\CCO\SAS CC04251\CCO 4251 Final Submittal 2008-07-11\04-0120F1_0086S16.dgn

USERNAME => lflorico DATE PLOTTED => 7/11/2008 TIME PLOTTED => 11:58:40 PM

$FREQUEST

TRAFFIC OPERATIONS SYSTEMS (TOS)

AVO	Analog Video Output
CCR	Camera Control Receiver
CCU	Camera Control Unit
CIA	Controller Interface Assembly
COMM	Communication
FDU	Fiber Distribution Unit
F/O	Fiber Optic
FODM	Fiber Optic Data Modem
FDC	Fiber Optic Drop Cable
FPC	Fiber Optic Pigtail Cable
FSC	Fiber Splice Closure
FTC	Fiber Optic Trunkline Cable
IF	Input File
MVDS	Microwave Vehicle Detection Sensor
PDA	Power Distribution Assembly
PL	Preformed Loop Detection Station
SCA	Serial Cable Assembly
SMFO	Single Mode Fiber Optic
TB	Terminal Box
TSC	Trunkline Splice Closure
TVCP	CCTV Camera Control Power Cable
TVC	CCTV Camera Control Cable
TVL	CCTV Camera Video Cable
TVP	CCTV Camera Power Cable
VTDD	Video Transmitter Duplex Data

PROJECT NOTES

1. 27C, 2#12 + #12 G.
2. 27C, 2#10 + #10 G.
3. 27C, 4#10 + #10 G.
4. 27C, 3#10 + #10 G.
5. 27C (Type 4), 2#12 + #12 G.
6. 27C (Type 4), 2#10 + #10 G.
7. 41C, 2-6 pairs #18, IS/OA.
8. 78C, 50 Pairs #18, IS/OA.
9. 27C, 3/C #6 + #8G.
10. 21C, 2-1 pair #18 (for Call Box signal) shielded pairs and overall shield.
11. 21C, 3#12 (for Call Box power).
12. 21C, (4) 1 pair #18 (for Call Box signal). Part of (2) 1-2 pairs #18, shielded pairs and overall shield.
13. 78C, 2#2 + #6 G and 2#10 + #10 G (for CMS Power).
14. 78C, Harness #4 and Harness #5 (for CMS Signal).
15. 41C, Cable type TVP and TVCP (for CCTV Power).
16. 41C, Cable type TVC and TVL (for CCTV Control Signal).
18. 41C, Cable type MVDS DLC (for MVDS Signal).
20. 78C, Cable type 10 DLC (for Preformed Loop Signal).
21. 27C (Flexible Conduit) 6#10 + #10 G.
22. 27C (Flexible Conduit) 3#10 + #10 G.
23. 27C, 7#10 + #10 G.
24. 27C, 6#10 + #10 G.

PROJECT NOTES (Continuation)

25. 27C, 7#10 + #10 G.
26. 41C, 3#6 + #8 G.
27. 41C, 3#8 + #10 G.
28. 21C, PVC coated - 2#10 + #10 G.
29. 21C, PVC coated, 3#12 (for Call Box Power).
30. 500 kcmil Bare Copper Wire.
31. 250 kcmil Bare Copper Wire.
32. #4/0 Bare Copper Wire.
33. #2 Bare Copper Wire.
34. 41C, 3#6 + #8 G, 3#8 + #10 G.
35. 41C, 6#8 + #10 G.
36. 21C, PVC coated, 1-2 pairs #18 (For Call Box signal).
37. Metal clad type cable with PVC overall jacket 3/C #10 (for Bike Path lighting).
38. Metal clad type cable with PVC overall jacket 1-2 pairs #18, shielded pairs and overall shield (for Call Box signal).
39. Metal clad type cable with PVC overall jacket 3/C #12 (for Call Box signal).
40. 78C, Cable Type A Fiber Optic.
41. 21C, (Flexible Conduit) 2#10 + 10 G.
42. 27C, 2#12 + #12G, 2#10 + #10G.
43. 21C, (Flexible conduit) 2#12 + 12 G.
44. 41C, 2#12 + #12 G, 6#10 + #10 G.
45. 27C, 2#12 + #12 G, 4#10 + #10 G.
46. 27C, Liquidtight flexible metal conduit, 4#10 + #10G.
47. 41C, Liquidtight flexible metal conduit, (MVDS DLC).
48. 27C, 3#6 + #8G. Liquidtight flexible metal conduit.

GENERAL NOTES

1. Conduit routing is diagrammatic. Pull box locations shall be located as shown on plan drawings. The Contractor shall provide additional pull boxes as required. Exact locations of equipment and devices may be adjusted depending on field conditions or by the Engineer.
2. Minimum size of conduits shall be 21 mm. Exposed conduits shall be PVC coated rigid galvanized steel, and conduits located inside girder shall be rigid galvanized steel.
3. Conduit fittings for 78 mm conduits and larger shall have a 610 mm minimum bending radius.
4. All conduits, including spares, shall be provided with pull wires prior to cable installations.
5. All equipment and devices shall be provided with nameplate tags per drawings.
6. All feeders and branch circuits shall be provided with ground wire.
7. 15 kV splice boxes shall be installed as shown and permanently marked "DANGER-HIGH VOLTAGE-KEEP OUT". The letters shall be block type and at least 50 mm in height.
8. The Contractor shall label all conductors and cables per wiring diagrams.
9. Padlocks shall be installed on all cabinets located on the platforms to prevent unauthorized access.
10. Call boxes will be State-furnished. (The Contractor shall install and terminate conductors per wiring diagram.
11. Ladder type cable trays shall be installed for each 15 kV and 600 V systems.
12. Solid bottom cable trays shall be installed for each low level signals, CALTRANS communications, fiber optic systems, and for Non-Caltrans utilities.
13. For Strong Motion Detection System general notes, see sheet E-361.
14. All E sheets are accurate for electrical work only.
15. All dimensions are in millimeters unless otherwise shown.
16. All unused conductors inside pull boxes shall be taped and coiled.

Caltrans Metric

DIST	COUNTY	ROUTE	KILOMETER POST TOTAL PROJECT	SHEET No	TOTAL SHEETS
04	SF	80	13.2/13.9	93R2	1204

REGISTERED ELECTRICAL ENGINEER 12/19/02 DATE

12-6-04
PLANS APPROVAL DATE

REGISTERED PROFESSIONAL ENGINEER JENS ERLINGSSON No. 8249 Exp. 9/30/06 ELECTRICAL STATE OF CALIFORNIA

PB POWER, Inc.
A Parsons Brinckerhoff Company
303 Second St., Suite 700N
San Francisco, CA 94107-1317

The State of California or its officers or agents shall not be responsible for the accuracy or completeness of electronic copies of this plan sheet.

Caltrans now has a web site! To get to the web site, go to http://www.dot.ca.gov

REGISTERED PROFESSIONAL ENGINEER S. A. ESTOOLE, JR. No. E-10151 Exp. 12/31/2008 ELECTRICAL STATE OF CALIFORNIA

FOR REVISION ONLY

REQUEST FOR INFORMATION NOT ADDRESSED IN THIS CCO REMAIN IN FORCE

MARK	DATE	DESCRIPTIONS	BY	CH'D	CCO#
2	02/25/08	CABLE TRAY CHANGES	RG	SE	42S1
1	02/19/08	ELECTRICAL MODIFICATIONS	MP EL	RR	42

REVISIONS

CONTRACT CHANGE ORDER NO. _____
SHEET _____ OF _____

17. "Similar" when shown on the plans means this detail is applicable to different structure and conduit sizes.
18. Electrical fixtures shall not be field welded to the box girders or crossbeams. All welding to the box girders and crossbeams shall be shown on the box girder and crossbeam shop drawings for review and approval by the Engineer.
19. All welding of electrical fixtures to the tower shall be shown on the tower shop drawings for review and approval by the Engineer.
20. All connections to steel elements of the self-anchored suspension bridge superstructure of electrical equipment and fixtures, including conduits, pull boxes, lighting fixtures, messenger cables and others, shall be shop welded or bolted. All connection details shall appear on the working drawings for review and approval by the Engineer.
21. Prior to ordering any cable tray support structures, the Contractor shall:
    - Refer to Structural sheets to determine the locations of cable tray support structures.
    - Determine, based upon field conditions, when and where to use cable tray vertical or horizontal bends, horizontal tees or reducers.
    - Refer to AS-sheets to determine the type of cable tray support to use based on field conditions.
    - Cable tray support structures shown on the AS-sheets are generic and may have to be adapted to suit field conditions.
    - All modifications to the cable tray support structures as shown on the AS-sheets shall be approved by the Resident Engineer.
22. All installation of electrical conduit, equipment or pull boxes shall be either shop welded or bolted.
23. (2) All cable trays shall be securely anchored to support. Appropriate type of anchors (hold down brackets, hold down clamps or guides) shall be used to suit the cable tray type, location and supports. For similar attachment details, see TYPE I & II on E-122A and E-205A.

ELECTRICAL NOTES AND ABBREVIATIONS

E-8

CALCULATED/DESIGNED BY	AB	DATE 08/02	REVISED BY IAH
CHECKED BY	JW	09/02	DATE REVISED 3/04

DESIGN OVERSIGHT: BEHZAD GOLEMOHAMMADI

STATE OF CALIFORNIA - DEPARTMENT OF TRANSPORTATION
Caltrans

LAST REVISION 00-00-00 | DATE PLOTTED => 7/11/2008 | TIME PLOTTED => 1:59:32 PM

FOR REDUCED PLANS ORIGINAL SCALE IS IN MILLIMETERS 0 20 40 60 80

DGN FILE =>I:\13103\MS\pse\SAS Struc\CCO\SAS CCO42S1\CCO 42S1 Final Submittal 2008-07-11\04-0120f1_0093R02.dgn
USERNAME =>llorico

CU 04251 | EA 0120F1

DIST	COUNTY	ROUTE	KILOMETER POST TOTAL PROJECT	SHEET No.	TOTAL SHEETS
04	SF	80	13.2/13.9	103 R1	1204

Jens Erlingsson 12/19/02
REGISTERED ELECTRICAL ENGINEER DATE

12-6-04
PLANS APPROVAL DATE

REGISTERED PROFESSIONAL ENGINEER JENS ERLINGSSON No. 8249 Exp. 9/30/06 ELECTRICAL STATE OF CALIFORNIA

PB POWER, Inc.
A Parsons Brinckerhoff Company
303 Second St., Suite 700N
San Francisco, CA 94107-1317

The State of California or its officers or agents shall not be responsible for the accuracy or completeness of electronic copies of this plan sheet.

Caltrans now has a web site! To get to the web site, go to http://www.dot.ca.gov

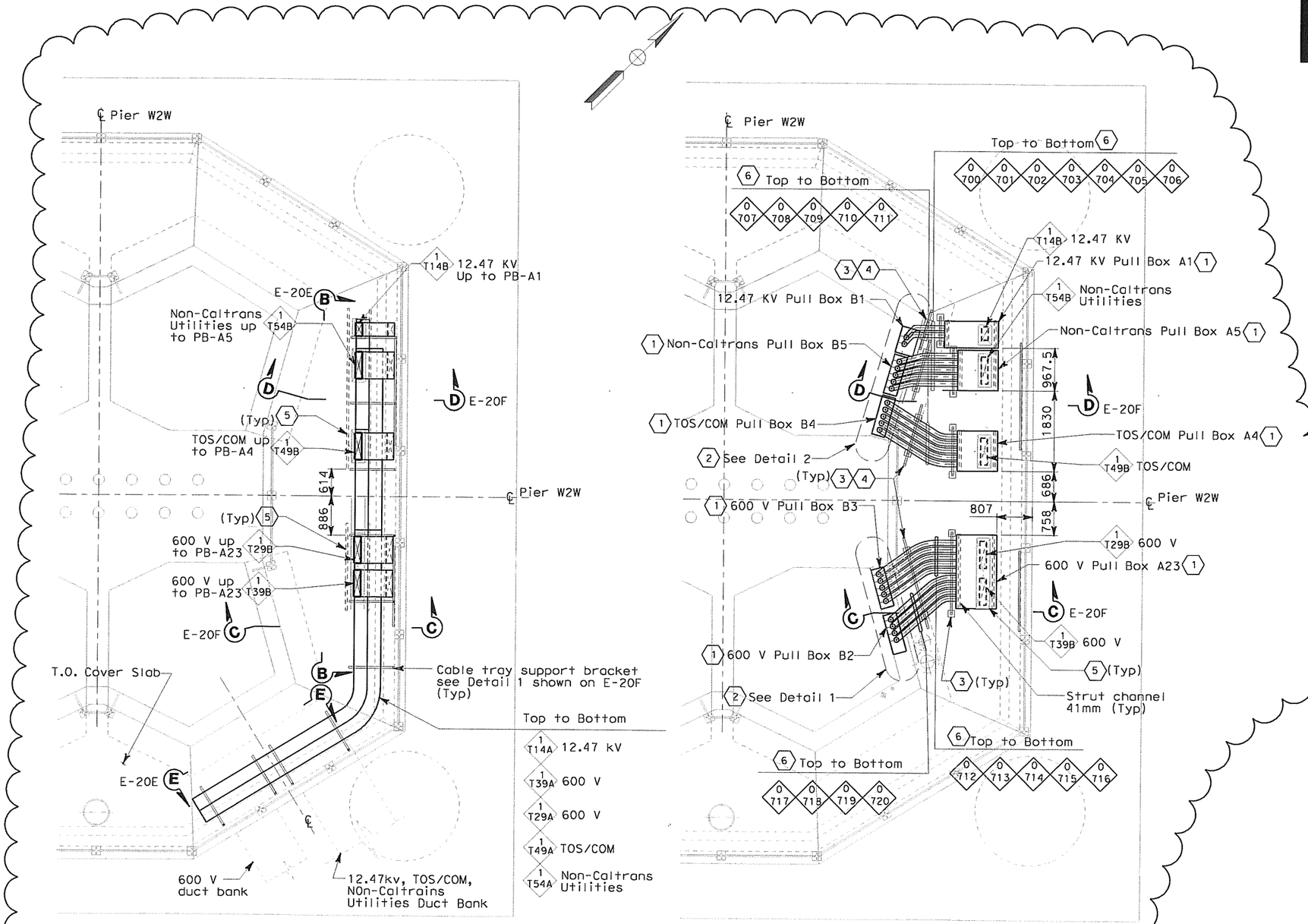

PLAN AT BELOW COVER PIER W2W
SCALE: 1:20

PLAN AT GRADE PIER W2W
SCALE: 1:20

NOTES:

1. References:
   - For duct bank and manhole plan, see sheet E-11.
   - For duct bank section, see sheet E-19.
   - For circuit and conduit/cable tray schedules, see sheets starting at E-401.
   - For foundation grounding, see sheet E-22.
   - For grounding interface, see sheet E-18.
   - For SAS Superstructure girder westbound grounding plan, see sheets E-111 and E-18.
   - For duct bank elevations at W2W, see sheet E-23.

SHEET NOTES:

1. For pull box sizes, opening and type see sheet E-20C.
2. For Details 1 and 2 see sheet E-20B.
3. For conduit support details see sheet E-20D.
4. Do not secure liquid tight metal flexible conduit at this support location.
5. For embedded strut channel and cable tray opening locations at pier W2 cover slab see E-20E.
6. Length of flexible conduits shall be provided for seismic movement. The maximum expansion displacement is 400mm.

REGISTERED PROFESSIONAL ENGINEER S. A. ESTOQUE, JR. No. E-10151 Exp. 12/31/2008 ELECTRICAL STATE OF CALIFORNIA

FOR REVISION ONLY

REQUEST FOR INFORMATION NOT ADDRESSED IN THIS CCO REMAIN IN FORCE

MARK	DATE	DESCRIPTIONS	BY	CH'D	CCO#
1	02/25/08	CABLE TRAY CHANGES	TW	RG SE	42S1

REVISIONS

CONTRACT CHANGE ORDER NO. _____
SHEET ____ OF ____

DETAILS
UNDERGROUND
PIER W2W PLAN AND SECTIONS
SCALE AS NOTED

E-20

CALCULATED/DESIGNED BY	IAH
CHECKED BY	AB
DATE	02/07
REVISED BY	
DATE REVISED	

DESIGN OVERSIGHT
BEHZAD GOLEMOHAMMADI

STATE OF CALIFORNIA - DEPARTMENT OF TRANSPORTATION
Caltrans

THIS PLAN IS ACCURATE FOR ELECTRICAL WORK ONLY.

ALL DIMENSIONS ARE IN MILLIMETERS UNLESS OTHERWISE SHOWN.

FOR REDUCED PLANS ORIGINAL SCALE IS IN MILLIMETERS 0 20 40 60 80

DGN FILE => T:\13103\MS\pse\SAS Struc\CCO\SAS CCO42S1\CCO 42S1 Final Submittal 2008-07-11\04-0120f1_0103R01.dgn
USERNAME => liorico

CU 04251 EA 0120F1

LAST REVISION 00-00-00
DATE PLOTTED => 7/11/2008
TIME PLOTTED => 2:01:29 PM

DIST	COUNTY	ROUTE	KILOMETER POST TOTAL PROJECT	SHEET NO	TOTAL SHEETS
04	SF	80	13.2/13.9	103 S1	1204

REGISTERED ELECTRICAL ENGINEER — DATE 2/22/08

REGISTERED PROFESSIONAL ENGINEER S. A. ESTOQUE, JR. No. E-10151 Exp. 12/31/2008 ELECTRICAL STATE OF CALIFORNIA

PLANS APPROVAL DATE

PB AMERICAS, Inc.
A Parsons Brinckerhoff Company
303 Second St., Suite 700N
San Francisco, CA 94107-1317

The State of California or its officers or agents shall not be responsible for the accuracy or completeness of electronic copies of this plan sheet.

Caltrans now has a web site! To get to the web site, go to http://www.dot.ca.gov

Caltrans Metric

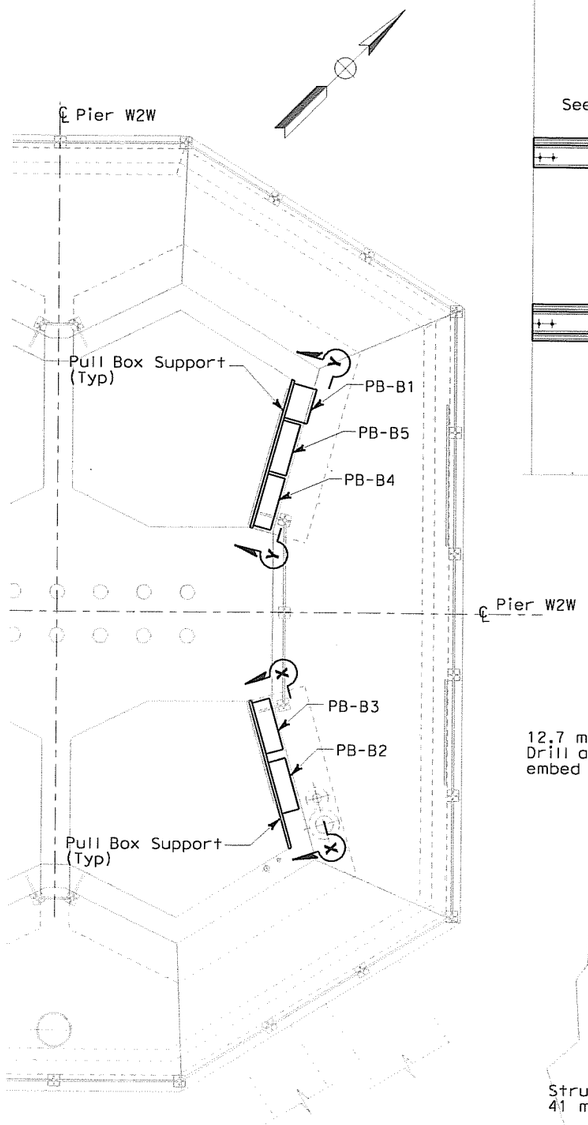

PLAN AT PIER W2W
PULL BOX MOUNTING AT FACE OF COLUMN
SCALE: 1:20

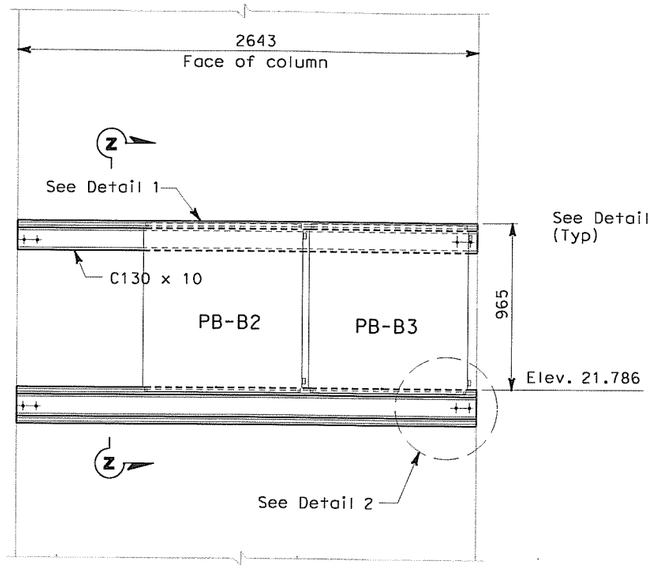

SECTION X-X (1)
PULL BOX SUPPORT
NO SCALE

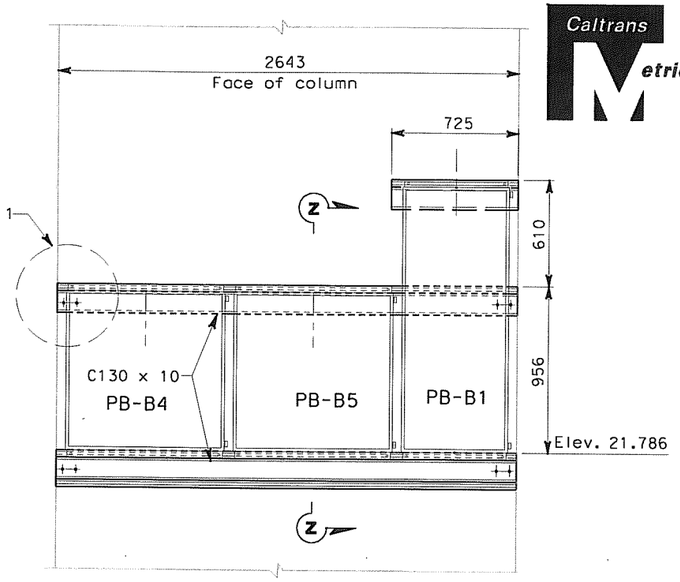

SECTION Y-Y (1)
PULL BOX SUPPORT
NO SCALE

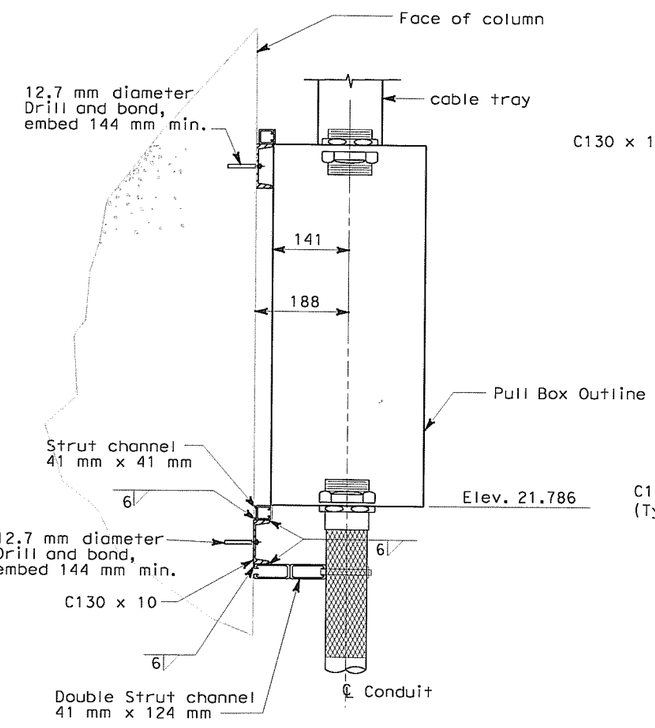

SECTION Z-Z
NO SCALE

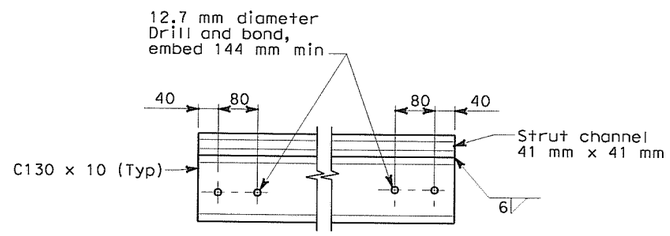

DETAIL 1
NO SCALE

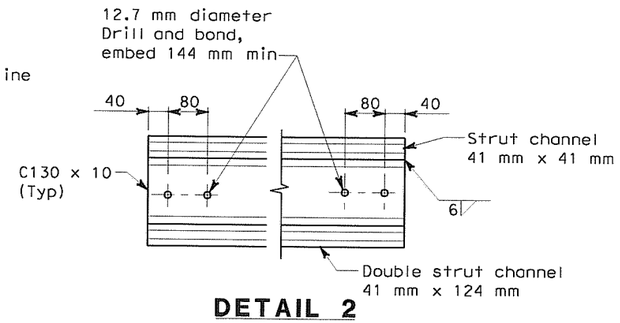

DETAIL 2
NO SCALE

NOTE:

1. Contractor shall verify all dimensions prior to start of work.

SHEET NOTES:

(1) For pull box sizes, location, opening and type, see E-20, E-20B, E-20C, and E-20D.

REQUEST FOR INFORMATION NOT ADDRESSED IN THIS CCO REMAIN IN FORCE

MARK	DATE	DESCRIPTIONS	BY	CH'D	CCO#
0	02/25/08	CABLE TRAY CHANGES	TW	RG SE	42S1

REVISIONS

CONTRACT CHANGE ORDER NO. _____
SHEET _____ OF _____

DETAILS
UNDERGROUND
PIER W2W PLANS AND SECTIONS
SCALE AS NOTED

CALCULATED/ DESIGNED BY	TW	DATE 7/07	REVISED BY	DATE REVISED
CHECKED BY	EJL	7/07		

DESIGN OVERSIGHT
BEHZAD GOLEMOHAMMADI

STATE OF CALIFORNIA - DEPARTMENT OF TRANSPORTATION
Caltrans

THIS PLAN IS ACCURATE FOR ELECTRICAL WORK ONLY.

ALL DIMENSIONS ARE IN MILLIMETERS UNLESS OTHERWISE SHOWN.

FOR REDUCED PLANS ORIGINAL SCALE IS IN MILLIMETERS 0 20 40 60 80

DGN FILE => T:\13103\MS\pse\SAS Struc\CCO\SAS CC042S1\CCO 42S1 Final Submittal 2008-07-11\04-0120f1_0103S01.dgn
USERNAME => llorico

CU 04251 | EA 0120F1

LAST REVISION 00-00-00 | DATE PLOTTED => 7/11/2008 TIME PLOTTED => 2:01:53 PM

E-20A

DIST	COUNTY	ROUTE	KILOMETER POST TOTAL PROJECT	SHEET No	TOTAL SHEETS
04	SF	80	13.2/13.9	103 S2	1204

REGISTERED ELECTRICAL ENGINEER — DATE 2/22/08

REGISTERED PROFESSIONAL ENGINEER S. A. ESTOQUE, JR. No. E-10151 Exp. 12/31/2008 STATE OF CALIFORNIA

PLANS APPROVAL DATE

PB AMERICAS, Inc.
A Parsons Brinckerhoff Company
303 Second St., Suite 700N
San Francisco, CA 94107-1317

The State of California or its officers or agents shall not be responsible for the accuracy or completeness of electronic copies of this plan sheet.

Caltrans now has a web site! To get to the web site, go to http://www.dot.ca.gov

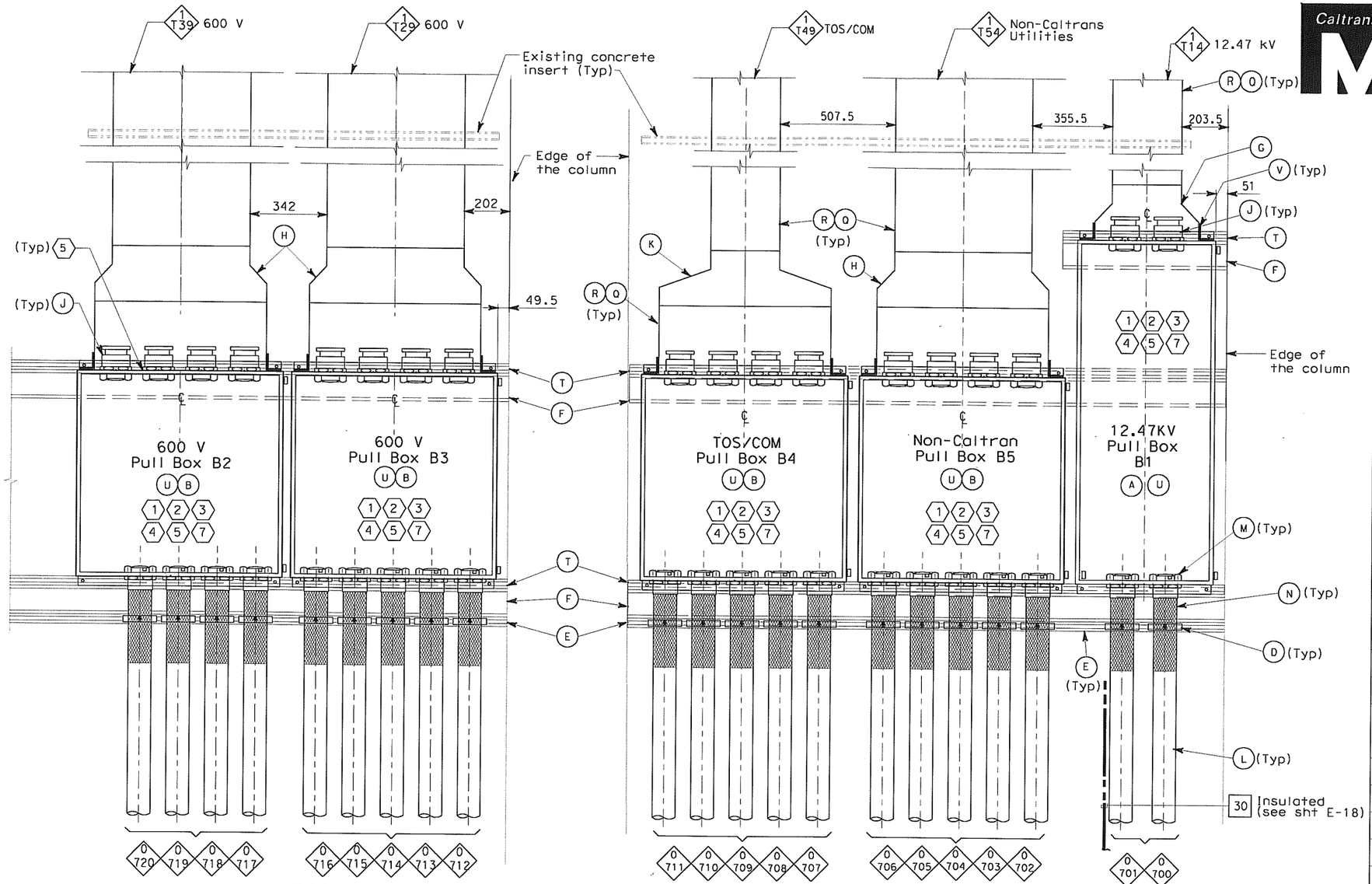

DETAIL 1 (6)
NO SCALE

DETAIL 2 (6)
NO SCALE

MATERIAL LIST

Item No.	Description
A	Pull Box, Nema 4X 1524 mm x 610 mm x 406 mm
B	Pull Box, Nema 4X 914 mm x 914 mm x 305 mm
C	Not used
D	Strut channel conduit clamp for 103 mm
E	Double strut channel 41 mm x 124 mm
F	Channel C130x10
G	Cable tray straight reducer (547 mm to 305 mm)
H	Cable tray straight reducer (762 mm to 610 mm)
J	103 mm conduit hub, 53 mm long nipple and insulated bushing
K	Cable tray straight reducer (762 mm to 305 mm)
L	Liquidtight flexible metal conduit, 103 mm
M	Liquidtight Insulated flexible metal conduit connector with insulated grounding bushing for 103 mm conduit
N	Strain relief grips for flexible conduit, 103 mm
P	Not used
Q	Cable tray, ladder type
R	Cable tray peaked cover and cover clamp
T	Strut channel 41 mm x 41 mm
U	Breather and Drain Hole
V	Tray to box connector plates

SHEET NOTES:

(1) For Pull Boxes location see E-20.

(2) For Pull Box sizes and opening see E-20C.

(3) For Pull Box mounting and support see E-20A.

(4) Contractor shall verify all the dimensions prior to start the work.

(5) To prevent moisture and water from entering enclosures, Contractor to provide sealant after all cables are pulled. Conduits and nipples without cables shall be capped for future use.

(6) Detail 1 & Detail 2 see sheet E-20.

(7) All liquidtight flexible metal conduit shall have integral continuous copper ground whether shown on the drawings or not. Bond conduit bushings together and to the metallic enclosures.

NOTE:

1. All cable/cables entering the liquidtight conduits from the pull box shall be provided with strain relief cable/cables grips attached from the vertical cable tray rungs.

REGISTERED PROFESSIONAL ENGINEER FADI WALIEDDINE No. 11465 Exp. 12/31/2009 ELECTRICAL STATE OF CALIFORNIA

FOR REVISION ONLY

REQUEST FOR INFORMATION NOT ADDRESSED IN THIS CCO REMAIN IN FORCE

MARK	DATE	DESCRIPTIONS	BY	CH'D	CCO#
0	02/25/08	CABLE TRAY CHANGES	TW	RG SE	42S1

REVISIONS

CONTRACT CHANGE ORDER NO. _____
SHEET _____ OF _____

DETAILS
UNDERGROUND
PIER W2W PLANS AND SECTIONS
SCALE AS NOTED

E-20B

THIS PLAN IS ACCURATE FOR ELECTRICAL WORK ONLY.

ALL DIMENSIONS ARE IN MILLIMETERS UNLESS OTHERWISE SHOWN.

FOR REDUCED PLANS ORIGINAL SCALE IS IN MILLIMETERS 0 20 40 60 80

DGN FILE =>T:\13103\MS\pse\SAS Struc\CCO\SAS CCO42S1\CCO 42S1 Final Submittal 2008-07-11\04-0120F1_0103S02.dgn
USERNAME =>garciar

CU 04251 | EA 0120F1

LAST REVISION 00-00-00 | DATE PLOTTED => 8/5/2008 TIME PLOTTED => 10:42:23 AM

STATE OF CALIFORNIA - DEPARTMENT OF TRANSPORTATION
Caltrans

DESIGN OVERSIGHT: BEHZAD GOLEMOHAMMADI

CALCULATED/DESIGNED BY: TW | DATE 7/07 | REVISED BY
CHECKED BY: EJL | 7/07 | DATE REVISED

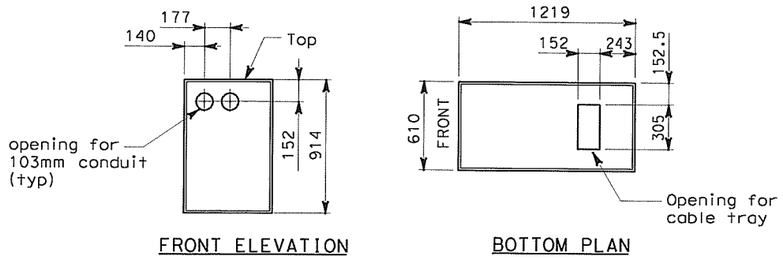

12.47 KV PULL BOX A1 (1)(2)(3)

TOP ACCESS
SCALE 1:20

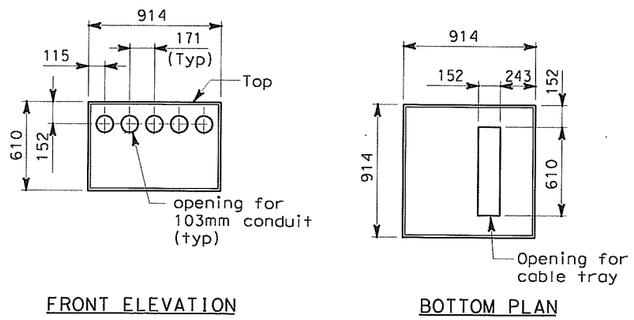

NON-CALTRANS PULL BOX A5 (1)(2)(3)

(FOR TOS/COM PULL BOX A4)
TOP ACCESS
SCALE 1:20

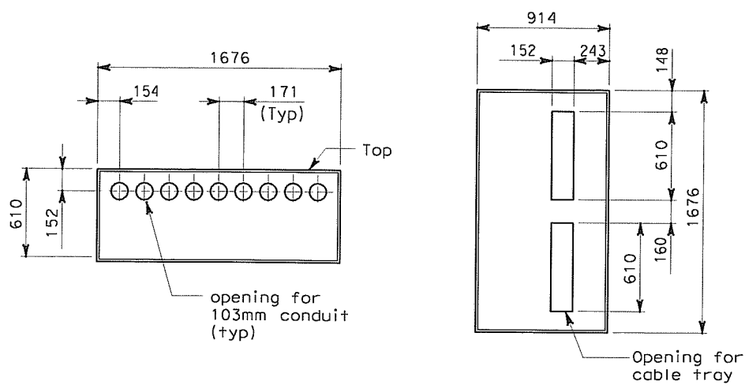

600 PULL BOX A23 (1)(2)(3)

TOP ACCESS
SCALE 1:20

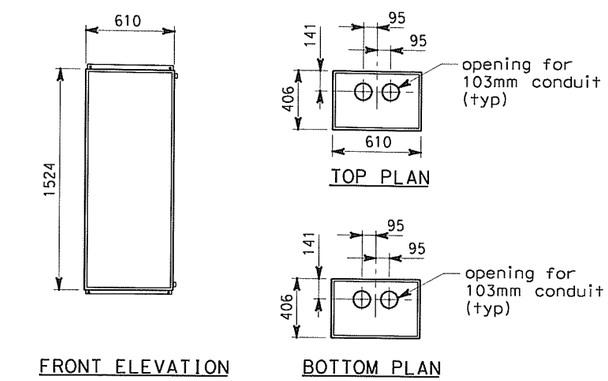

12.47 KV PULL BOX B1 (1)(2)(3)

FRONT ACCESS
SCALE 1:20

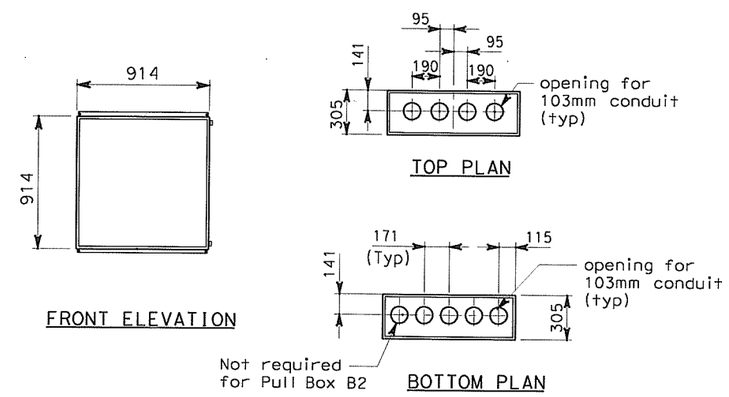

NON-CALTRANS PULL BOX B5 (1)(2)(3)

(FOR 600 V PULL BOX B2)
(FOR 600 V PULL BOX B3)
(FOR TOS/COM PULL BOX B4)
FRONT ACCESS
SCALE 1:20

DIST	COUNTY	ROUTE	KILOMETER POST TOTAL PROJECT	SHEET No	TOTAL SHEETS
04	SF	80	13.2/13.9	103 S3	1204

REGISTERED ELECTRICAL ENGINEER — DATE 2/22/08

REGISTERED PROFESSIONAL ENGINEER S. A. ESTOOLE, JR. No. E-10151 Exp. 12/31/2008 ELECTRICAL STATE OF CALIFORNIA

PLANS APPROVAL DATE

PB AMERICAS, Inc.
A Parsons Brinckerhoff Company
303 Second St., Suite 700N
San Francisco, CA 94107-1317

The State of California or its officers or agents shall not be responsible for the accuracy or completeness of electronic copies of this plan sheet.

Caltrans now has a web site! To get to the web site, go to http://www.dot.ca.gov

NOTES:

1. Pull Box shall be fabricated of Nema 4X stainless steel, type 304.
2. Provide pad lock for each pull box.
3. Provide nameplate description.

SHEET NOTES:

(1) For pull box location see drawings E-20 E-20A, E-20B and E-20F.

(2) Contractor shall verify all the dimensions prior to start work.

(3) Provide breather and drain fitting at the bottom of each pull box.

REQUEST FOR INFORMATION NOT ADDRESSED IN THIS CCO REMAIN IN FORCE

MARK	DATE	DESCRIPTIONS	BY	CH'D	CCO#
0	02/25/08	CABLE TRAY CHANGES	TW	RG SE	42S1

REVISIONS

CONTRACT CHANGE ORDER NO. _____
SHEET _____ OF _____

DETAILS
UNDERGROUND
PIER W2W PLANS AND SECTIONS

SCALE AS NOTED

E-20C

CALCULATED/ DESIGNED BY	TW	DATE 7/07	REVISED BY
CHECKED BY	EL	7/07	DATE REVISED

DESIGN OVERSIGHT: BEHZAD GOLEMOHAMMADI

STATE OF CALIFORNIA - DEPARTMENT OF TRANSPORTATION

Caltrans

THIS PLAN IS ACCURATE FOR ELECTRICAL WORK ONLY.

ALL DIMENSIONS ARE IN MILLIMETERS UNLESS OTHERWISE SHOWN.

FOR REDUCED PLANS ORIGINAL SCALE IS IN MILLIMETERS 0 20 40 60 80

DGN FILE =>T:\13103\MS\pse\SAS Struc\CCO\SAS CCO42S1\CCO 42S1 Final Submittal 2008-07-11\04-0120F1_0103S03.dgn
USERNAME =>llorico

CU 04251 EA 0120F1

LAST REVISION 00-00-00 DATE PLOTTED => 7/11/2008 TIME PLOTTED => 2:02:49 PM

DIST	COUNTY	ROUTE	KILOMETER POST TOTAL PROJECT	SHEET No	TOTAL SHEETS
04	SF	80	13.2/13.9	103 S4	1204

REGISTERED ELECTRICAL ENGINEER 2/22/08 DATE

PLANS APPROVAL DATE

REGISTERED PROFESSIONAL ENGINEER S. A. ESTOQUE, JR. No. E-10151 Exp. 12/31/2008 ELECTRICAL STATE OF CALIFORNIA

PB AMERICAS, Inc.
A Parsons Brinckerhoff Company
303 Second St., Suite 700N
San Francisco, CA 94107-1317

The State of California or its officers or agents shall not be responsible for the accuracy or completeness of electronic copies of this plan sheet.

Caltrans now has a web site! To get to the web site, go to http://www.dot.ca.gov

Caltrans Metric

SHEET NOTES:

1. For pull box sizes and opening see E-20C.
2. For pull box location see E-20.
3. Do not secure flexible conduit at this location.
4. Hardwares and conponents are for strut channels.

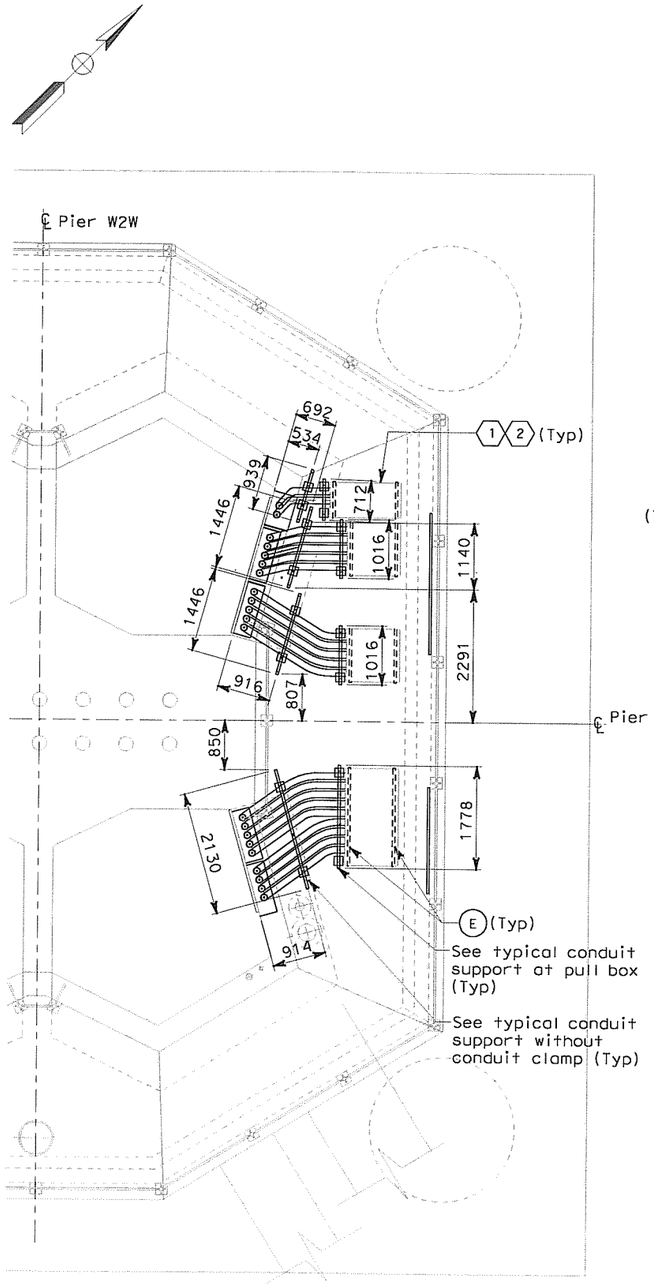

CONDUIT SUPPORT AT GRADE

PLAN AT PIER W2W
SCALE 1:50

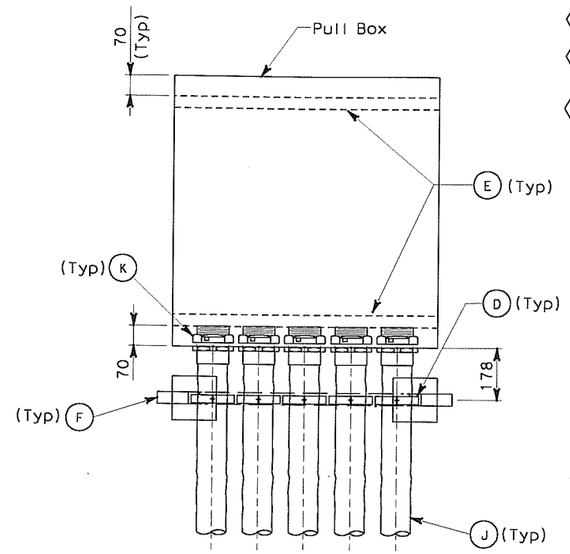

TOP VIEW

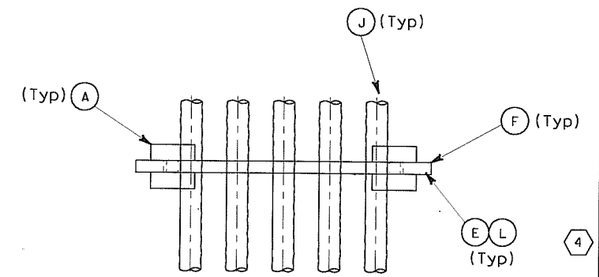

TOP VIEW

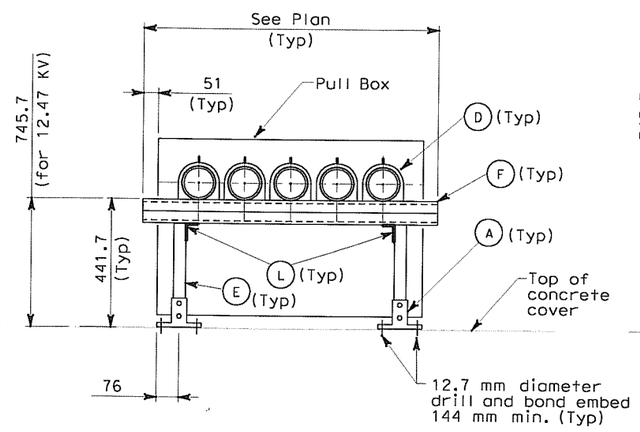

FRONT VIEW

TYPICAL CONDUIT SUPPORT AT PULL BOX

NO SCALE

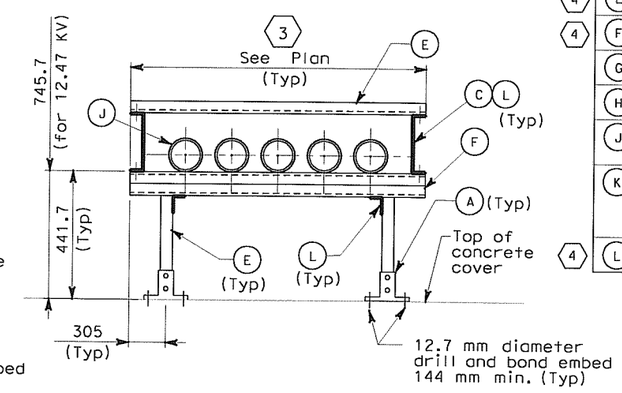

FRONT VIEW

TYPICAL CONDUIT SUPPORT WITHOUT CONDUIT CLAMP

NO SCALE

MATERIAL LIST

	Item No.	Description
4	A	Strut Post Base 152 mm x 152 mm.
	B	Not used
4	C	Strut channel spring nut, lockwasher and hex bolt (41 mm)
4	D	Strut channel conduit clamp for 103 mm
4	E	Strut channel 41 mm x 41 mm
4	F	Double strut channel 41.3 mm x 82.6 mm
	G	Not used
	H	Not used
	J	Liquidtight flexible metal conduit, 103 mm
	K	Liquidtight Insulated flexible metal conduit connector with insulated grounding bushing for 103 mm conduit
4	L	203 mm U-shape fitting

REVISED BY	DATE REVISED

CALCULATED/DESIGNED BY	TW	DATE 7/07
CHECKED BY	EJL	7/07

DESIGN OVERSIGHT
BEHZAD GOLEMOHAMMADI

STATE OF CALIFORNIA - DEPARTMENT OF TRANSPORTATION
Caltrans

THIS PLAN IS ACCURATE FOR ELECTRICAL WORK ONLY.

REQUEST FOR INFORMATION NOT ADDRESSED IN THIS CCO REMAIN IN FORCE

MARK	DATE	DESCRIPTIONS	BY	CH'D	CCO#
0	02/25/08	CABLE TRAY CHANGES	TW	RG SE	42S1

REVISIONS

CONTRACT CHANGE ORDER NO. _____
SHEET _____ OF _____

DETAILS
UNDERGROUND
PIER W2W PLANS AND SECTIONS

SCALE AS NOTED

E-20D

FOR REDUCED PLANS ORIGINAL SCALE IS IN MILLIMETERS 0 20 40 60 80

DGN FILE =>T:\13103\MS\pse\SAS Struc\CCO\SAS CCO42S1\CCO 42S1 Final Submittal 2008-07-11\04-0120F1_0103S04.dgn
USERNAME =>llorico

CU 04251 | EA 0120F1

LAST REVISION 00-00-00 | DATE PLOTTED => 7/11/2008 TIME PLOTTED => 2:03:11 PM

DIST	COUNTY	ROUTE	KILOMETER POST TOTAL PROJECT	SHEET No	TOTAL SHEETS
04	SF	80	13.2/13.9	103 S5	1204

REGISTERED ELECTRICAL ENGINEER — DATE 2/22/08

REGISTERED PROFESSIONAL ENGINEER S. A. ESTODUE, JR. No. E-10151 Exp. 12/31/2008 ELECTRICAL STATE OF CALIFORNIA

PLANS APPROVAL DATE

PB AMERICAS, Inc.
A Parsons Brinckerhoff Company
303 Second St., Suite 700N
San Francisco, CA 94107-1317

The State of California or its officers or agents shall not be responsible for the accuracy or completeness of electronic copies of this plan sheet.

Caltrans now has a web site! To get to the web site, go to http://www.dot.ca.gov

Caltrans Metric

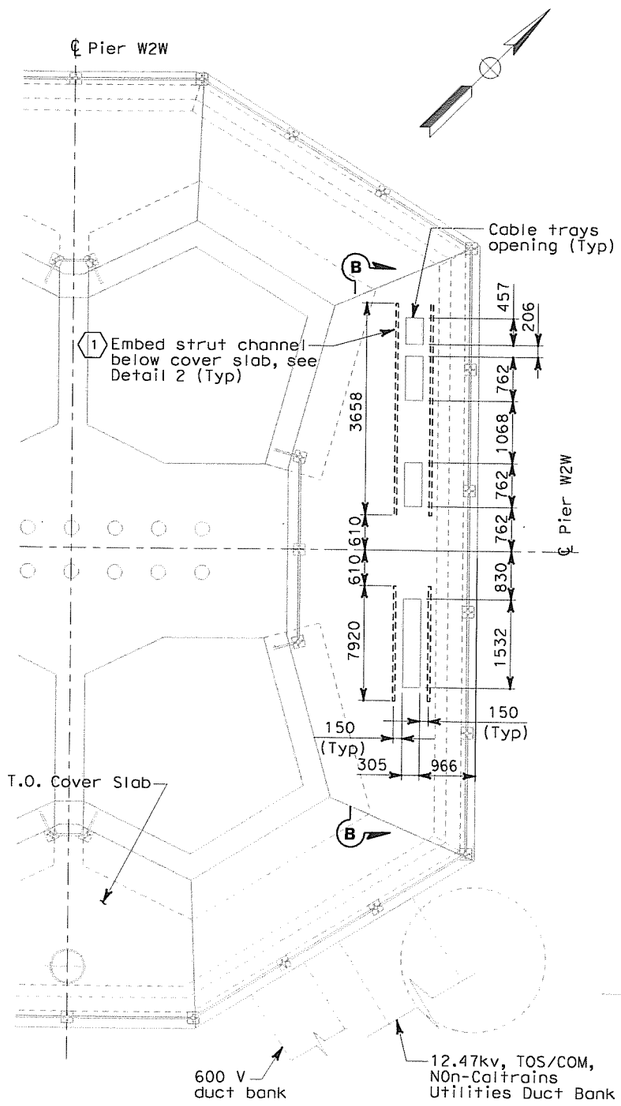

CABLE TRAY OPENING AND CONCRETE INSERT CHANNEL

PLAN AT PIER W2W
SCALE: 1:20

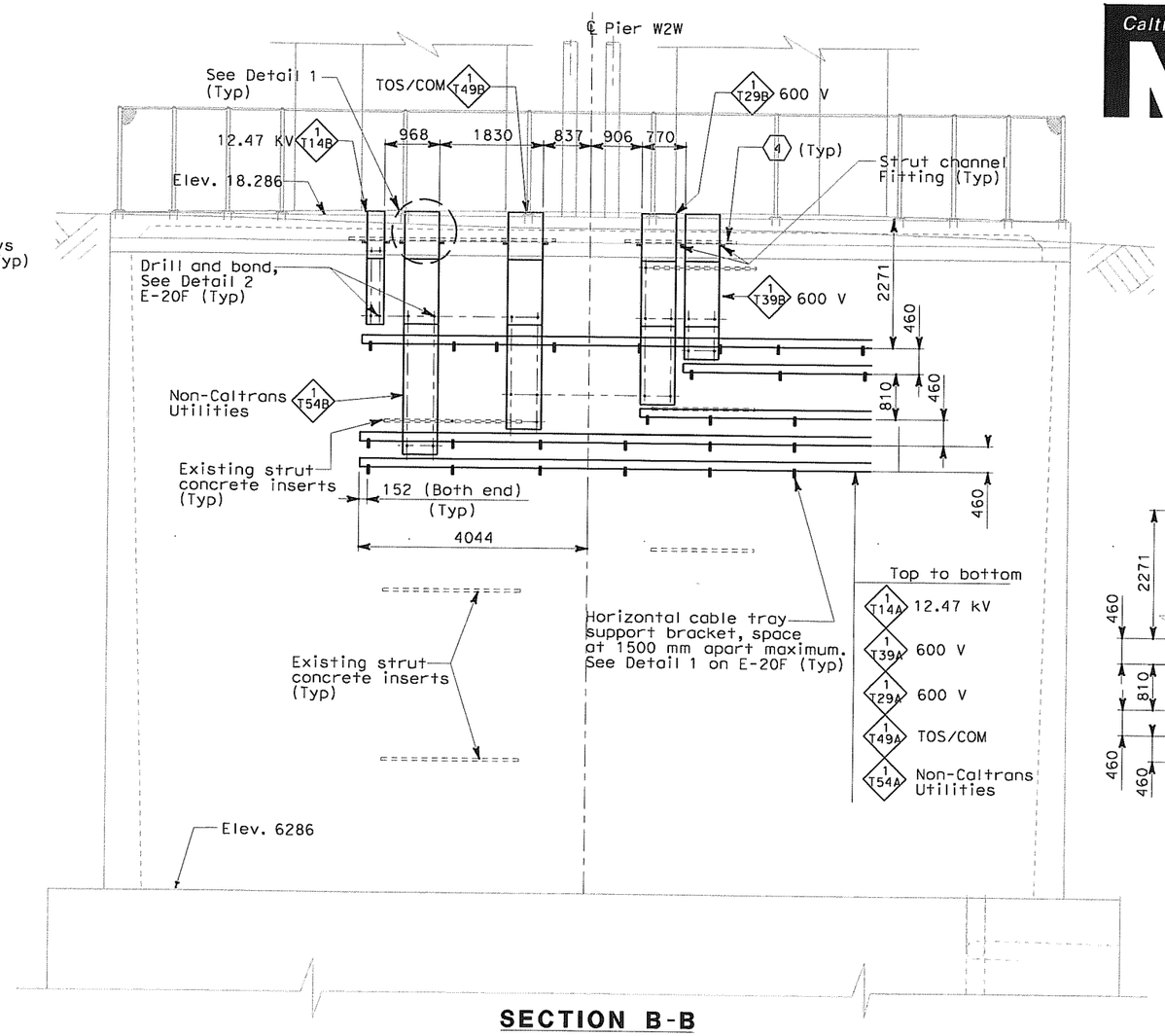

SECTION B-B

SCALE: 1:50

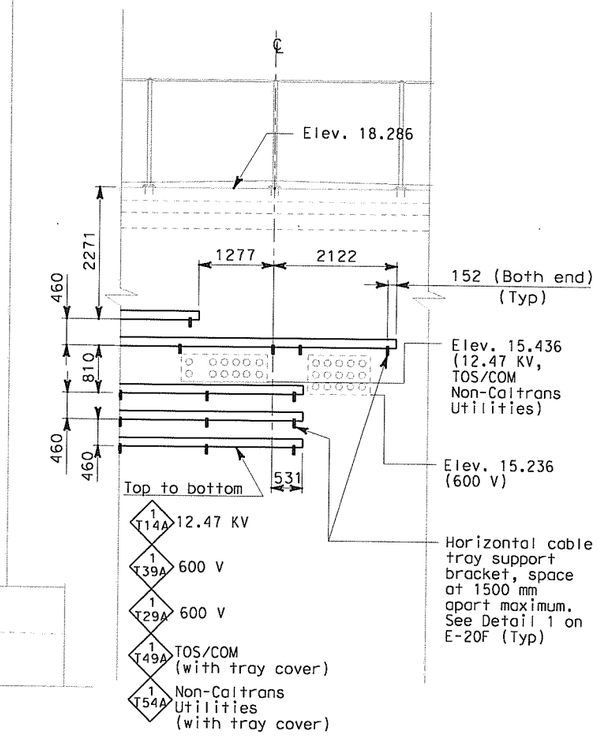

SECTION E-E (2)

SCALE: 1:50

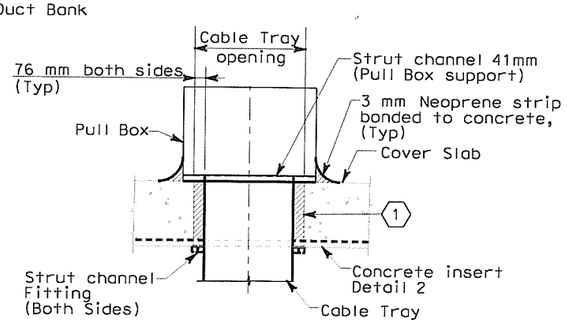

DETAIL 1

SCALE: 1:20

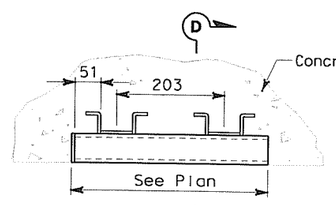

DETAIL 2 CEILING MOUNT

NO SCALE

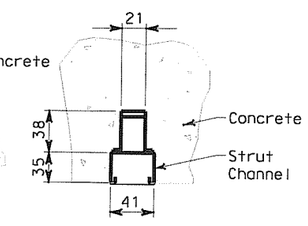

SECTION D-D

NO SCALE

REQUEST FOR INFORMATION NOT ADDRESSED IN THIS CCO REMAIN IN FORCE

MARK	DATE	DESCRIPTIONS	BY	CH'D	CCO#
0	02/25/08	CABLE TRAY CHANGES	TW	RG SE	42S1

REVISIONS

CONTRACT CHANGE ORDER NO. _____
SHEET _____ OF _____

DETAILS
UNDERGROUND
PIER W2W PLANS AND SECTIONS

SCALE AS NOTED

SHEET NOTES:

1. For fill-in material between cable tray and concrete, See Structures.
2. Section E-E see sheet E-20.

THIS PLAN IS ACCURATE FOR ELECTRICAL WORK ONLY.

ALL DIMENSIONS ARE IN MILLIMETERS UNLESS OTHERWISE SHOWN.

FOR REDUCED PLANS ORIGINAL SCALE IS IN MILLIMETERS 0 20 40 60 80

DGN FILE =>T:\13103\MS\pse\SAS Struc\CCO\SAS CCO42S1\CCO 42S1 Final Submittal 2008-07-11\04-0120f1_0103S05.dgn
USERNAME =>llorico

CU 04251 EA 0120F1

E-20E

DESIGN OVERSIGHT	CALCULATED/DESIGNED BY	CHECKED BY	REVISED BY	DATE REVISED
BEHZAD GOLEMOHAMMADI	TW	EJL	DATE 07/07	07/07

STATE OF CALIFORNIA - DEPARTMENT OF TRANSPORTATION
Caltrans

LAST REVISION 00-00-00
DATE PLOTTED => 7/11/2008
TIME PLOTTED => 2:03:29 PM

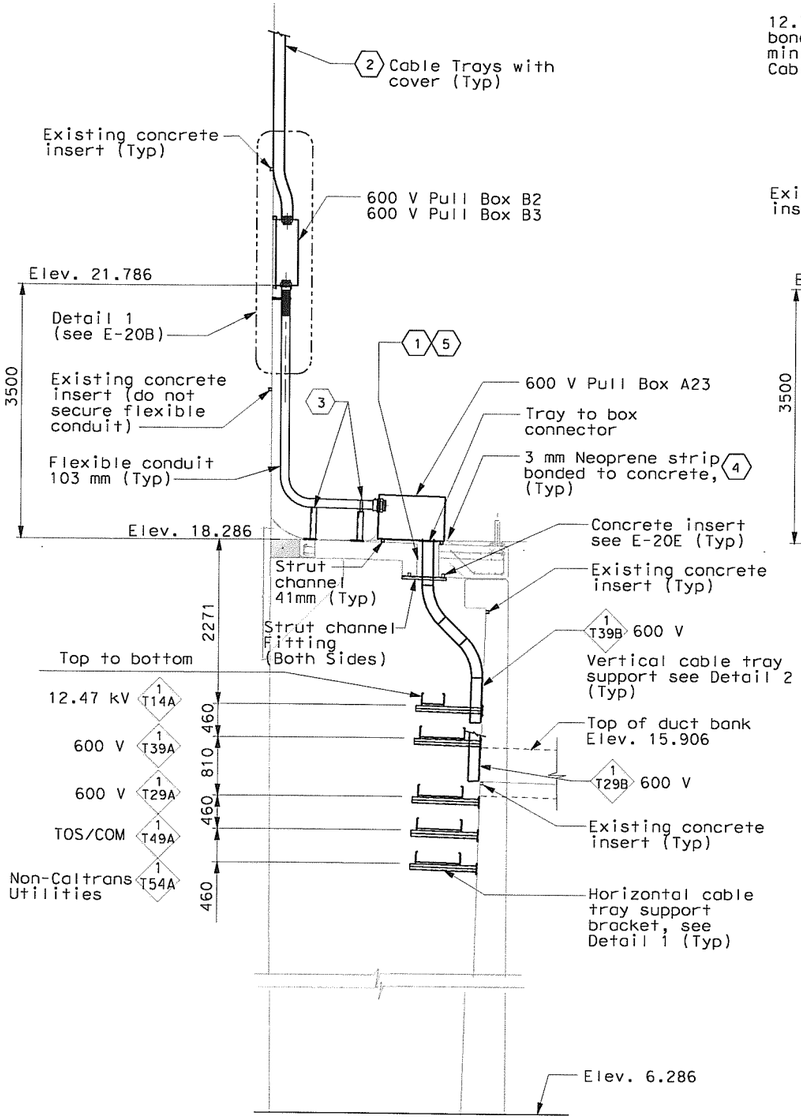

SECTION C-C 6

SCALE: 1:20

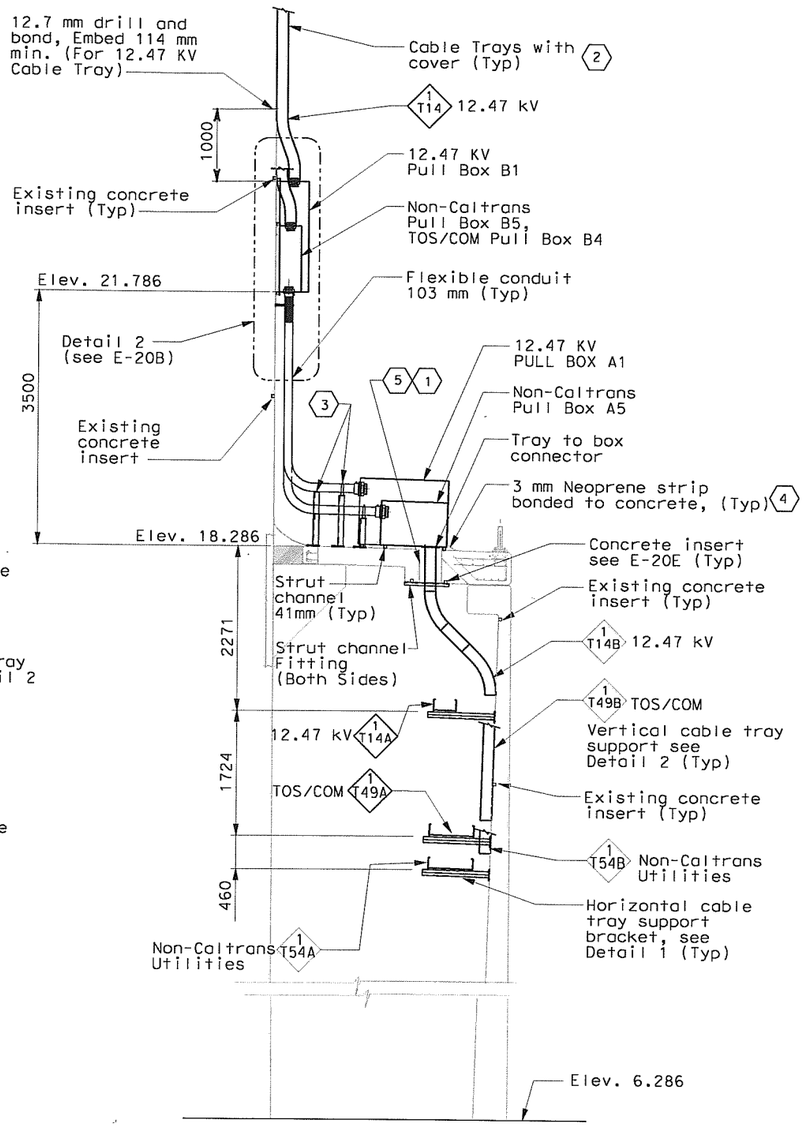

SECTION D-D 6

SCALE: 1:20

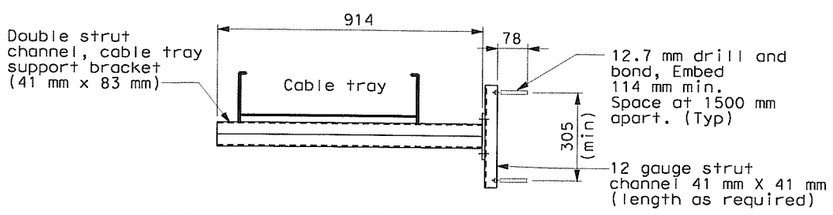

HORIZONTAL CABLE TRAY SUPPORT BRACKET

DETAIL 1

NO SCALE

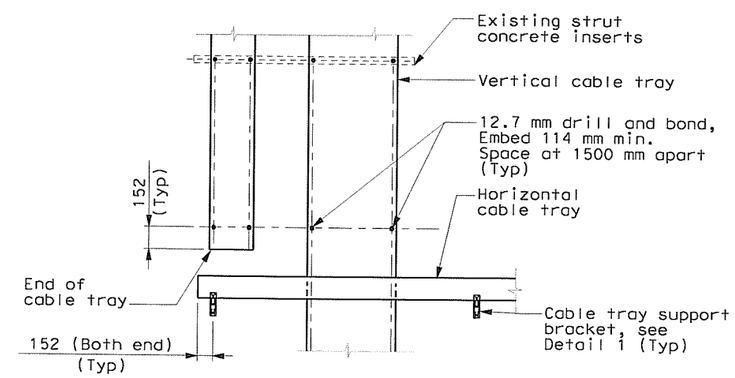

VERTICAL CABLE TRAY SUPPORT

DETAIL 2

NO SCALE

REQUEST FOR INFORMATION NOT ADDRESSED IN THIS CCO REMAIN IN FORCE					
0	02/25/08	CABLE TRAY CHANGES	RG	SE	42S1
MARK	DATE	DESCRIPTIONS	BY	CH'D	CCO#
		REVISIONS			

CONTRACT CHANGE ORDER NO. _____
SHEET _____ OF _____

Caltrans Metric

DIST	COUNTY	ROUTE	KILOMETER POST TOTAL PROJECT	SHEET No	TOTAL SHEETS
04	SF	80	13.2/13.9	103 S6	1204

REGISTERED ELECTRICAL ENGINEER — 2/22/08 DATE

REGISTERED PROFESSIONAL ENGINEER S. A. ESTOQUE, JR. No. E-10151 Exp. 12/31/2008 ELECTRICAL STATE OF CALIFORNIA

PLANS APPROVAL DATE

PB AMERICAS, Inc.
A Parsons Brinckerhoff Company
303 Second St., Suite 700N
San Francisco, CA 94107-1317

The State of California or its officers or agents shall not be responsible for the accuracy or completeness of electronic copies of this plan sheet.

Caltrans now has a web site! To get to the web site, go to http://www.dot.ca.gov

NOTES:

1. References:
   - For duct bank and manhole plan, see sheet E-11.
   - For duct bank section, see sheet E-19.
   - For circuit and conduit/cable tray schedules, see sheets starting at E-401.
   - For foundation grounding, see sheet E-22.
   - For grounding interface, see sheet E-18.
   - For duct bank elevations at W2W, see sheet E-23.

SHEET NOTES:

1. For fill-in material between cable tray and concrete, see Structures.
2. For continuation see E-128.
3. For conduit support see E-20D.
4. The contractor to provide water tight seal after cables are pulled.
5. For embed strut channel and cable tray opening location at pier W2 cover slab see E-20E.
6. Section C-C and Section D-D see sheet E-20.

DETAILS
UNDERGROUND
PIER W2W SECTIONS AND DETAIL

SCALE AS NOTED

E-20F

DATE	REVISED BY	DATE REVISED
7/07	EJL	07/07

CALCULATED/DESIGNED BY: TW
CHECKED BY: EJL

DESIGN OVERSIGHT: BEHZAD GOLEMOHAMMADI

STATE OF CALIFORNIA - DEPARTMENT OF TRANSPORTATION
Caltrans

ALL DIMENSIONS ARE IN MILLIMETERS UNLESS OTHERWISE SHOWN.

FOR REDUCED PLANS ORIGINAL SCALE IS IN MILLIMETERS 0 20 40 60 80

DGN FILE =>T:\13103\MS\pse\SAS Struc\CCO\SAS CCO42S1\04-0120f1_0103S06.dgn
USERNAME =>llorico

CU 04251 EA 0120F1

LAST REVISION 00-00-00
DATE PLOTTED => 7/11/2008
TIME PLOTTED => 2:05:26 PM

DIST	COUNTY	ROUTE	KILOMETER POST TOTAL PROJECT	SHEET NO	TOTAL SHEETS
04	SF	80	13.2/13.9	104 R1	1204

REGISTERED ELECTRICAL ENGINEER 12/19/02 DATE

12-6-04
PLANS APPROVAL DATE

REGISTERED PROFESSIONAL ENGINEER JENS ERLINGSSON No. 8249 Exp. 9/30/06 ELECTRICAL STATE OF CALIFORNIA

PB POWER, Inc.
A Parsons Brinckerhoff Company
303 Second St., Suite 700N
San Francisco, CA 94107-1317

The State of California or its officers or agents shall not be responsible for the accuracy or completeness of electronic copies of this plan sheet.

Caltrans now has a web site! To get to the web site, go to http://www.dot.ca.gov

Caltrans Metric

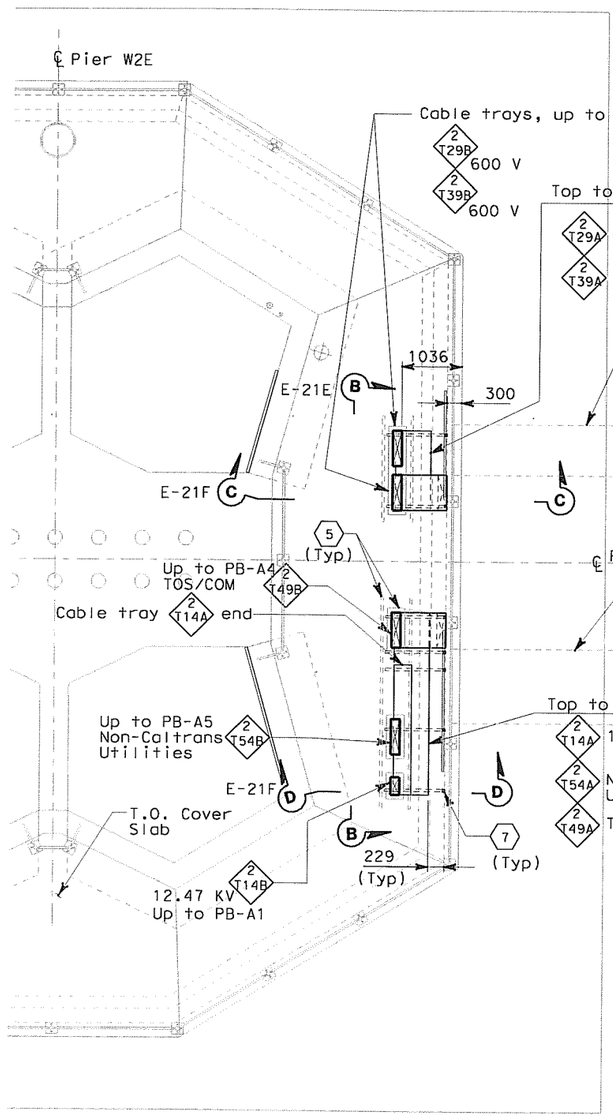

PLAN AT BELOW COVER PIER W2E

SCALE: 1:20

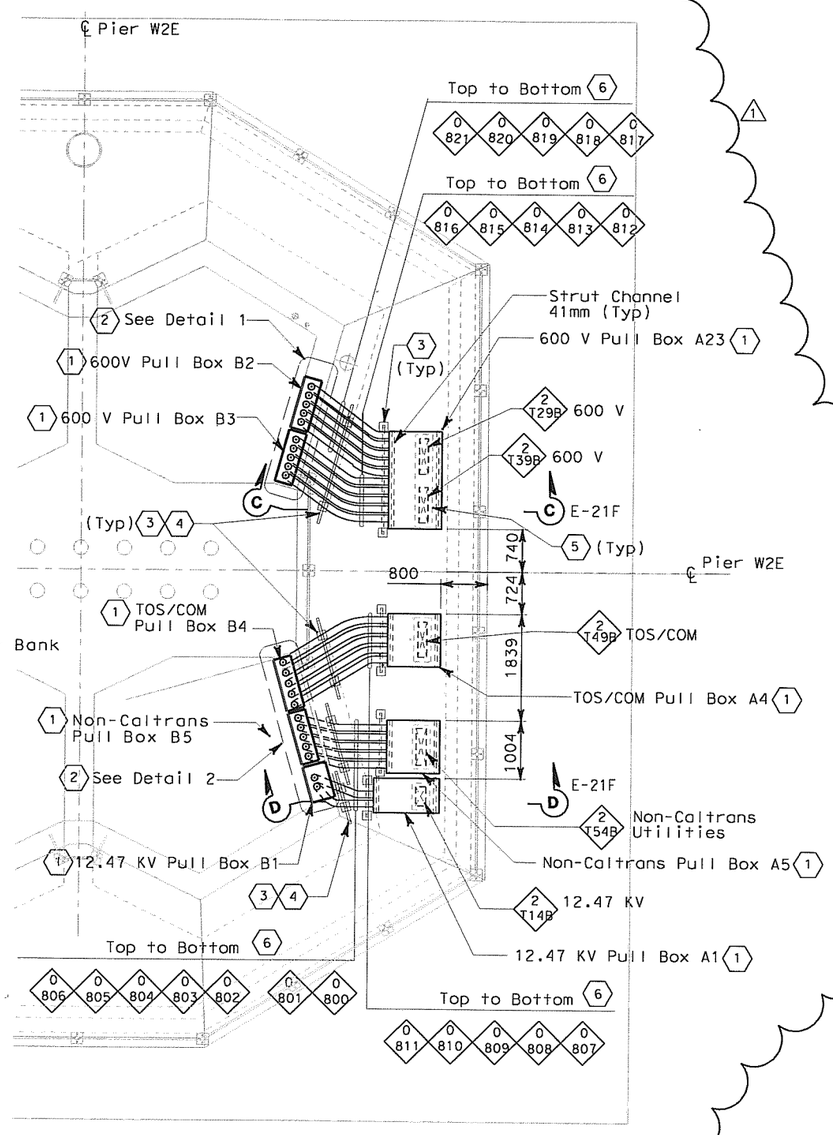

PLAN AT GRADE PIER W2E

SCALE: 1:20

NOTES:

1. References:
   - For duct banks and manholes, see sheet E-11.
   - For duct bank sections, see sheet E-19.
   - For circuit and conduit/cable tray schedules, see sheets starting at E-401.
   - For grounding interface, see sheet E-18.
   - For foundation grounding, see sheet E-22.
   - For SAS Superstructure girder eastbound grounding plan, see sheets E-196 and E-18.
   - For duct banks elevations at W2E, see sheet E-23.

SHEET NOTES:

(1) For pull box sizes, opening and type see sheet E-21C.

(2) For Details 1 and 2, see sheet E-21B.

(3) For conduit support details, see E-21D.

(4) Do not secure liquidtight metal flexible conduit at this support location.

(5) For embed strut channel and cable tray opening location at pier W2 cover slab see E-21E.

(6) Length of flexible conduits shall be provided for seismic movement. The maximum expansion displacement is 400 mm.

(7) Cable tray support bracket, see Detail 1, Sheet E-21F.

REGISTERED PROFESSIONAL ENGINEER S. A. ESTOQUE, JR. No. E-10151 Exp. 12/31/2008 ELECTRICAL STATE OF CALIFORNIA

FOR REVISION ONLY

REQUEST FOR INFORMATION NOT ADDRESSED IN THIS CCO REMAIN IN FORCE

MARK	DATE	DESCRIPTIONS	BY	CH'D	CCO#
1	02/25/08	CABLE TRAY CHANGES	TW	RG SE	42S1

REVISIONS

CONTRACT CHANGE ORDER NO. _____
SHEET ____ OF ____

DETAILS
UNDERGROUND
PIER W2E PLANS AND SECTIONS

SCALE AS NOTED

E-21

CALCULATED/ DESIGNED BY	FK	DATE 07/07	REVISED BY
CHECKED BY	IAH	07/07	DATE REVISED

DESIGN OVERSIGHT
BEHZAD GOLEMOHAMMADI

STATE OF CALIFORNIA - DEPARTMENT OF TRANSPORTATION
Caltrans

THIS PLAN IS ACCURATE FOR ELECTRICAL WORK ONLY.

ALL DIMENSIONS ARE IN MILLIMETERS UNLESS OTHERWISE SHOWN.

FOR REDUCED PLANS ORIGINAL SCALE IS IN MILLIMETERS 0 20 40 60 80

DGN FILE =>T:\13103\MS\pse\SAS Struc\CCO\SAS CCO42S1\04-0120f1_0104R01.dgn
USERNAME =>llorico

CU 04251 | EA 0120F1

LAST REVISION 00-00-00
DATE PLOTTED => 7/11/2008
TIME PLOTTED => 2:05:47 PM

DIST	COUNTY	ROUTE	KILOMETER POST TOTAL PROJECT	SHEET No	TOTAL SHEETS
04	SF	80	13.2/13.9	104 S1	1204

REGISTERED ELECTRICAL ENGINEER 2/22/08 DATE

PLANS APPROVAL DATE

PB AMERICAS, Inc.
A Parsons Brinckerhoff Company
303 Second St., Suite 700N
San Francisco, CA 94107-1317

REGISTERED PROFESSIONAL ENGINEER S. A. ESTOQUE, JR. No. E-10151 Exp. 12/31/2008 ELECTRICAL STATE OF CALIFORNIA

The State of California or its officers or agents shall not be responsible for the accuracy or completeness of electronic copies of this plan sheet.

Caltrans now has a web site! To get to the web site, go to http://www.dot.ca.gov

Caltrans Metric

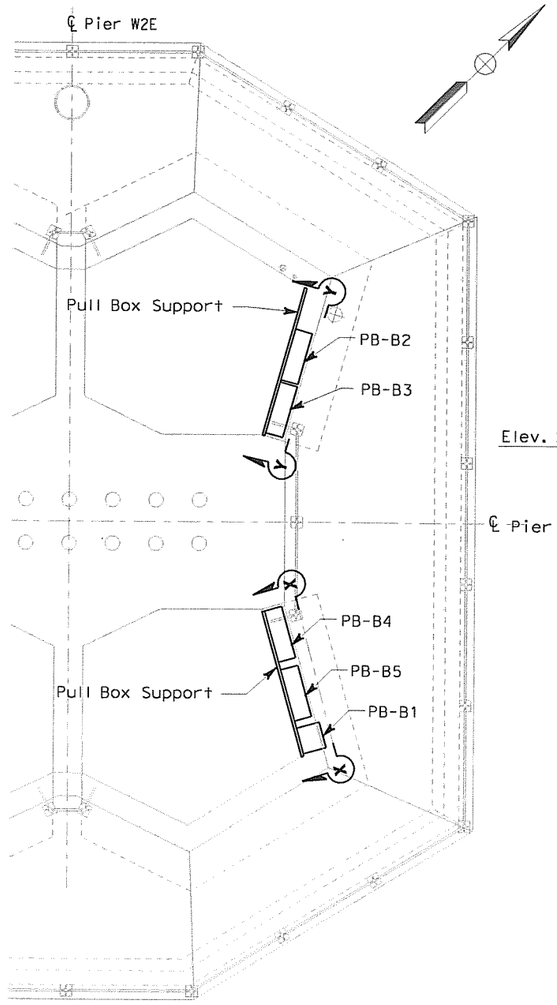

PLAN AT PIER W2E

PULL BOX MOUNTING AT FACE OF COLUMN
SCALE 1:20

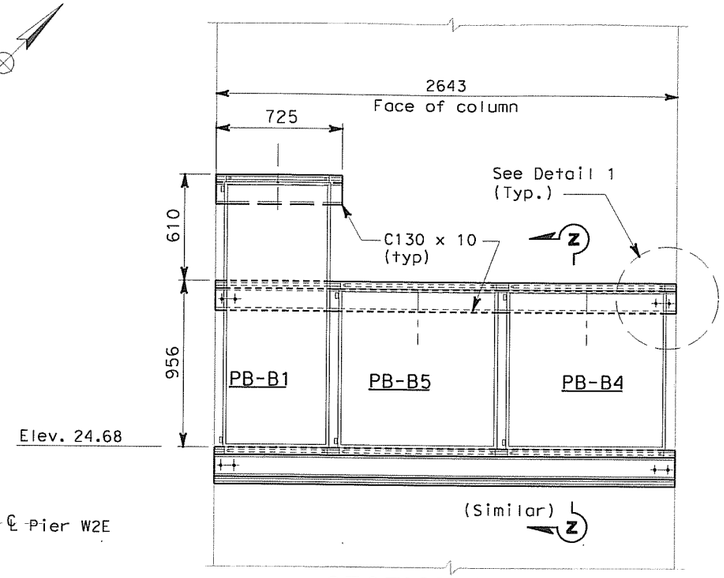

SECTION X-X (1)

PULL BOX SUPPORT
NO SCALE

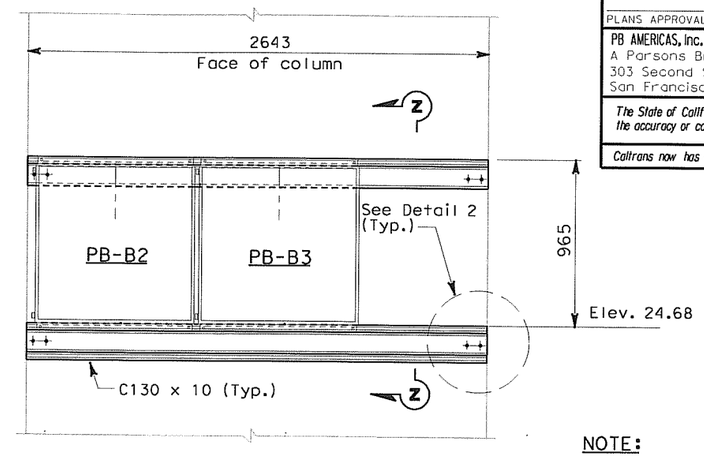

SECTION Y-Y (1)

PULL BOX SUPPORT
NO SCALE

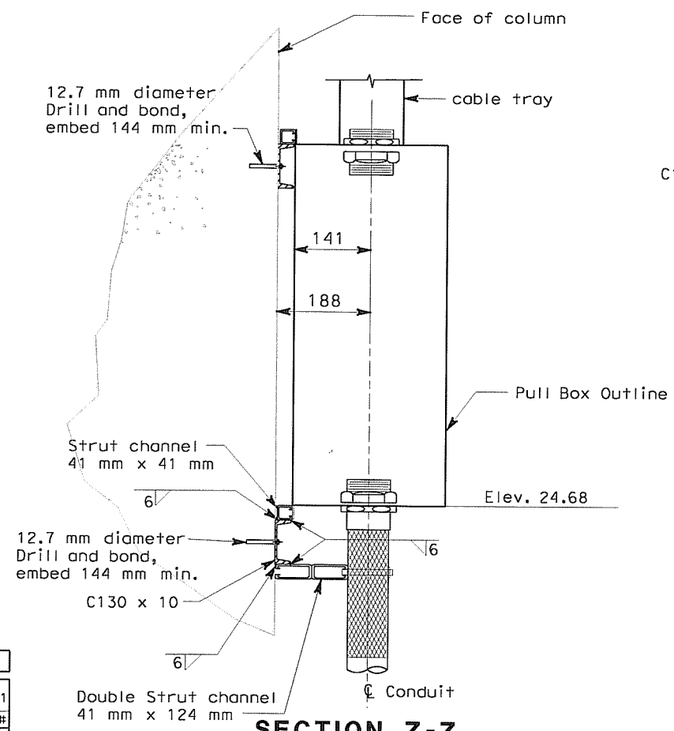

SECTION Z-Z

NO SCALE

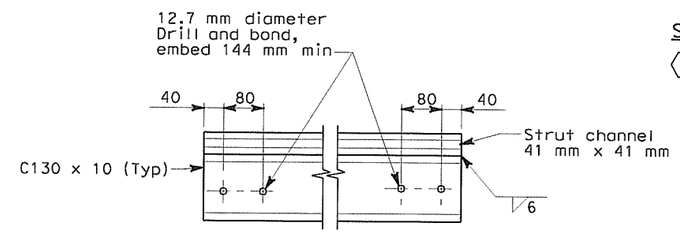

DETAIL 1

NO SCALE

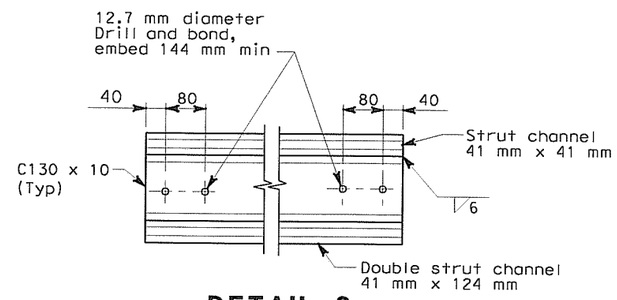

DETAIL 2

NO SCALE

NOTE:

1. Contractor shall verify all dimensions prior to start of work.

SHEET NOTE:

(1) For pull box sizes, location, opening and type, see E-21, E-21B, E-21C, and E-21D.

REQUEST FOR INFORMATION NOT ADDRESSED IN THIS CCO REMAIN IN FORCE					
0	02/25/08	CABLE TRAY CHANGES	TW	RG SE	42S1
MARK	DATE	DESCRIPTIONS	BY	CH'D	CCO#
REVISIONS					

CONTRACT CHANGE ORDER NO. _____
SHEET _____ OF _____

DETAILS
UNDERGROUND
PIER W2E PLANS AND SECTIONS

SCALE AS NOTED

STATE OF CALIFORNIA - DEPARTMENT OF TRANSPORTATION
Caltrans

DESIGN OVERSIGHT: BEHZAD GOLEMOHAMMADI

CALCULATED/ DESIGNED BY	TW	DATE 7/07	REVISED BY
CHECKED BY	EJL	7/07	DATE REVISED

THIS PLAN ACCURATE FOR ELECTRICAL WORK ONLY.

ALL DIMENSIONS ARE IN MILLIMETERS UNLESS OTHERWISE SHOWN.

FOR REDUCED PLANS ORIGINAL SCALE IS IN MILLIMETERS 0 20 40 60 80

DGN FILE =>T:\13103\MS\pse\SAS Struc\CCO\SAS CCO42S1\04-0120f1_0104S01.dgn
USERNAME =>llorico

CU 04251 EA 0120F1

E-21A

LAST REVISION 00-00-00
DATE PLOTTED => 7/11/2008
TIME PLOTTED => 2:06:20 PM

DIST	COUNTY	ROUTE	KILOMETER POST TOTAL PROJECT	SHEET No.	TOTAL SHEETS
04	SF	80	13.2/13.9	104 S2	1204

REGISTERED ELECTRICAL ENGINEER 2/22/08 DATE

PLANS APPROVAL DATE

REGISTERED PROFESSIONAL ENGINEER S. A. ESTOQUE, JR. No. E-10151 Exp. 12/31/2008 ELECTRICAL STATE OF CALIFORNIA

PB AMERICAS, Inc.
A Parsons Brinckerhoff Company
303 Second St., Suite 700N
San Francisco, CA 94107-1317

The State of California or its officers or agents shall not be responsible for the accuracy or completeness of electronic copies of this plan sheet.

Caltrans now has a web site! To get to the web site, go to http://www.dot.ca.gov

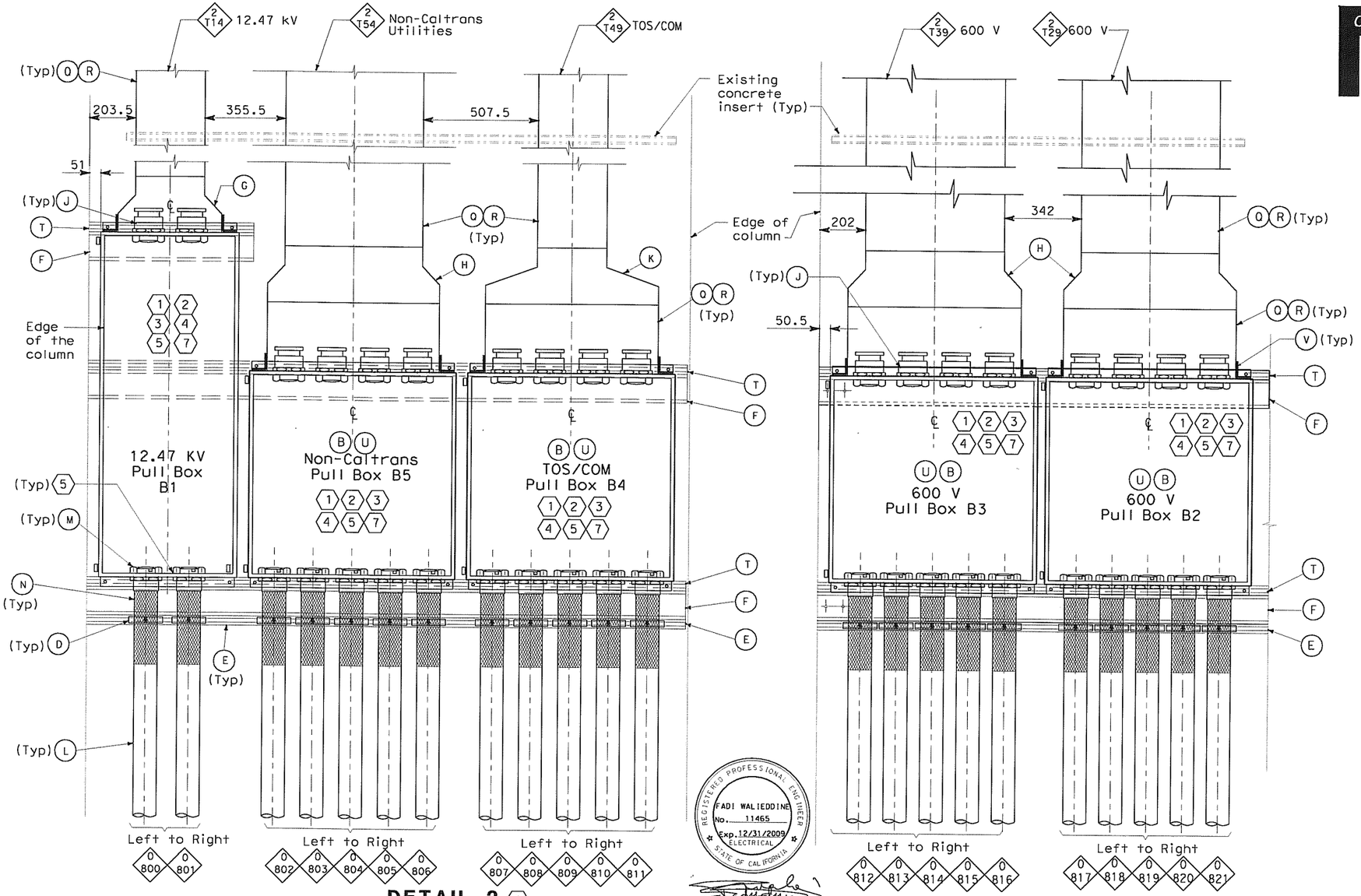

DETAIL 2 (6)
NO SCALE

DETAIL 1 (6)
NO SCALE

REGISTERED PROFESSIONAL ENGINEER FADI WALIEDDINE No. 11465 Exp. 12/31/2009 ELECTRICAL STATE OF CALIFORNIA

FOR REVISION ONLY

MATERIAL LIST

Item No.	Description
A	Pull Box, Nema 4X 1524 mm x 610 mm x 406 mm
B	Pull Box, Nema 4X 914 mm x 914 mm x 305 mm
C	Not used
D	Strut channel conduit clamp for 103 mm
E	Double strut channel 41 mm x 124 mm
F	Channel C130x10
G	Cable tray straight reducer (547 mm to 305 mm)
H	Cable tray straight reducer (762 mm to 610 mm)
J	103 mm conduit hub, 53 mm long nipple and insulated bushing
K	Cable tray straight reducer (762 mm to 305 mm)
L	Liquidtight flexible metal conduit, 103 mm
M	Liquidtight Insulated flexible metal conduit connector with insulated grounding bushing lug for 103mm conduit
N	Strain relief grips for flexible conduit, 103 mm
P	Not used
Q	Cable tray, ladder type
R	Cable tray peaked cover and cover clamp
T	Strut channel 41 mm x 41 mm
U	Breather and Drain Hole
V	Tray to box connector plates

NOTE:

1. All cable/cables entering the liquidtight conduits from the pull box shall be provided with strain relief cable/cables grips attached from inside the pull box.

SHEET NOTES:

(1) For Pull Boxes location see E-21.

(2) For Pull Box sizes and opening see E-21C.

(3) For Pull Box mounting and support see E-21A.

(4) Contractor shall verify all the dimensions prior to start the work.

(5) To prevent moisture and water from entering enclosures, Contractor to provide sealant after all cables are pulled. Conduit and nipples without cables shall be capped for future use.

(6) Detail 1 and Detail 2 see sheet E-21.

(7) All liquidtight flexible metallic conduit shall have integral continuous copper ground whether shown on the drawings or not. Bond conduit bushings together and to the metallic enclosures

REQUEST FOR INFORMATION NOT ADDRESSED IN THIS CCO REMAIN IN FORCE

MARK	DATE	DESCRIPTIONS	BY	CH'D	CCO#
0	02/25/08	CABLE TRAY CHANGES	TW	RG SE	42S1

REVISIONS

CONTRACT CHANGE ORDER NO. _____
SHEET _____ OF _____

DETAILS
UNDERGROUND
PIER W2E PLANS AND SECTIONS
SCALE AS NOTED

E-21B

REVISED BY	DATE REVISED

CALCULATED/DESIGNED BY	TW	DATE 7/07
CHECKED BY	EJL	7/07

DESIGN OVERSIGHT: BEHZAD GOLEMOHAMMADI

STATE OF CALIFORNIA - DEPARTMENT OF TRANSPORTATION

Caltrans

THIS PLAN IS ACCURATE FOR ELECTRICAL WORK ONLY.

ALL DIMENSIONS ARE IN MILLIMETERS UNLESS OTHERWISE SHOWN.

FOR REDUCED PLANS ORIGINAL SCALE IS IN MILLIMETERS 0 20 40 60 80

DGN FILE =>T:\13103\MS\pse\SAS Struc\CCO\SAS CCO42S1\CCO 42S1 Final Submittal 2008-07-11\04-0120f1_0104S02.dgn
USERNAME =>garciar

CU 04251 | EA 0120F1

LAST REVISION 00-00-00 | DATE PLOTTED => 8/5/2008 TIME PLOTTED => 10:43:25 AM

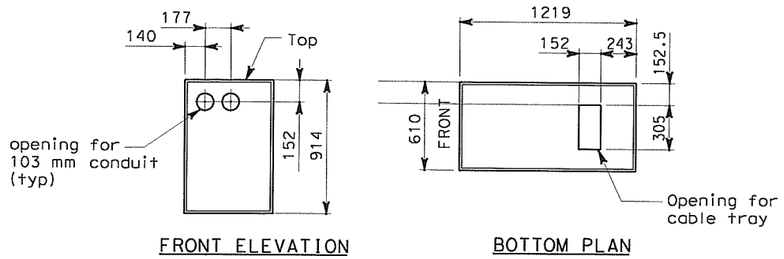

12.47 KV PULL BOX A1 (1)(2)(3)

TOP ACCESS
SCALE 1:20

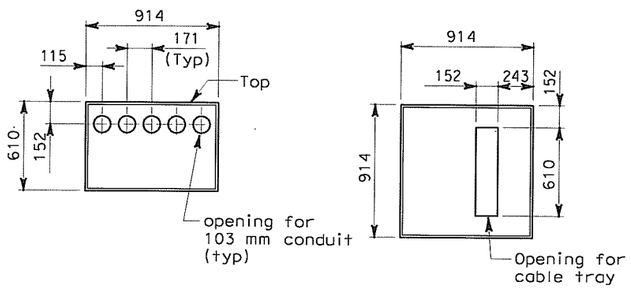

NON-CALTRANS PULL BOX A5 (1)(2)(3)

(FOR TOS/COM PULL BOX A4)
TOP ACCESS
SCALE 1:20

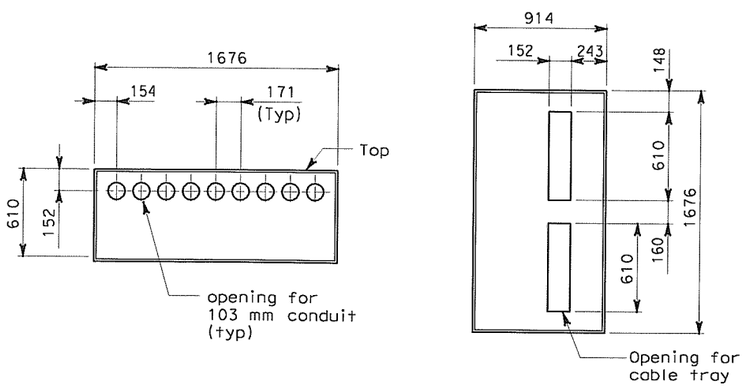

600 PULL BOX A23 (1)(2)(3)

TOP ACCESS
SCALE 1:20

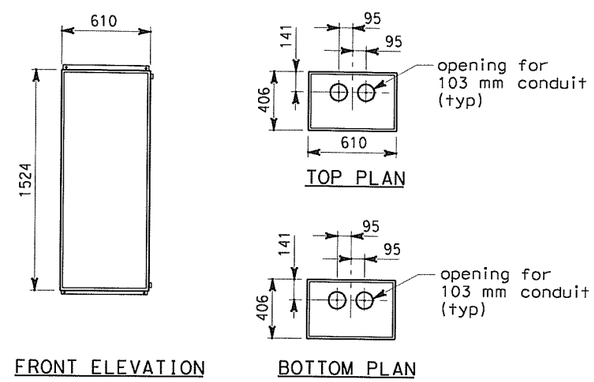

12.47 KV PULL BOX B1 (1)(2)(3)

FRONT ACCESS
SCALE 1:20

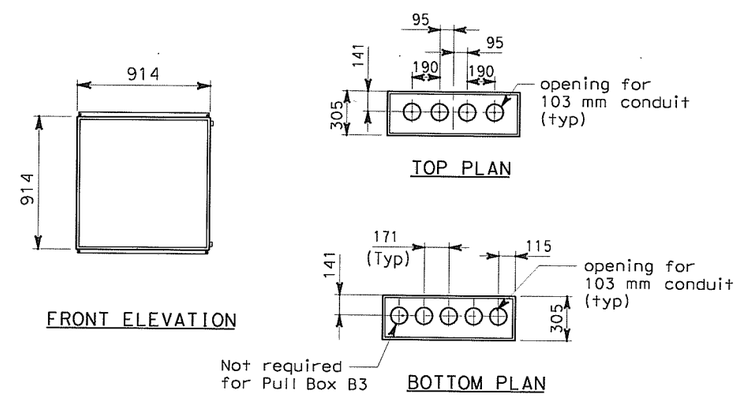

NON-CALTRANS PULL BOX B5 (1)(2)(3)

(FOR 600 V PULL BOX B2)
(FOR 600 V PULL BOX B3)
(FOR TOS/COM PULL BOX B4)
FRONT ACCESS
SCALE 1:20

Caltrans Metric

DIST	COUNTY	ROUTE	KILOMETER POST TOTAL PROJECT	SHEET NO	TOTAL SHEETS
04	SF	80	13.2/13.9	104 S3	1204

REGISTERED ELECTRICAL ENGINEER — DATE 2/22/08

REGISTERED PROFESSIONAL ENGINEER S. A. ESTOQUE, JR. No. E-10151 Exp. 12/31/2008 ELECTRICAL STATE OF CALIFORNIA

PLANS APPROVAL DATE

PB AMERICAS, Inc.
A Parsons Brinckerhoff Company
303 Second St., Suite 700N
San Francisco, CA 94107-1317

The State of California or its officers or agents shall not be responsible for the accuracy or completeness of electronic copies of this plan sheet.

Caltrans now has a web site! To get to the web site, go to http://www.dot.ca.gov

NOTES:

1. Pull Box shall be fabricated of Nema 4X stainless steel, type 304.
2. Provide pad lock for each pull box.
3. Provide nameplate description.

SHEET NOTES:

(1) For pull box location see drawings E-21, E-21A, E-21B & E-21F.

(2) Contractor shall verify all the dimensions prior to start work.

(3) Provide breather and drain fitting at the bottom of each pull box.

REQUEST FOR INFORMATION NOT ADDRESSED IN THIS CCO REMAIN IN FORCE

MARK	DATE	DESCRIPTIONS	BY	CH'D	CCO#
0	02/25/08	CABLE TRAY CHANGES	TW	RC SE	42S1

REVISIONS

CONTRACT CHANGE ORDER NO. _____
SHEET _____ OF _____

DETAILS
UNDERGROUND
PIER W2E PLANS AND SECTIONS

SCALE AS NOTED

E-21C

CALCULATED/ DESIGNED BY	TW	DATE 7/07	REVISED BY	DATE REVISED
CHECKED BY	EL	7/07		

DESIGN OVERSIGHT: BEHZAD GOLEMOHAMMADI

STATE OF CALIFORNIA - DEPARTMENT OF TRANSPORTATION
Caltrans

THIS PLAN IS ACCURATE FOR ELECTRICAL WORK ONLY.

ALL DIMENSIONS ARE IN MILLIMETERS UNLESS OTHERWISE SHOWN.

FOR REDUCED PLANS ORIGINAL SCALE IS IN MILLIMETERS 0 20 40 60 80

DGN FILE =>T:\13103\MS\pse\SAS Struc\CCO\SAS CCO4251\04-0120f1_0104S03.dgn
USERNAME =>llorico

CU 04251 EA 0120F1

LAST REVISION 00-00-00 DATE PLOTTED => 7/11/2008 TIME PLOTTED => 2:06:57 PM

DIST	COUNTY	ROUTE	KILOMETER POST TOTAL PROJECT	SHEET No	TOTAL SHEETS
04	SF	80	13.2/13.9	104 S4	1204

REGISTERED ELECTRICAL ENGINEER 2/22/08 DATE

PLANS APPROVAL DATE

REGISTERED PROFESSIONAL ENGINEER S. A. ESTOQUE, JR No. E-10151 Exp. 12/31/2008 ELECTRICAL STATE OF CALIFORNIA

PB AMERICAS, Inc.
A Parsons Brinckerhoff Company
303 Second St., Suite 700N
San Francisco, CA 94107-1317

The State of California or its officers or agents shall not be responsible for the accuracy or completeness of electronic copies of this plan sheet.

Caltrans now has a web site! To get to the web site, go to http://www.dot.ca.gov

Caltrans Metric

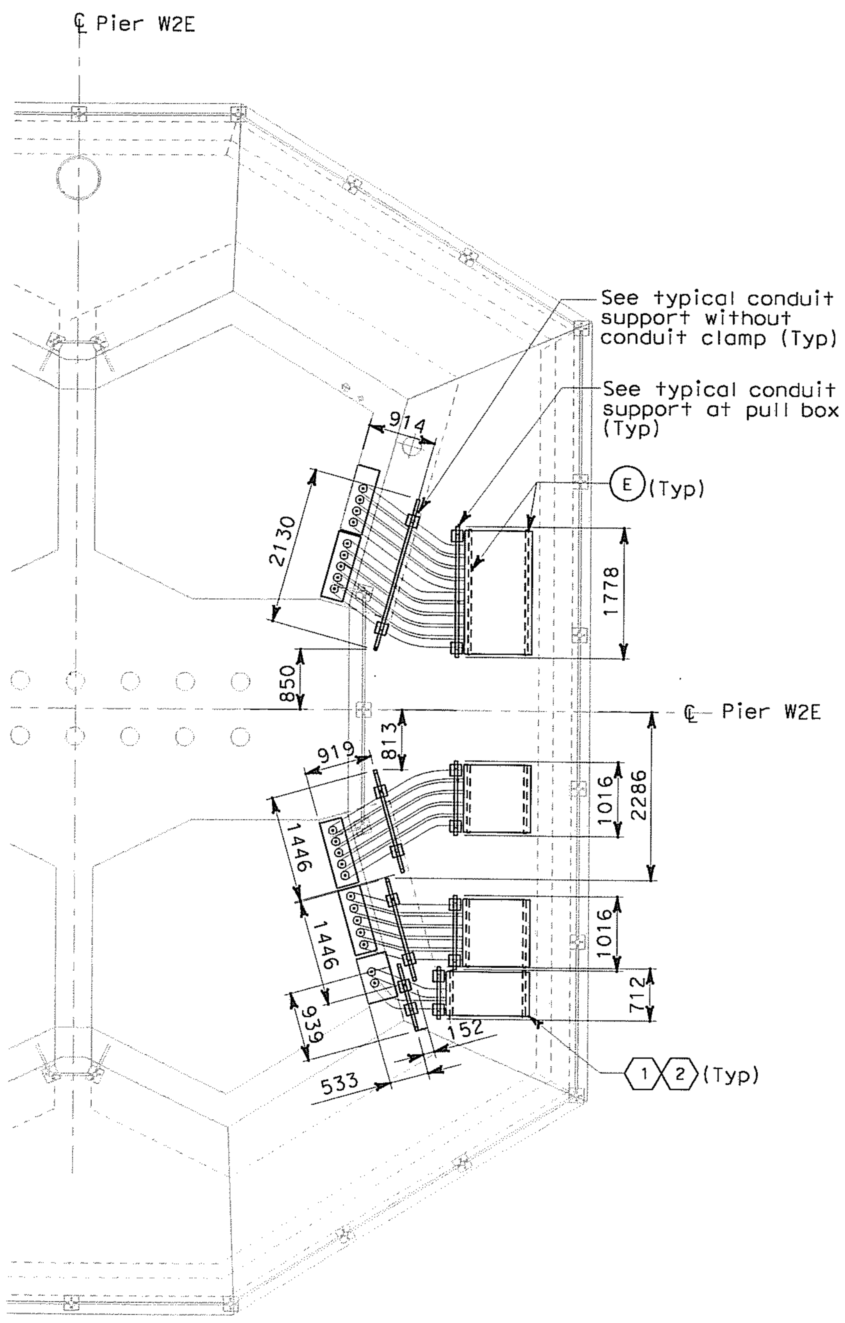

CONDUIT SUPPORT AT GRADE

PLAN AT PIER W2E
SCALE 1:50

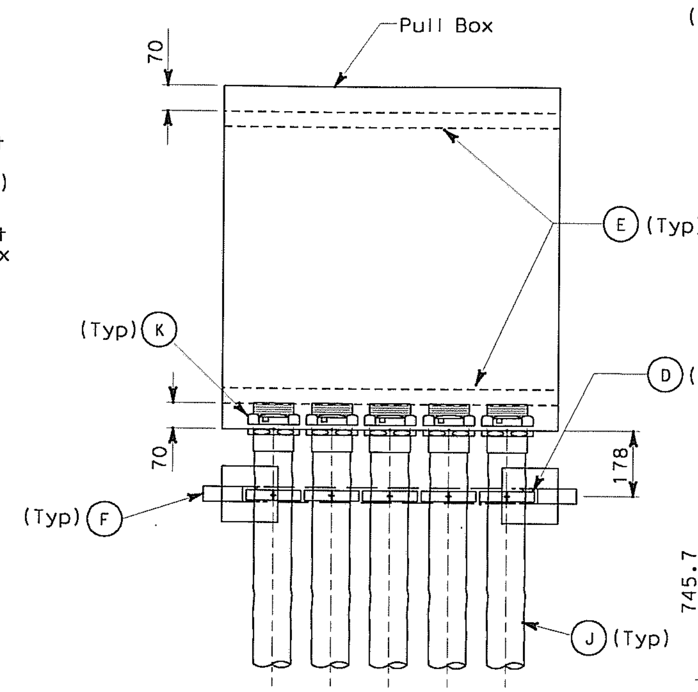

TOP VIEW

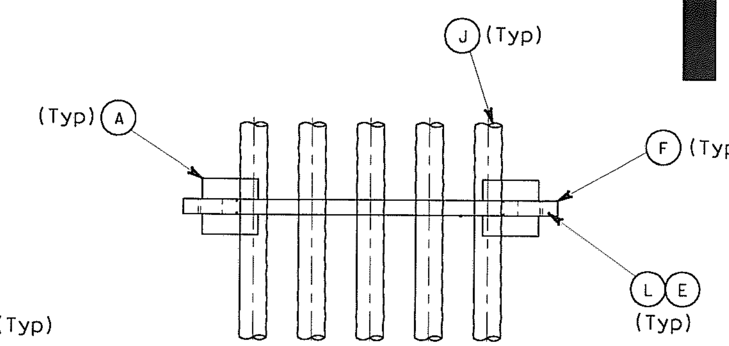

TOP VIEW

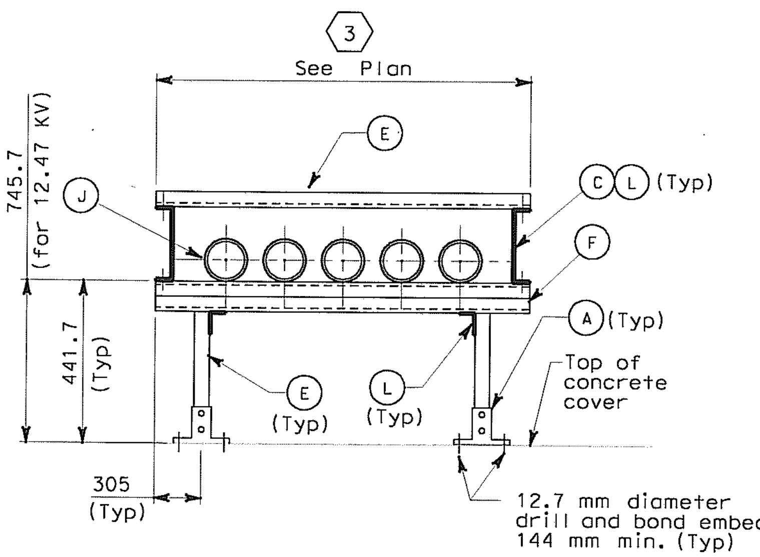

FRONT VIEW

TYPICAL CONDUIT SUPPORT WITHOUT CONDUIT CLAMP

NO SCALE

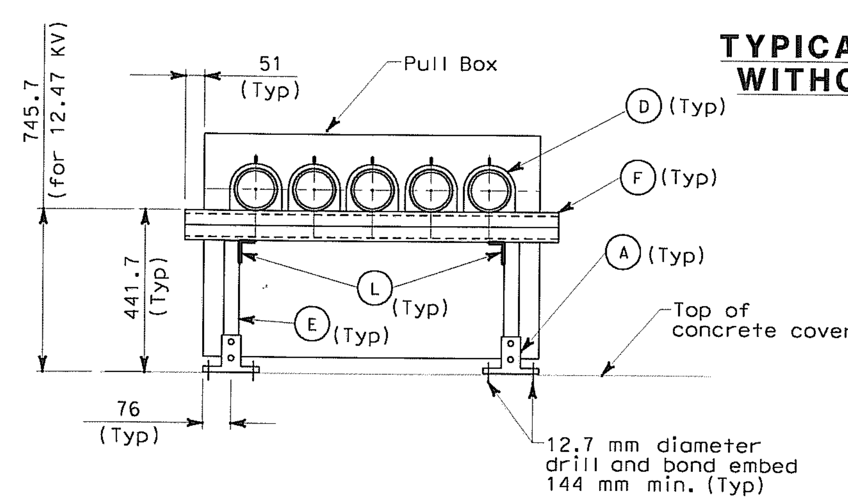

FRONT VIEW

TYPICAL CONDUIT SUPPORT AT PULL BOX

NO SCALE

SHEET NOTES:

1. For pull box sizes and opening see E-21C.
2. For pull box location see E-21.
3. Do not secure flexible conduit at this location.
4. Hardwares and components are for strut channels.

MATERIAL LIST

Note	Item No.	Description
4	A	Strut Post Base 152 mm x 152 mm.
	B	Not used
4	C	Strut channel spring nut, lockwasher and hex bolt (41mm)
4	D	Strut channel conduit clamp for 103 mm
4	E	Strut channel 41 mm x 41 mm
4	F	Double strut channel 41.3 mm x 82.6 mm
	G	Not used
	H	Not used
	J	Liquidtight flexible metal conduit, 103 mm
	K	Liquidtight Insulated flexible metal conduit connector with insulated grounding bushing for 103 mm conduit
4	L	203 mm U-shape fitting

REQUEST FOR INFORMATION NOT ADDRESSED IN THIS CCO REMAIN IN FORCE

MARK	DATE	DESCRIPTIONS	BY	CH'D	CCO#
0	02/25/08	CABLE TRAY CHANGES	TW	RG SE	42S1

REVISIONS

CONTRACT CHANGE ORDER NO.______
SHEET ____ OF ____

DETAILS
UNDERGROUND
PIER W2E PLANS AND SECTIONS

SCALE AS NOTED

DESIGN OVERSIGHT	BEHZAD GOLEMOHAMMADI
CALCULATED/DESIGNED BY	TW
CHECKED BY	EJL
DATE 07/07 REVISED BY	
07/07 DATE REVISED	

STATE OF CALIFORNIA - DEPARTMENT OF TRANSPORTATION
Caltrans

THIS PLAN IS ACCURATE FOR ELECTRICAL WORK ONLY.

ALL DIMENSIONS ARE IN MILLIMETERS UNLESS OTHERWISE SHOWN.

DIST	COUNTY	ROUTE	KILOMETER POST TOTAL PROJECT	SHEET No	TOTAL SHEETS
04	SF	80	13.2/13.9	104 S5	1204

REGISTERED ELECTRICAL ENGINEER 2/22/08 DATE

PLANS APPROVAL DATE

PB AMERICAS, Inc.
A Parsons Brinckerhoff Company
303 Second St., Suite 700N
San Francisco, CA 94107-1317

REGISTERED PROFESSIONAL ENGINEER S. A. ESTOQUE, JR No. E-10151 Exp. 12/31/2008 ELECTRICAL STATE OF CALIFORNIA

The State of California or its officers or agents shall not be responsible for the accuracy or completeness of electronic copies of this plan sheet.

Caltrans now has a web site! To get to the web site, go to http://www.dot.ca.gov

Caltrans Metric

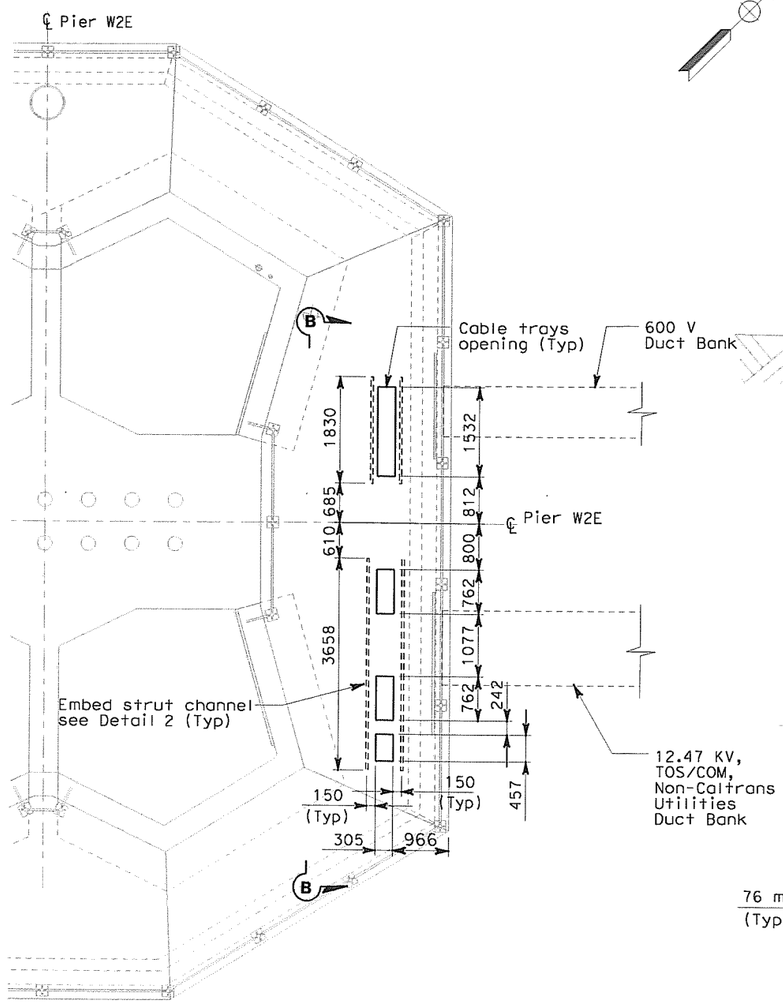

CABLE TRAY OPENING AND CONCRETE INSERT CHANNEL

PLAN AT PIER W2E
SCALE: 1:50

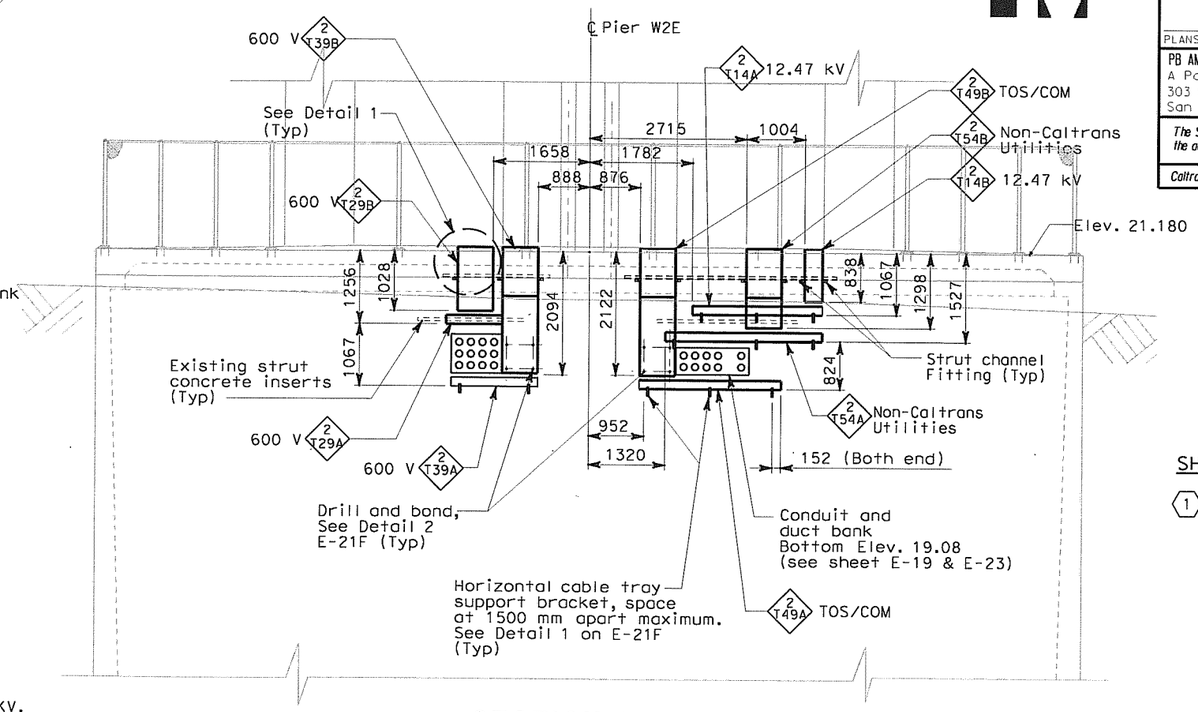

SECTION B-B

SCALE: 1:50

SHEET NOTE:

1. For fill-in material between cable tray and concrete, See Structures.

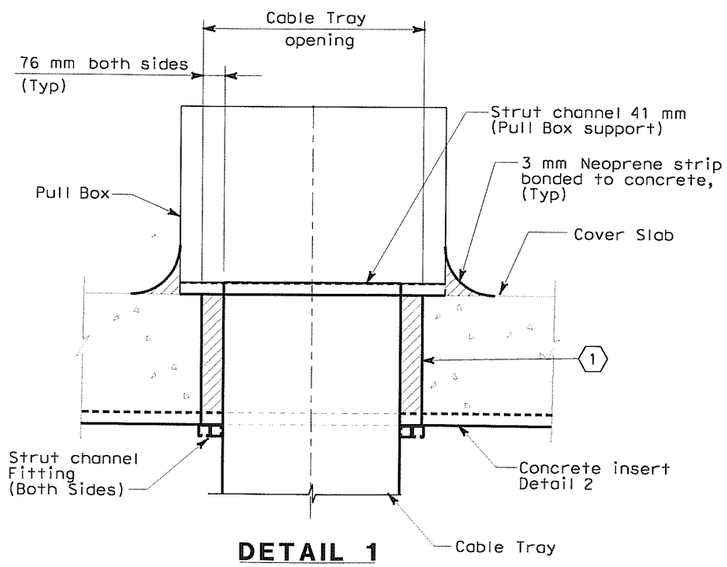

DETAIL 1

SCALE: 1:10

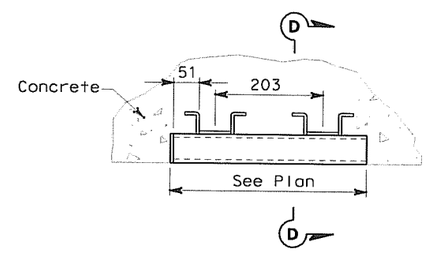

DETAIL 2 CEILING MOUNT

NO SCALE

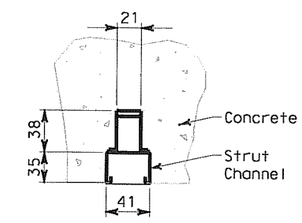

SECTION D-D

NO SCALE

DETAILS
UNDERGROUND
PIER W2E PLANS AND SECTIONS

SCALE AS NOTED

REQUEST FOR INFORMATION NOT ADDRESSED IN THIS CCO REMAIN IN FORCE					
0	02/25/08	CABLE TRAY CHANGES	TW	RG SE	42S1
MARK	DATE	DESCRIPTIONS	BY	CH'D	CCO#
REVISIONS					

CONTRACT CHANGE ORDER NO. _____
SHEET _____ OF _____

THIS PLAN IS ACCURATE FOR ELECTRICAL WORK ONLY.

ALL DIMENSIONS ARE IN MILLIMETERS UNLESS OTHERWISE SHOWN.

FOR REDUCED PLANS ORIGINAL SCALE IS IN MILLIMETERS 0 20 40 60 80

DGN FILE =>T:\13103\MS\pse\SAS Struc\CCO\SAS CCO42S1\04-0120f1_0104S05.dgn
USERNAME =>llorico

CU 04251 EA 0120F1

E-21E

STATE OF CALIFORNIA - DEPARTMENT OF TRANSPORTATION
Caltrans

DESIGN OVERSIGHT: BEHZAD GOLEMOHAMMADI

CALCULATED/ DESIGNED BY	TW	DATE 07/07	REVISED BY
CHECKED BY	EJL	07/07	DATE REVISED

LAST REVISION 00-00-00
DATE PLOTTED => 7/11/2008
TIME PLOTTED => 2:09:27 PM

DIST	COUNTY	ROUTE	KILOMETER POST TOTAL PROJECT	SHEET No	TOTAL SHEETS
04	SF	80	13.2/13.9	104 S6	1204

REGISTERED ELECTRICAL ENGINEER — DATE 2/22/08

REGISTERED PROFESSIONAL ENGINEER S. A. ESTOQUE, JR. No. E-10151 Exp. 12/31/2008 ELECTRICAL STATE OF CALIFORNIA

PLANS APPROVAL DATE

PB AMERICAS, Inc.
A Parsons Brinckerhoff Company
303 Second St., Suite 700N
San Francisco, CA 94107-1317

The State of California or its officers or agents shall not be responsible for the accuracy or completeness of electronic copies of this plan sheet.

Caltrans now has a web site! To get to the web site, go to http://www.dot.ca.gov

Caltrans Metric

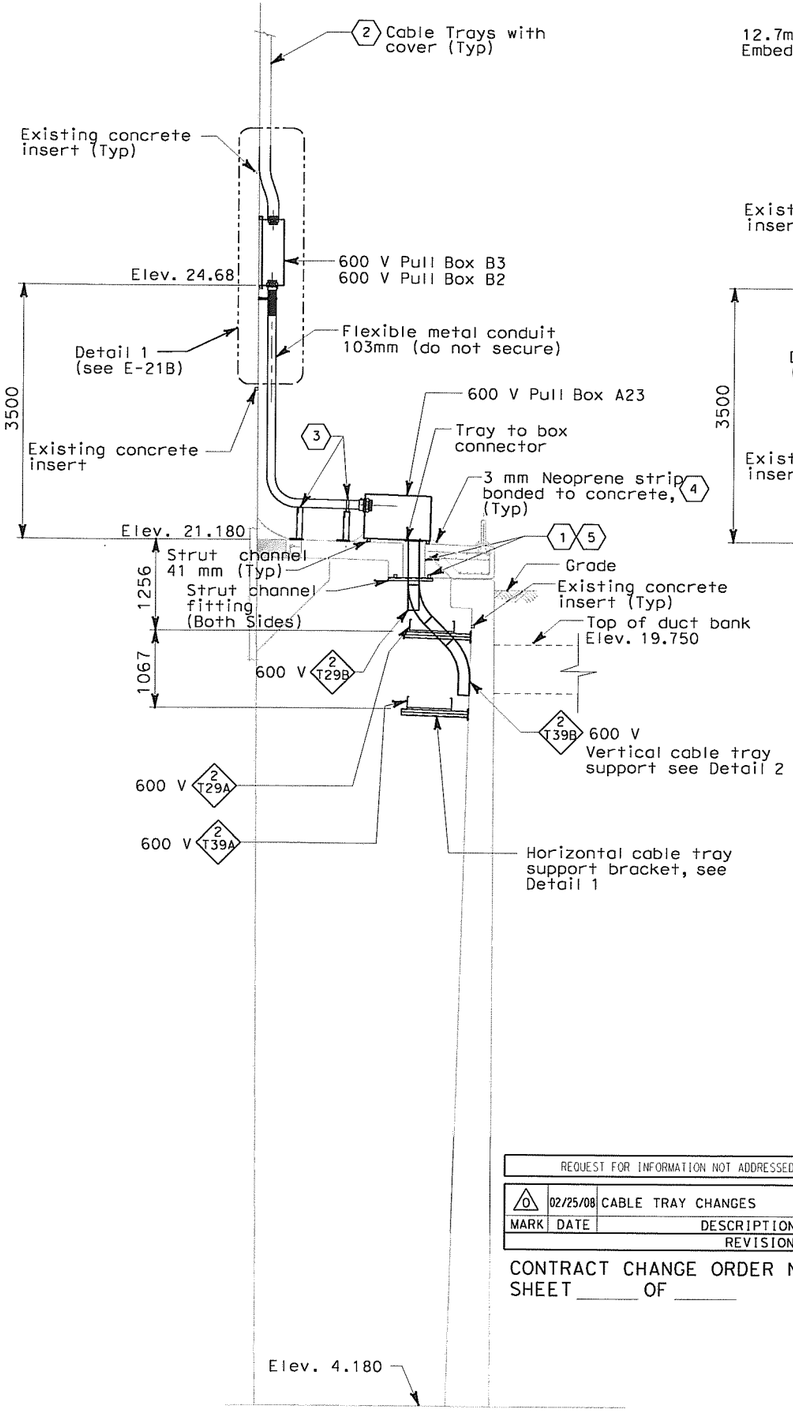

SECTION C-C (6)

SCALE: 1:20

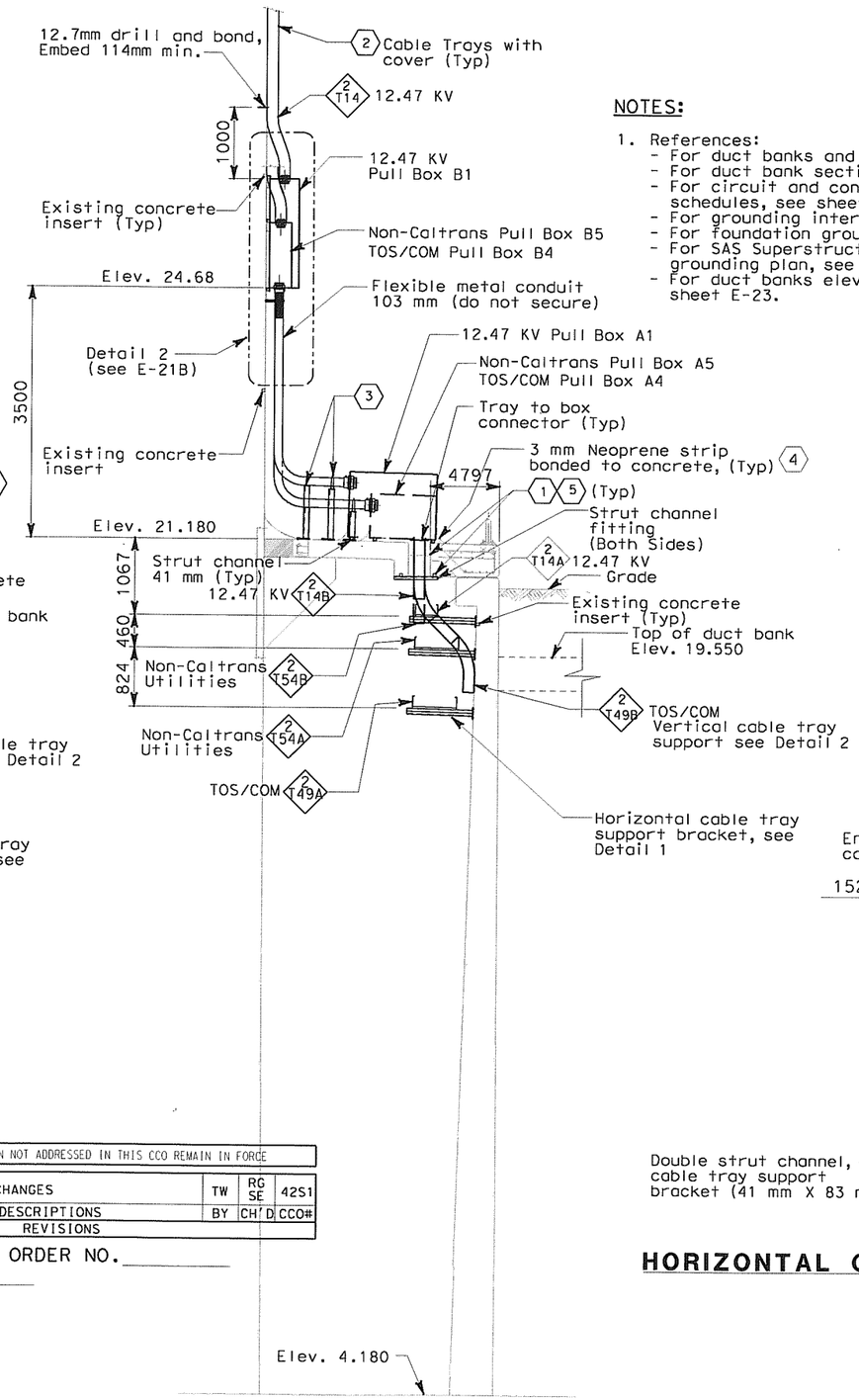

SECTION D-D (6)

SCALE: 1:20

NOTES:

1. References:
   - For duct banks and manholes, see sheet E-11.
   - For duct bank sections, see sheet E-19.
   - For circuit and conduit/cable tray schedules, see sheets starting at E-401.
   - For grounding interface, see sheet E-18.
   - For foundation grounding, see sheet E-22.
   - For SAS Superstructure girder eastbound grounding plan, see sheet E-196.
   - For duct banks elevations at W2E, see sheet E-23.

SHEET NOTES:

1. For fill-in material between cable tray and concrete, see Structures.
2. For continuation see E-213.
3. For conduit support see E-21D.
4. The contractor to provide water tight seal after cables are pulled.
5. For embed strut channel and cable tray opening location at pier W2 cover slab see E-21E.
6. Section C-C and D-D see sheet E-21.

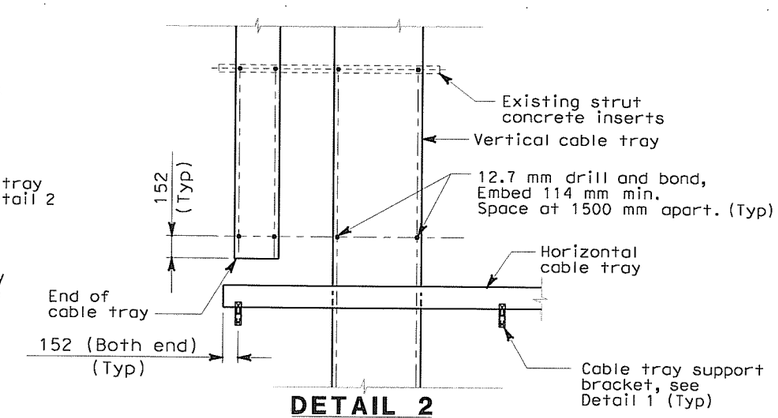

DETAIL 2
VERTICAL CABLE TRAY SUPPORT

NO SCALE

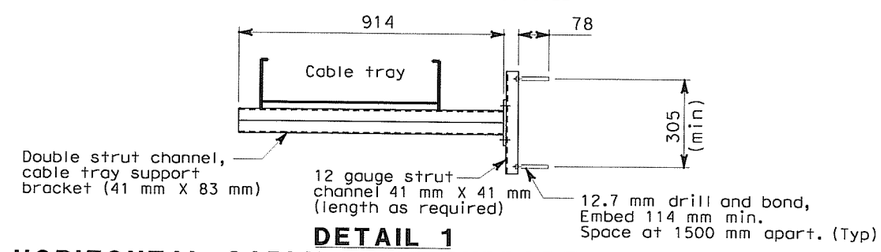

DETAIL 1
HORIZONTAL CABLE TRAY SUPPORT BRACKET

NO SCALE

DETAILS
UNDERGROUND
PIER W2E PLANS AND SECTIONS

SCALE AS NOTED

E-21F

MARK	DATE	DESCRIPTIONS	BY	CH'D	CCO#
0	02/25/08	CABLE TRAY CHANGES	TW	RG SE	42S1

REVISIONS

REQUEST FOR INFORMATION NOT ADDRESSED IN THIS CCO REMAIN IN FORCE

CONTRACT CHANGE ORDER NO. _____
SHEET _____ OF _____

STATE OF CALIFORNIA - DEPARTMENT OF TRANSPORTATION

Caltrans

DESIGN OVERSIGHT: BEHZAD GOLEMOHAMMADI

CALCULATED/DESIGNED BY | TW | DATE | REVISED BY | DATE
CHECKED BY | EJL | DATE | REVISED | DATE

THIS PLAN IS ACCURATE FOR ELECTRICAL WORK ONLY.

ALL DIMENSIONS ARE IN MILLIMETERS UNLESS OTHERWISE SHOWN.

FOR REDUCED PLANS ORIGINAL SCALE IS IN MILLIMETERS 0 20 40 60 80

DGN FILE => T:\13103\MS\pse\SAS Struc\CCO\SAS CCO42S1\04-0120f1_0104S06.dgn
USERNAME => llorico

CU 04251 EA 0120F1

LAST REVISION 00-00-00 DATE PLOTTED => 7/11/2008 TIME PLOTTED => 2:09:49 PM

DIST	COUNTY	ROUTE	KILOMETER POST TOTAL PROJECT	SHEET No	TOTAL SHEETS
04	SF	80	13.2/13.9	106 R1	1204

Caltrans Metric

12/19/02
REGISTERED ELECTRICAL ENGINEER DATE

12-6-04
PLANS APPROVAL DATE

REGISTERED PROFESSIONAL ENGINEER JENS ERLINGSSON No. 8249 Exp. 9/30/06 ELECTRICAL STATE OF CALIFORNIA

PB POWER, Inc.
A Parsons Brinckerhoff Company
303 Second St., Suite 700N
San Francisco, CA 94107-1317

The State of California or its officers or agents shall not be responsible for the accuracy or completeness of electronic copies of this plan sheet.

Caltrans now has a web site! To get to the web site, go to http://www.dot.ca.gov

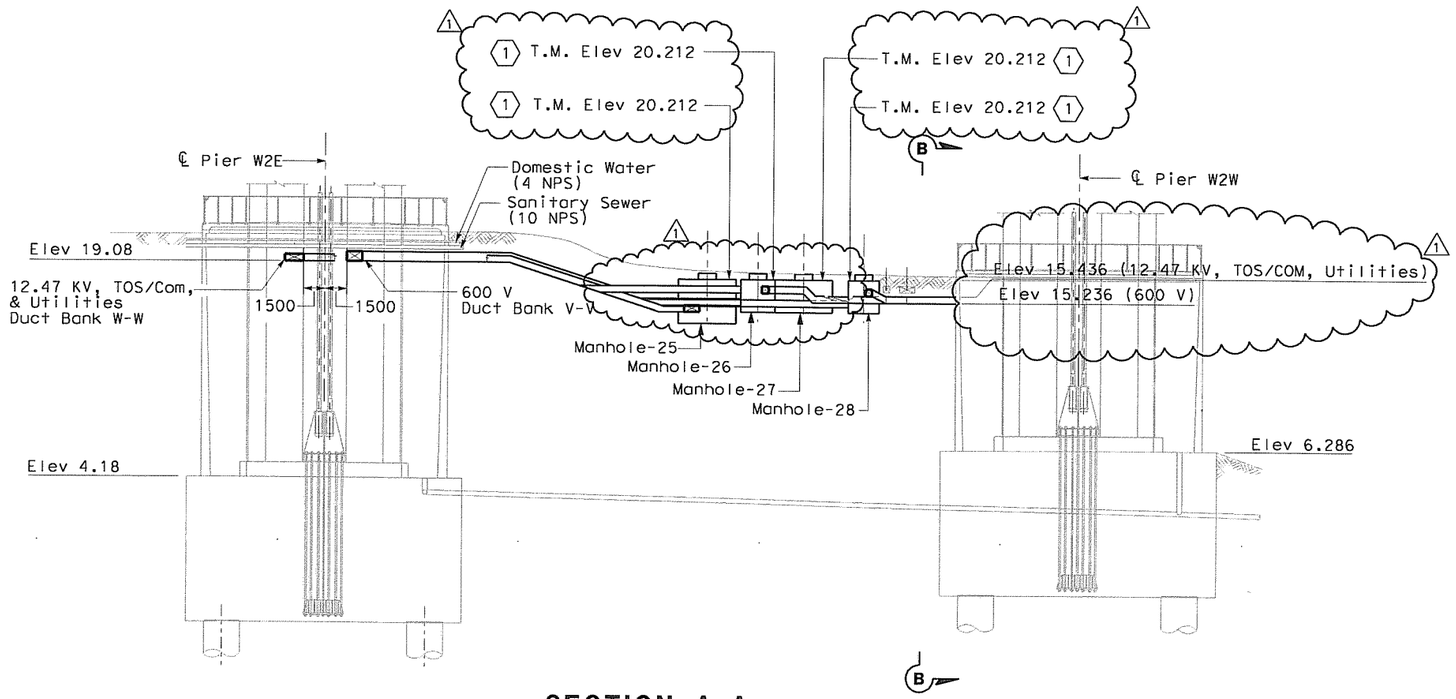

SECTION A-A
(Reference E-11)
SCALE 1:200

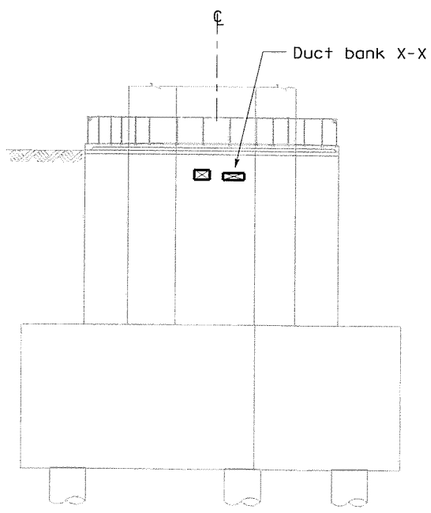

SECTION B-B
SCALE 1:200

SHEET NOTES:

1. Contractor to verify finished grade and may make necessary adjustment to the specified top of manhole elevations and ductbanks to suit field condition.

NOTES:

1. References:
   - For duct banks and sections, see sheet E-11.
   - For typical manhole and duct bank details, see sheet E-17
   - For duct bank sections see sheet E-19
   - For pier W2W sections and plans, see sheet E-20F
   - For pier W2E sections and plans, see sheet E-21F
   - For circuit and conduit/cable tray schedules, see sheets starting at E-401.
2. For other related work, not shown on this sheet, see Electrical Special Provisions.

ABBREVIATION:

T.M. - Top of Manhole

REGISTERED PROFESSIONAL ENGINEER S. A. ESTOQUE, JR No. E-10151 Exp. 12/31/2008 ELECTRICAL STATE OF CALIFORNIA

FOR REVISION ONLY

REQUEST FOR INFORMATION NOT ADDRESSED IN THIS CCO REMAIN IN FORCE

MARK	DATE	DESCRIPTIONS	BY	CH'D	CCO#
1	02/25/08	CABLE TRAY CHANGES	TW	RG SE	42S1

REVISIONS

CONTRACT CHANGE ORDER NO. _____
SHEET _____ OF _____

DETAILS
UNDERGROUND DUCT BANK SECTIONS
SCALE 1:200

E-23

THIS PLAN IS ACCURATE FOR ELECTRICAL WORK ONLY.

ALL DIMENSIONS ARE IN MILLIMETERS UNLESS OTHERWISE SHOWN

FOR REDUCED PLANS ORIGINAL SCALE IS IN MILLIMETERS 0 20 40 60 80

DGN FILE =>T:\13103\MS\pse\SAS Struc\CCO\SAS CC042S1\04-0120f1_0106R01.dgn
USERNAME =>llorico

CU 04251 | EA 0120F1

STATE OF CALIFORNIA - DEPARTMENT OF TRANSPORTATION
Caltrans

DESIGN OVERSIGHT: BEHZAD GOLEMOHAMMADI

CALCULATED/DESIGNED BY: AB | DATE 11/04 | REVISED BY
CHECKED BY: -- | --/-- | DATE REVISED

LAST REVISION 00-00-00
DATE PLOTTED => 7/11/2008
TIME PLOTTED => 2:10:18 PM

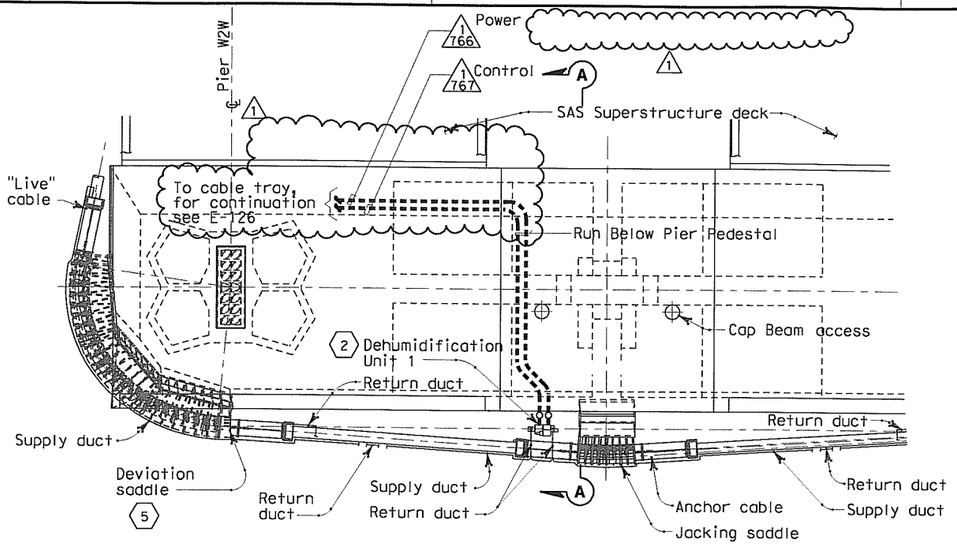

DEHUMIDIFICATION PLAN

NO SCALE

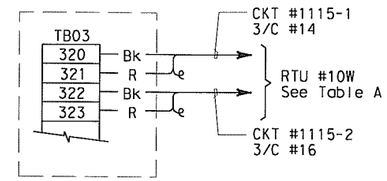

DEHUMIDIFICATION CONTROLLER

SHOWN FOR DEHUMIDIFICATION UNIT #1
FOR OTHER UNITS, SEE TABLE A

REGISTERED PROFESSIONAL ENGINEER S. A. ESTOQUE, JR. No. E-10151 Exp. 12/31/2008 ELECTRICAL STATE OF CALIFORNIA

FOR REVISION ONLY

REQUEST FOR INFORMATION NOT ADDRESSED IN THIS CCO REMAIN IN FORCE					
1	02/25/08	CABLE TRAY CHANGES	TW	RG SE	42S1
MARK	DATE	DESCRIPTIONS	BY	CH'D	CCO#
		REVISIONS			

CONTRACT CHANGE ORDER NO. _____
SHEET _____ OF _____

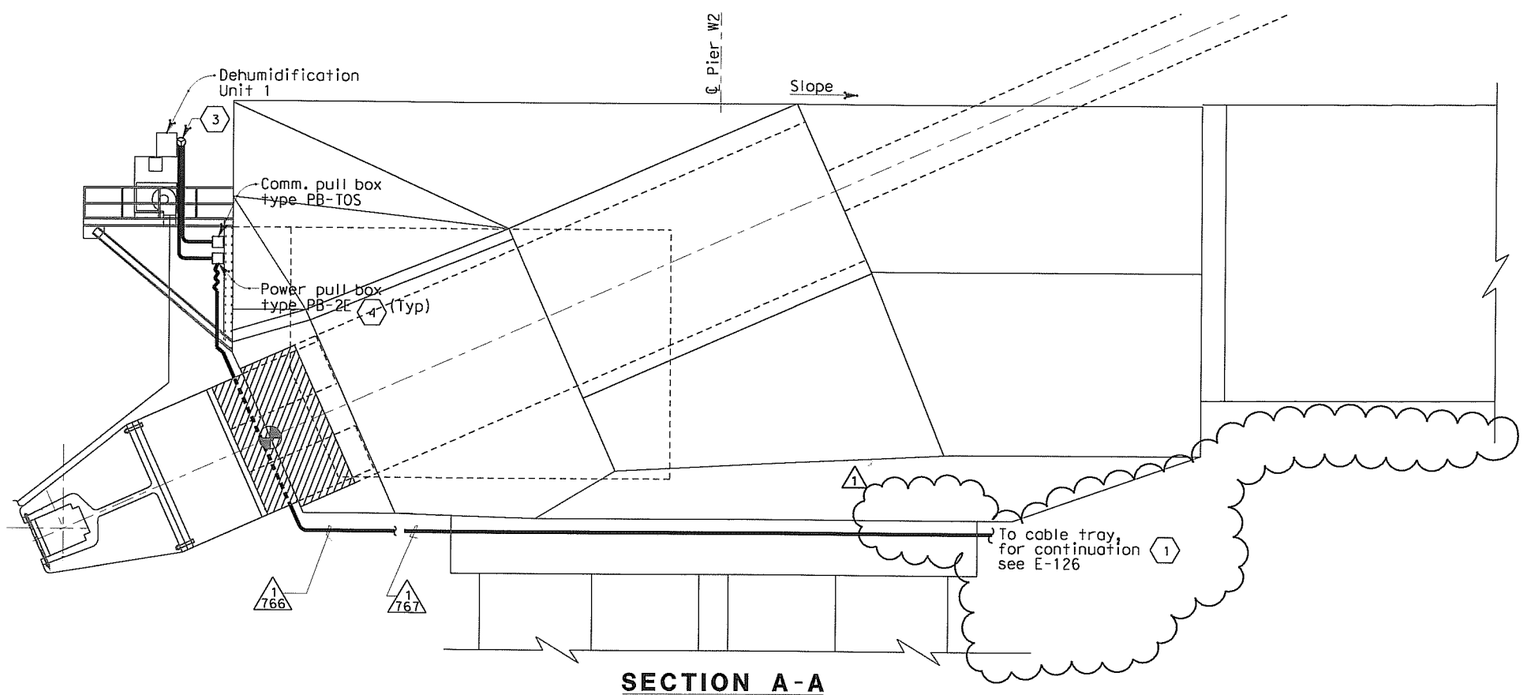

SECTION A-A

NO SCALE

DIST	COUNTY	ROUTE	KILOMETER POST TOTAL PROJECT	SHEET No	TOTAL SHEETS
04	SF	80	13.2/13.9	140 R1	1204

Jens Erlingsson 12/19/02
REGISTERED ELECTRICAL ENGINEER DATE

12-6-04
PLANS APPROVAL DATE

REGISTERED PROFESSIONAL ENGINEER JENS ERLINGSSON No. 8249 Exp. 9/30/06 ELECTRICAL STATE OF CALIFORNIA

PB POWER, Inc.
A Parsons Brinckerhoff Company
303 Second St., Suite 700N
San Francisco, CA 94107-1317

The State of California or its officers or agents shall not be responsible for the accuracy or completeness of electronic copies of this plan sheet.

Caltrans now has a web site! To get to the web site, go to http://www.dot.ca.gov

Caltrans Metric

SHEET NOTES:

1. Route power and control conduits and cables from dehumidifier to 600 V cable tray #1T29 for circuits #1115, 1115-1 and 1115-2.
2. Dehumidification Unit 1 is 480 V, 3 phase, 16 kW (estimated load) with integral circuit breaker disconnect.
3. Final connections to dehumidifier shall be liquid tight flexible metal conduit.
4. Type PB-2E junction box (203 x 203 x 102) see pull box schedule sheet E-83.
5. Views of Deviation Saddle are for illustration only. For Deviation Saddle details, see "West Deviation Saddle Details" sheets.

NOTES:

1. References:
   - See sheets M001 through M011 for dehumidifier plans and details.
   - See sheet E-29 for dehumidifier single line diagram (circuit #1115).

TABLE A

EQUIPMENT	CIRCUIT NO.	RTU CAB.	DWG NO.
Dehumidification Unit #1	1115-1 1115-2	RTU #10W RTU #10W	E-330 E-330
Dehumidification Unit #2	2120-1 2120-2	RTU #10E RTU #10E	E-331 E-331
Dehumidification Unit #3	1117-1 1117-2	RTU #11W RTU #11W	E-332 E-332
Dehumidification Unit #4	1118-1 1118-2	RTU #11W RTU #11W	E-332 E-332
Dehumidification Unit #5	2121-1 2121-2	RTU #10E RTU #10E	E-331 E-331

DETAILS
SAS SUPERSTRUCTURE ROADWAY WESTBOUND DEHUMIDIFIER UNIT 1

SCALE AS NOTED

E-79

STATE OF CALIFORNIA - DEPARTMENT OF TRANSPORTATION
Caltrans

DESIGN OVERSIGHT: BEHZAD GOLEMOHAMMADI

CALCULATED/ DESIGNED BY	KG	DATE 12/01	REVISED BY
CHECKED BY	FK	12/01	DATE REVISED

THIS PLAN ACCURATE FOR ELECTRICAL WORK ONLY.

FOR REDUCED PLANS ORIGINAL SCALE IS IN MILLIMETERS 0 20 40 60 80

DGN FILE =>T:\13103\MS\pse\SAS Struc\CCO\SAS CCO42S1\04-0120f1_0140R01.dgn
USERNAME =>llorico

CU 04251 | EA 0120F1

LAST REVISION 00-00-00
DATE PLOTTED => 7/11/2008
TIME PLOTTED => 2:30:10 PM

DIST	COUNTY	ROUTE	KILOMETER POST TOTAL PROJECT	SHEET No.	TOTAL SHEETS
04	SF	80	13.2/13.9	149 R2	1204

Jens Erlingsson 12/19/02
REGISTERED ELECTRICAL ENGINEER DATE

12-6-04
PLANS APPROVAL DATE

REGISTERED PROFESSIONAL ENGINEER JENS ERLINGSSON No. 8249 Exp. 9/30/06 ELECTRICAL STATE OF CALIFORNIA

PB POWER, Inc.
A Parsons Brinckerhoff Company
303 Second St., Suite 700N
San Francisco, CA 94107-1317

The State of California or its officers or agents shall not be responsible for the accuracy or completeness of electronic copies of this plan sheet.

Caltrans now has a web site! To get to the web site, go to http://www.dot.ca.gov

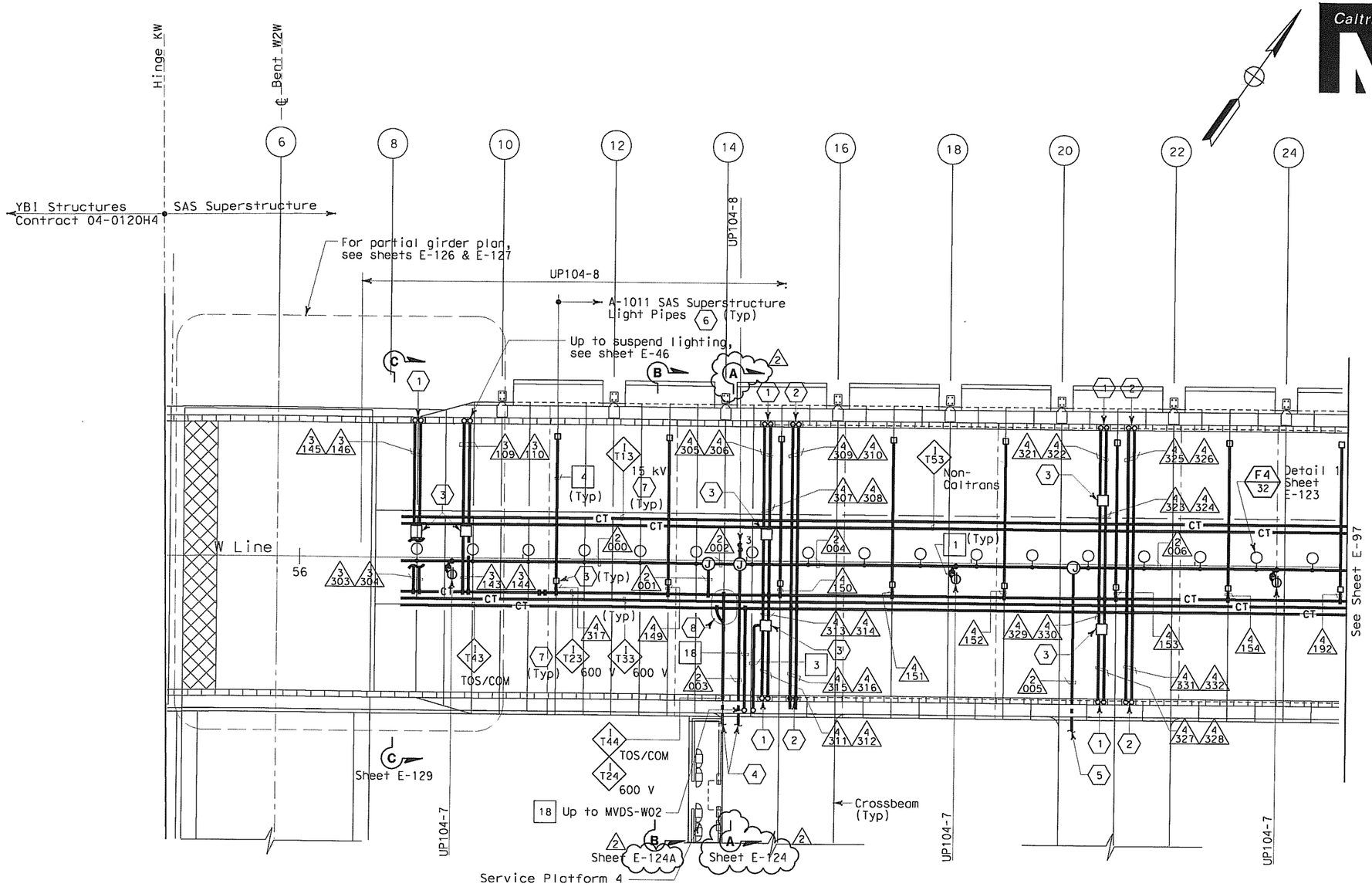

SAS SUPERSTRUCTURE - CONDUIT AND CABLE TRAY PLAN

SHEET NOTES:

1. Conduit up to PB-LTG located in barrier, see sheet E-46.
2. Conduit up to PB-COM located in barrier, see sheet E-46.
3. PB-2A locate on top of floor.
4. For cable tray run and lighting inside crossbeam, see sheet E-114.
5. For lighting inside crossbeam, see sheet E-119.
6. PB-2L with circuit for future light pipes. See sheet E-121 for installation details and E-130 for lighting schedule.
7. For cable tray & ground bar support, refer to sheet E-125.
8. For fiber splice tray detail, refer to sheet E-356.

NOTES:

1. References:
   - TOS equipment is shown for conduit routing only. For typical details of TOS controller and devices, see sheets E-344 through E-357.
   - For types of pull boxes, splice boxes and enclosures, see sheet E-83.
   - For bridge grounding plan, see sheet E-111.
   - For circuit and conduit/cable tray schedules, see sheets starting at E-401.
2. For other work related to Hinge KW and items not shown on this sheet, see Electrical Special Provisions.
3. The girder lighting fixtures are shown diagrammatically. Contractor shall install fixtures at railing posts with a maximum of 8000 mm between fixtures. For types and typical lighting fixture installation details, see sheet E-123.
4. The cable trays are shown diagrammatically. For typical girder cable tray plans and sections, see sheets E-124 and E-125.

REGISTERED PROFESSIONAL ENGINEER FADI WALIEDDINE No. 11465 Exp. 12/31/2009 ELECTRICAL STATE OF CALIFORNIA

FOR REVISION ONLY

REQUEST FOR INFORMATION NOT ADDRESSED IN THIS CCO REMAIN IN FORCE

MARK	DATE	DESCRIPTIONS	BY	CH'D	CCO#
2	02/25/08	CABLE TRAY CHANGES	RG	FW	42S1
1	02/19/08	ELECTRICAL MODIFICATIONS	MP EL	RR	42

REVISIONS

CONTRACT CHANGE ORDER NO. _____
SHEET _____ OF _____

SAS SUPERSTRUCTURE GIRDER WESTBOUND
LIGHTING AND ELECTRICAL SYSTEMS
SCALE 1:200

THIS PLAN IS ACCURATE FOR ELECTRICAL WORK ONLY.

ALL DIMENSIONS ARE IN MILLIMETERS UNLESS OTHERWISE SHOWN.

E-96

STATE OF CALIFORNIA - DEPARTMENT OF TRANSPORTATION
Caltrans

DESIGN OVERSIGHT: BEHZAD GOLEMOHAMMADI
CALCULATED/DESIGNED BY: FK DATE 8/02
CHECKED BY: IAH 8/02
REVISED BY / DATE REVISED

LAST REVISION 00-00-00
DATE PLOTTED => 7/11/2008
TIME PLOTTED => 2:30:38 PM

FOR REDUCED PLANS ORIGINAL SCALE IS IN MILLIMETERS 0 20 40 60 80
DGN FILE =>T:\13103\MS\pse\SAS Struc\CCO\SAS CCO42S1\04-0120f1_0149R02.dgn
USERNAME =>llorico
CU 04251
EA 0120F1

DIST	COUNTY	ROUTE	KILOMETER POST TOTAL PROJECT	SHEET NO	TOTAL SHEETS
04	SF	80	13.2/13.9	154 R2	1204

REGISTERED ELECTRICAL ENGINEER 12/19/02 DATE

12-6-04
PLANS APPROVAL DATE

REGISTERED PROFESSIONAL ENGINEER JENS ERLINGSSON No. 8249 Exp. 9/30/06 ELECTRICAL STATE OF CALIFORNIA

PB POWER, Inc.
A Parsons Brinckerhoff Company
303 Second St., Suite 700N
San Francisco, CA 94107-1317

The State of California or its officers or agents shall not be responsible for the accuracy or completeness of electronic copies of this plan sheet.

Caltrans now has a web site! To get to the web site, go to http://www.dot.ca.gov

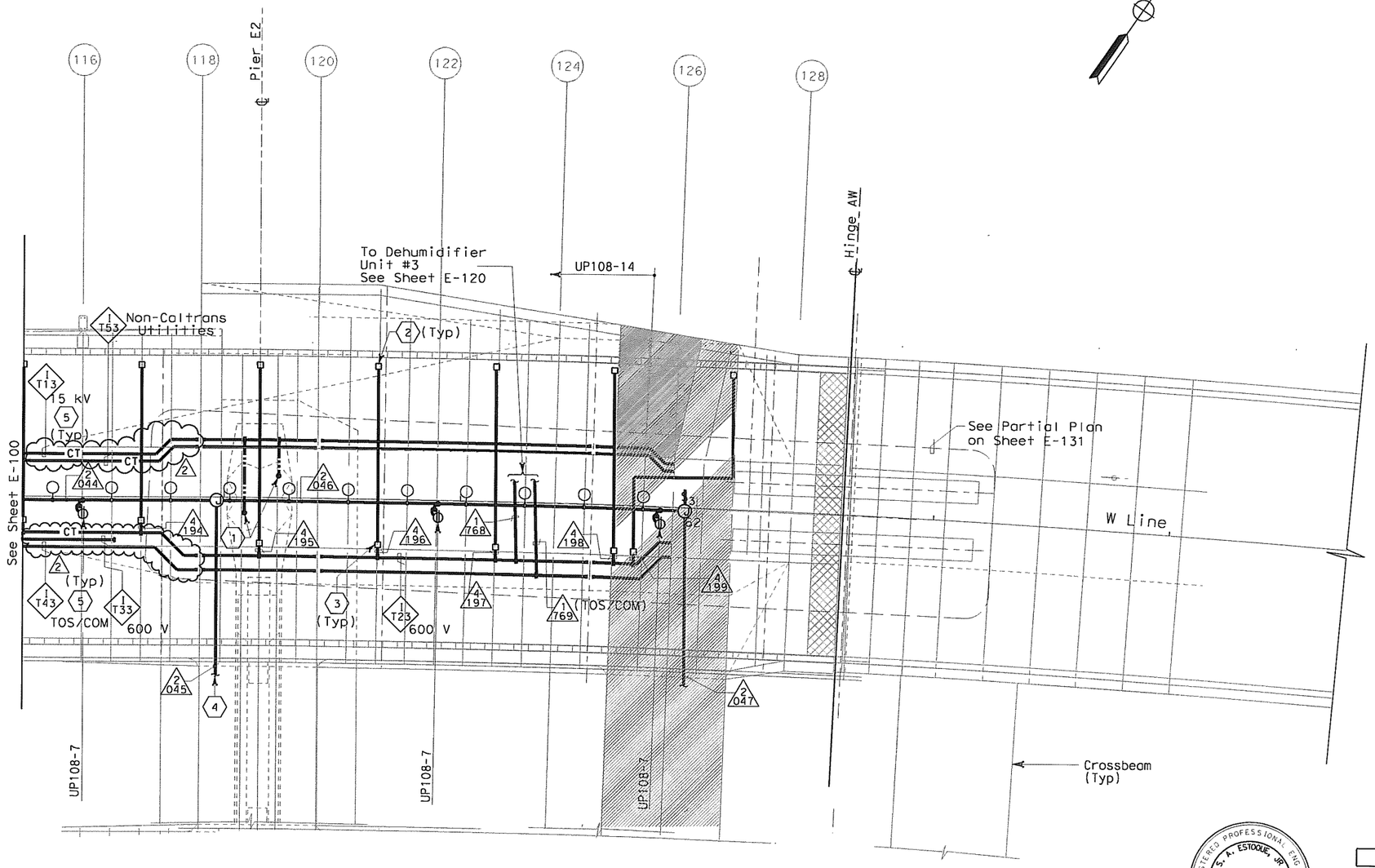

SHEET NOTES:

1. 250 kcmil bare copper grounding conductor exothermically welded to 500 kcmil system ground conductor. See E2/T1 structures EA-0120E1 for limit of work.
2. PB-2L with circuit for future light pipes.
3. PB-2A, locate on top of floor.
4. For lighting inside crossbeam, see sheet E-119.
5. For cable tray & ground bar support, refer to sheet E-125.

NOTES:

1. References:
   - TOS equipment is shown for conduit routing only. For typical details of TOS controller and devices, see sheets E-344 through E-361.
   - For types of pull boxes, splice boxes and enclosures, see sheet E-83.
   - For bridge grounding plan, see sheet E-111.
   - For circuit and conduit/cable tray schedules, see sheets starting at E-401.
2. For other work related to Hinge AW and items not shown on this sheet, see Electrical Special Provisions.
3. The girder lighting fixtures are shown diagrammatically. Contractor shall install fixtures at railing posts with a maximum of 8000 mm between fixtures. For types and typical lighting fixture installation details, see sheet E-123.
4. The cable trays are shown diagrammatically. For typical girder cable tray plans and sections, see sheets E-124 and E-125.

REGISTERED PROFESSIONAL ENGINEER S. A. ESTOQUE, JR. No. E-10151 Exp. 12/31/2008 ELECTRICAL STATE OF CALIFORNIA

FOR REVISION ONLY

REQUEST FOR INFORMATION NOT ADDRESSED IN THIS CCO REMAIN IN FORCE

MARK	DATE	DESCRIPTIONS	BY	CH'D	CCO#
2	02/25/08	CABLE TRAY CHANGES	MP	RG SE	42S1
1	02/19/08	ELECTRICAL MODIFICATIONS	MP EL	RR	42

REVISIONS

CONTRACT CHANGE ORDER NO. _____
SHEET _____ OF _____

SAS SUPERSTRUCTURE - CONDUIT AND CABLE TRAY PLAN

SAS SUPERSTRUCTURE GIRDER WESTBOUND
LIGHTING AND ELECTRICAL SYSTEMS

SCALE 1:200

THIS PLAN IS ACCURATE FOR ELECTRICAL WORK ONLY.

E-101

STATE OF CALIFORNIA - DEPARTMENT OF TRANSPORTATION
Caltrans

DESIGN OVERSIGHT: BEHZAD GOLEMOHAMMADI

CALCULATED/DESIGNED BY: FK | DATE | REVISED BY
CHECKED BY: IAH | DATE REVISED

LAST REVISION 00-00-00 | DATE PLOTTED => 7/11/2008 | TIME PLOTTED => 2:36:27 PM

FOR REDUCED PLANS ORIGINAL SCALE IS IN MILLIMETERS 0 20 40 60 80

DGN FILE =>T:\13103\MS\pse\SAS Struc\CCO\SAS CCO42S1\CCO 42S1 Final Submittal 2008-07-11\04-0120f1_0154R02.dgn
USERNAME =>llorico

CU 04251 | EA 0120F1

DIST	COUNTY	ROUTE	KILOMETER POST TOTAL PROJECT	SHEET No	TOTAL SHEETS
04	SF	80	13.2/13.9	155 R1	1204

REGISTERED ELECTRICAL ENGINEER 2/6/04 DATE

12-6-04
PLANS APPROVAL DATE

REGISTERED PROFESSIONAL ENGINEER JENS ERLINGSSON No. 8249 Exp. 9/30/06 ELECTRICAL STATE OF CALIFORNIA

PB POWER, Inc.
A Parsons Brinckerhoff Company
303 Second St., Suite 700N
San Francisco, CA 94107-1317

The State of California or its officers or agents shall not be responsible for the accuracy or completeness of electronic copies of this plan sheet.

Caltrans now has a web site! To get to the web site, go to http://www.dot.ca.gov

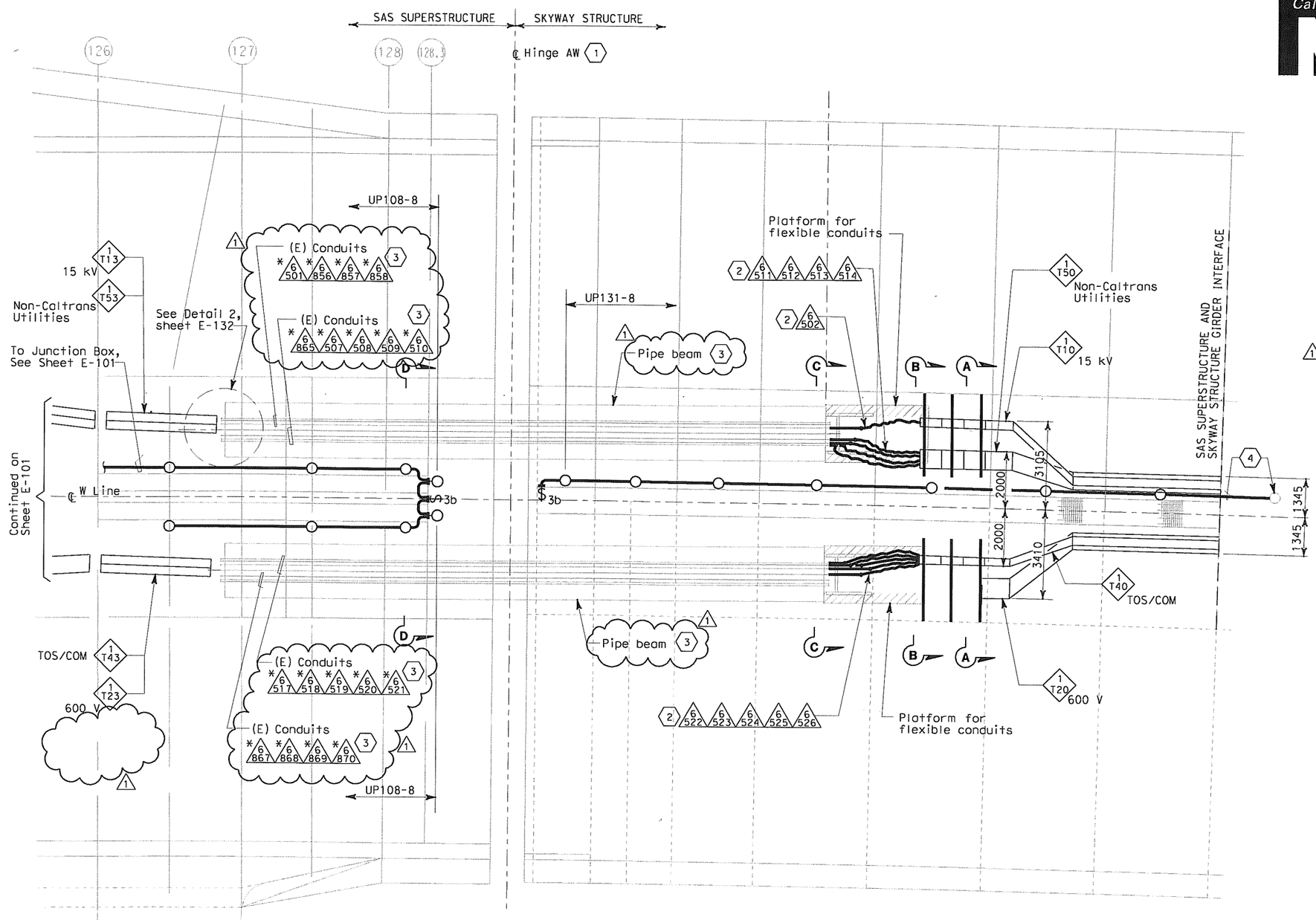

SHEET NOTES:

(1) Hinge AW electrical design is based on the maximum expansion joint movement opening of 1243 mm.

(2) Arrange and group the flexible 103 mm conduits to maintain a minimum voltage level separation of 460 mm between systems.

(1)(3) Existing conduits (*) inside pipe beam are supplied in Skyway contract.

(4) Terminate conduit to the next lighting fixture and splice wiring to circuit UP131-8 of Skyway Structure. Contractor to adjust as required.

NOTES:

1. Minimum radius of cable tray fittings shall be 610 mm.
2. Minimum radius of 103 mm conduit bends shall be 610 mm.
3. Cables/circuits passing through the hinge locations shall be provided with cable identification tag at both ends of Hinge.
4. For additional work related not shown on this drawing, see Electrical Special Provisions.
5. Section A-A and B-B see sheet E-132B.
6. Section C-C and Section D-D, see sheet E-132C.

REGISTERED PROFESSIONAL ENGINEER S. A. ESTOQUE JR No. E-10151 Exp. 12/31/2008 ELECTRICAL STATE OF CALIFORNIA

FOR REVISION ONLY

PLAN
SCALE: 1:75

REQUEST FOR INFORMATION NOT ADDRESSED IN THIS CCO REMAIN IN FORCE

MARK	DATE	DESCRIPTIONS	BY	CH'D	CCO#
1	02/25/08	CABLE TRAY CHANGES	JD	RG SE	42S1

REVISIONS

CONTRACT CHANGE ORDER NO. _____
SHEET _____ OF _____

THIS PLAN IS ACCURATE FOR ELECTRICAL WORK ONLY.

SAS SUPERSTRUCTURE AND SKYWAY STRUCTURE
GIRDER INTERFACE WESTBOUND
AS NOTED

E-101A

ALL DIMENSIONS ARE IN MILLIMETERS UNLESS OTHERWISE SHOWN

FOR REDUCED PLANS ORIGINAL SCALE IS IN MILLIMETERS 0 20 40 60 80

DGN FILE =>T:\13103\MS\pse\SAS Struc\CCO\SAS CC042S1\CCO 42S1 Final Submittal 2008-07-11\04-0120f1_0155R01.dgn
USERNAME =>llorico

CU 04251 | EA 0120F1

DATE PLOTTED => 7/11/2008
TIME PLOTTED => 2:43:02 PM

LAST REVISION 00-00-00

STATE OF CALIFORNIA - DEPARTMENT OF TRANSPORTATION
Caltrans

DESIGN OVERSIGHT BEHZAD GOLEMOHAMMADI

CALCULATED/ DESIGNED BY	CYF	DATE 12/03	REVISED BY	EJL
CHECKED BY	EJL	1/04	DATE REVISED	2/04

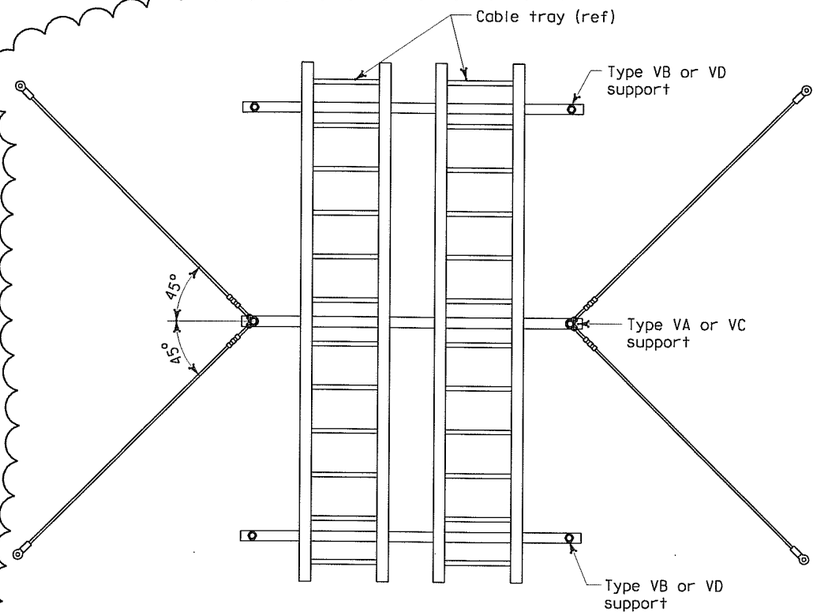

PLAN VIEW - CABLE TRAY SUPPORTS

MATERIAL LIST

Item No.	Description	Type VA thru VE
A	Deleted	
B	Deleted	
C	Threaded steel hanger rod, 13 mm diameter	X
D	Strut channel spring nut, lock washer and hex bolt	X
E	Hold down clamp Cooper B-Line #9SS6-1205 or equal	X
F	Strut hanger trapeze hardware kit	X
G	Heavy duty hold down clamp Cooper B-Line #9SS6-1241 or equal	
H	Deleted	
J	Rod hanger expansion anchor, 13 mm dia, 100 mm minimum depth embedment and allowable load (in tension) of 4.45 kN	X
K	Deleted	
L	Deleted	
M	Rod hanger seismic bracing kit (includes 4-stake eyes, 4-oval sleeves, 4-URC clips and 4-3048mm long wire cables) PW Industries part no. PW18-C26-10/C-SP-316SS or equal	X
N	Strut channel, 41 mm x 82 mm (Double)	X
P	Expansion/sleeve anchors 13 mm dia x 76 mm long hex type	X
O	Flat washer 13 mm dia bolt size	X
R	Deleted	
S	Threaded rod (13 mm) with stiffener & stiffener clips	X
T	Rod coupler, hex nut and washer for expansion anchor	X
U	Deleted	
V	Deleted	
W	Deleted	

Caltrans Metric

DIST	COUNTY	ROUTE	KILOMETER POST TOTAL PROJECT	SHEET No.	TOTAL SHEETS
04	SF	80	13.2/13.9	174 R1	1204

Jens Erlingsson 12/19/02
REGISTERED ELECTRICAL ENGINEER DATE

12-6-04
PLANS APPROVAL DATE

REGISTERED PROFESSIONAL ENGINEER JENS ERLINGSSON No. 8249 Exp. 9/30/06 ELECTRICAL STATE OF CALIFORNIA

PB POWER, Inc.
A Parsons Brinckerhoff Company
303 Second St., Suite 700N
San Francisco, CA 94107-1317

The State of California or its officers or agents shall not be responsible for the accuracy or completeness of electronic copies of this plan sheet.

Caltrans now has a web site! To get to the web site, go to http://www.dot.ca.gov

REGISTERED PROFESSIONAL ENGINEER S. A. ESTOQUE, JR. No. E-10151 Exp. 12/31/2008 ELECTRICAL STATE OF CALIFORNIA

FOR REVISION ONLY

REQUEST FOR INFORMATION NOT ADDRESSED IN THIS CCO REMAIN IN FORCE

MARK	DATE	DESCRIPTIONS	BY	CH'D	CCO#
1	02/25/08	CABLE TRAY CHANGES	RG	SE	42S1

REVISIONS

CONTRACT CHANGE ORDER NO. _____
SHEET _____ OF _____

NOTES:

- For typical cable tray attachment details, see E-122A.

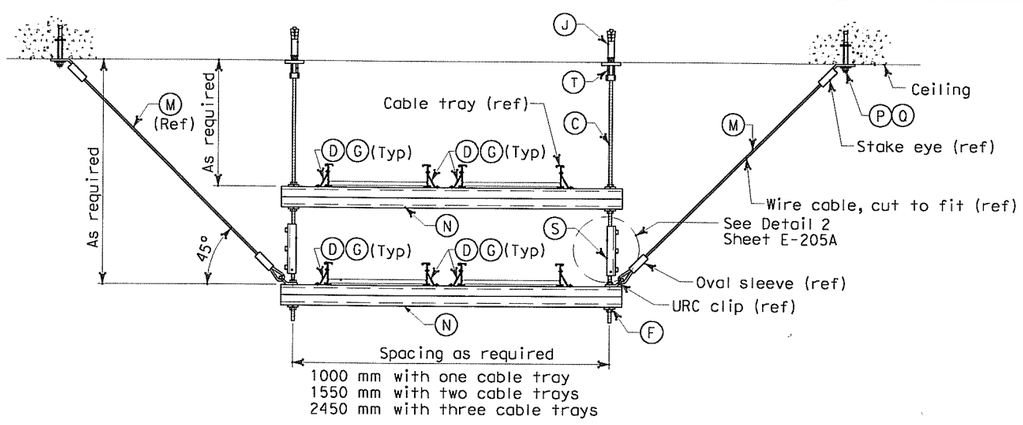

TYPE VC CABLE TRAY SUPPORT ELEVATION

TYPE VD CABLE TRAY SUPPORT ELEVATION WITHOUT (ITEM M) SEISMIC BRACING KIT

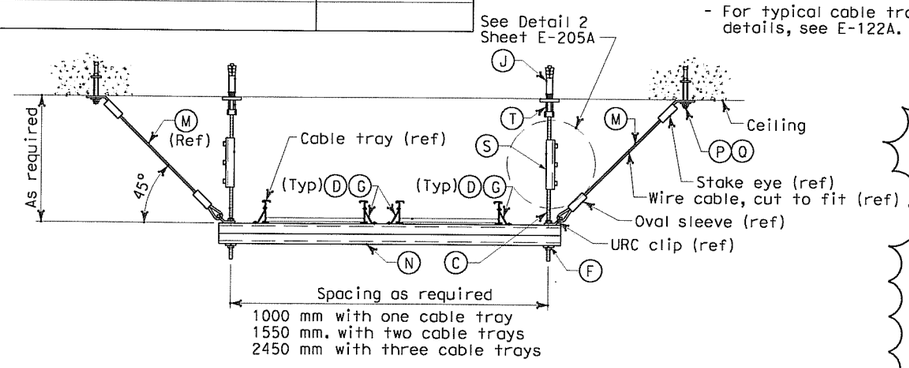

TYPE VA CABLE TRAY SUPPORT ELEVATION

TYPE VB CABLE TRAY SUPPORT ELEVATION WITHOUT (ITEM M) SEISMIC BRACING KIT

DETAILS
SAS SUPERSTRUCTURE GIRDER WESTBOUND TYPICAL TRAY SUPPORTS
NO SCALE

E-122

THIS PLAN ACCURATE FOR ELECTRICAL WORK ONLY.

ALL DIMENSIONS ARE IN MILLIMETERS UNLESS OTHERWISE SHOWN

FOR REDUCED PLANS ORIGINAL SCALE IS IN MILLIMETERS 0 20 40 60 80

DGN FILE =>T:\13103\MS\pse\SAS Struc\CCO\SAS CC042S1\CCO 42S1 Final Submittal 2008-07-11\04-0120f1_0174R01.dgn
USERNAME =>llorico

CU 04251 | EA 0120F1

LAST REVISION 00-00-00
DATE PLOTTED => 7/11/2008
TIME PLOTTED => 2:43:24 PM

	DATE	REVISED BY	DATE REVISED
CALCULATED/DESIGNED BY	RG 07/07		
CHECKED BY	ES 07/07		

DESIGN OVERSIGHT
BEHZAD GOLEMOHAMMADI

STATE OF CALIFORNIA - DEPARTMENT OF TRANSPORTATION
Caltrans

FILE: T:\203\ms\pse\electrical\cont\42ses1680.dgn
DATE: 12/20/01 16:16

DIST	COUNTY	ROUTE	KILOMETER POST TOTAL PROJECT	SHEET No	TOTAL SHEETS
04	SF	80	13.2/13.9	174 S1	1204

REGISTERED ELECTRICAL ENGINEER 2/20/08 DATE

PLANS APPROVAL DATE

REGISTERED PROFESSIONAL ENGINEER S. A. ESTOOKE, JR. No. E-10151 Exp. 12/31/2008 ELECTRICAL STATE OF CALIFORNIA

PB AMERICAS, Inc.
A Parsons Brinckerhoff Company
303 Second St., Suite 700N
San Francisco, CA 94107-1317

The State of California or its officers or agents shall not be responsible for the accuracy or completeness of electronic copies of this plan sheet.

Caltrans now has a web site! To get to the web site, go to http://www.dot.ca.gov

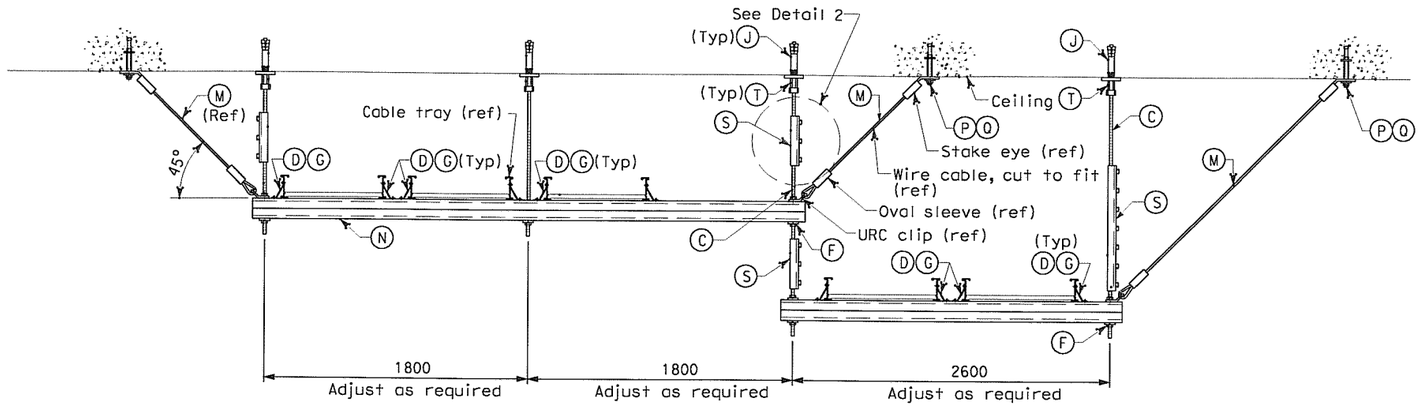

TYPE VE CABLE TRAY SUPPORT ELEVATION

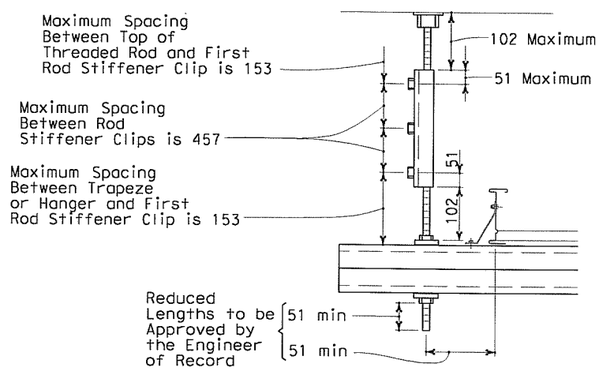

DETAIL 2

REQUEST FOR INFORMATION NOT ADDRESSED IN THIS CCO REMAIN IN FORCE					
1	02/25/08	CABLE TRAY CHANGES	RG	SE	42S1
MARK	DATE	DESCRIPTIONS	BY	CH'D	CCO#
REVISIONS					

CONTRACT CHANGE ORDER NO. _____
SHEET _____ OF _____

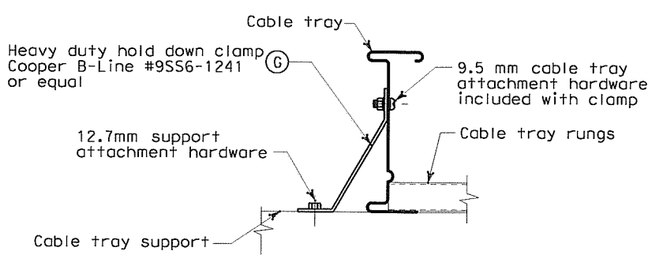

TYPE I

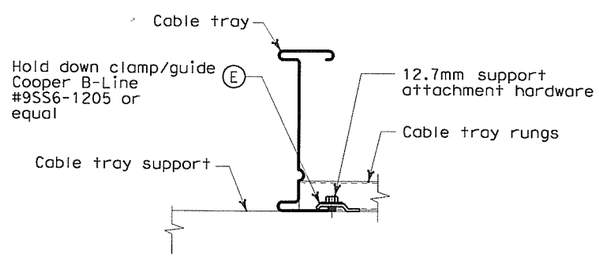

TYPE II
(OPTIONAL)

TYPICAL CABLE TRAY ATTACHMENT

MATERIAL LIST

Item No.	Description	Type VA thru VE
(A)	Deleted	
(B)	Deleted	
(C)	Threaded steel hanger rod, 13 mm diameter	X
(D)	Strut channel spring nut, lock washer and hex bolt	X
(E)	Hold down clamp Cooper B-Line #9SS6-1205 or equal	X
(F)	Strut hanger trapeze hardware kit	X
(G)	Heavy duty hold down clamp Cooper B-Line #9SS6-1241 or equal	
(H)	Deleted	
(J)	Rod hanger expansion anchor, 13 mm dia, 100 mm minimum depth embedment and allowable load (in tension) of 4.45 kN	X
(K)	Deleted	
(L)	Deleted	
(M)	Rod hanger seismic bracing kit (includes 4-stake eyes, 4-oval sleeves, 4-URC clips and 4-3048mm long wire cables) PW Industries part no. PW18-C26-10/C-SP-316SS or equal	X
(N)	Strut channel, 41 mm x 82 mm (Double)	X
(P)	Expansion/sleeve anchors 13 mm dia x 76 mm long hex type	X
(Q)	Flat washer 13 mm dia bolt size	X
(R)	Deleted	
(S)	Threaded rod (13 mm) with stiffener & stiffener clips	X
(T)	Rod coupler, hex nut and washer for expansion anchor	X
(U)	Deleted	
(V)	Deleted	
(W)	Deleted	

DETAILS
SAS SUPERSTRUCTURE GIRDER WESTBOUND
TYPICAL TRAY SUPPORTS
NO SCALE

E-122A

THIS PLAN ACCURATE FOR ELECTRICAL WORK ONLY.

ALL DIMENSIONS ARE IN MILLIMETERS UNLESS OTHERWISE SHOWN

FOR REDUCED PLANS ORIGINAL SCALE IS IN MILLIMETERS 0 20 40 60 80

DGN FILE =>T:\13103\MS\pse\SAS Struc\CCO\SAS CCO42S1\CCO 42S1 Final Submittal 2008-07-11\04-0120F1_0174S01.dgn
USERNAME =>llorico

CU 04251 EA 0120F1

LAST REVISION 00-00-00 DATE PLOTTED => 7/11/2008 TIME PLOTTED => 2:43:45 PM

STATE OF CALIFORNIA - DEPARTMENT OF TRANSPORTATION
Caltrans

DESIGN OVERSIGHT BEHZAD GOLEMOHAMMADI

CALCULATED/DESIGNED BY RG DATE 07/07 REVISED BY
CHECKED BY ES 07/07 DATE REVISED

DIST	COUNTY	ROUTE	KILOMETER POST TOTAL PROJECT	SHEET No	TOTAL SHEETS
04	SF	80	13.2/13.9	175 R1	1204

12/19/02
REGISTERED ELECTRICAL ENGINEER DATE

12-6-04
PLANS APPROVAL DATE

REGISTERED PROFESSIONAL ENGINEER JENS ERLINGSSON No. C54338 Exp. 12/31/03 ELECTRICAL STATE OF CALIFORNIA

PB POWER, Inc.
A Parsons Brinckerhoff Company
303 Second St., Suite 700N
San Francisco, CA 94107-1317

The State of California or its officers or agents shall not be responsible for the accuracy or completeness of electronic copies of this plan sheet.

Caltrans now has a web site! To get to the web site, go to http://www.dot.ca.gov

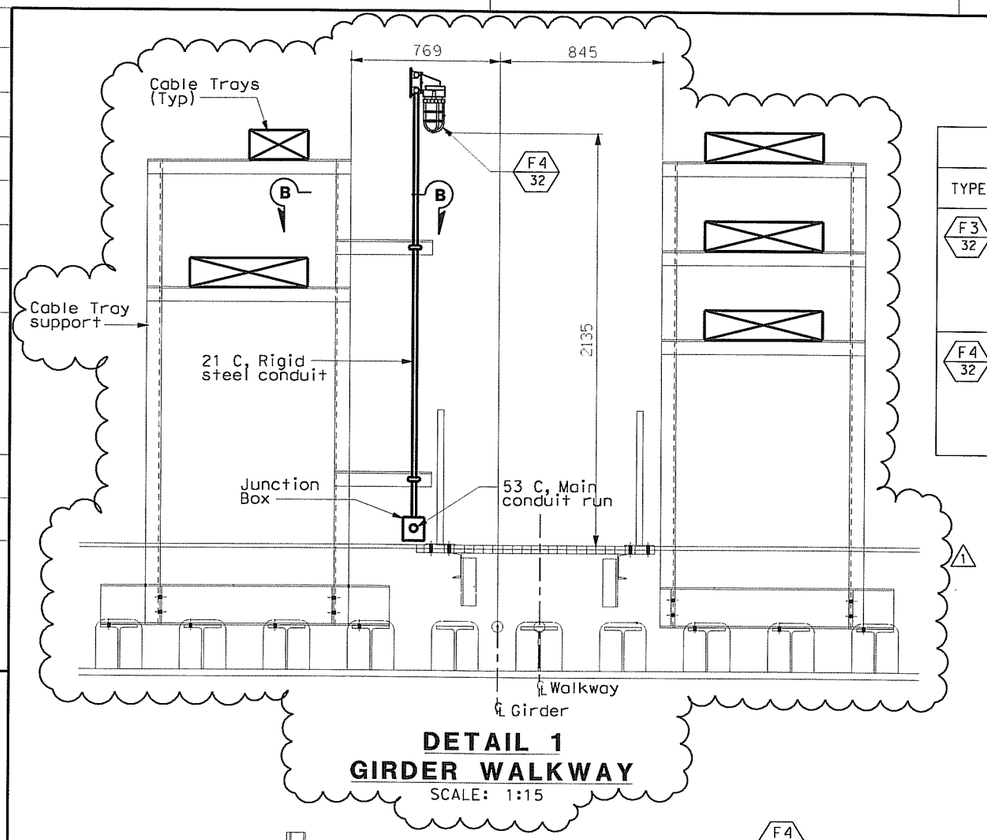

DETAIL 1
GIRDER WALKWAY
SCALE: 1:15

LIGHTING FIXTURE SCHEDULE

TYPE	INPUT VOLT-AMP	DESCRIPTION	REMARKS
F3 / 32	41	Compact fluorescent fixture, non metallic vaportight housing with guard and clear glass globe, U.L. listed for wet and marine environment, 120 VAC, high frequency ballast and (1) 32 watt CFM32/GX24Q lamp. Suitable for wall mounting.	
F4 / 32	41	Compact fluorescent fixture, non metallic vaportight housing with guard and clear glass globe, U.L. listed for wet and marine environment, 120 VAC, high frequency ballast and (1) 32 watt CFM32/GX24Q lamp. Suitable for stanchion mounting.	

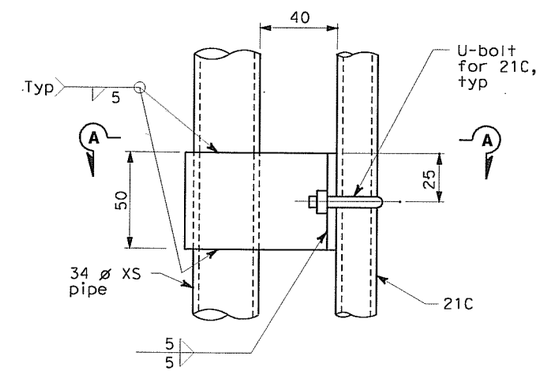

DETAIL 4
NO SCALE

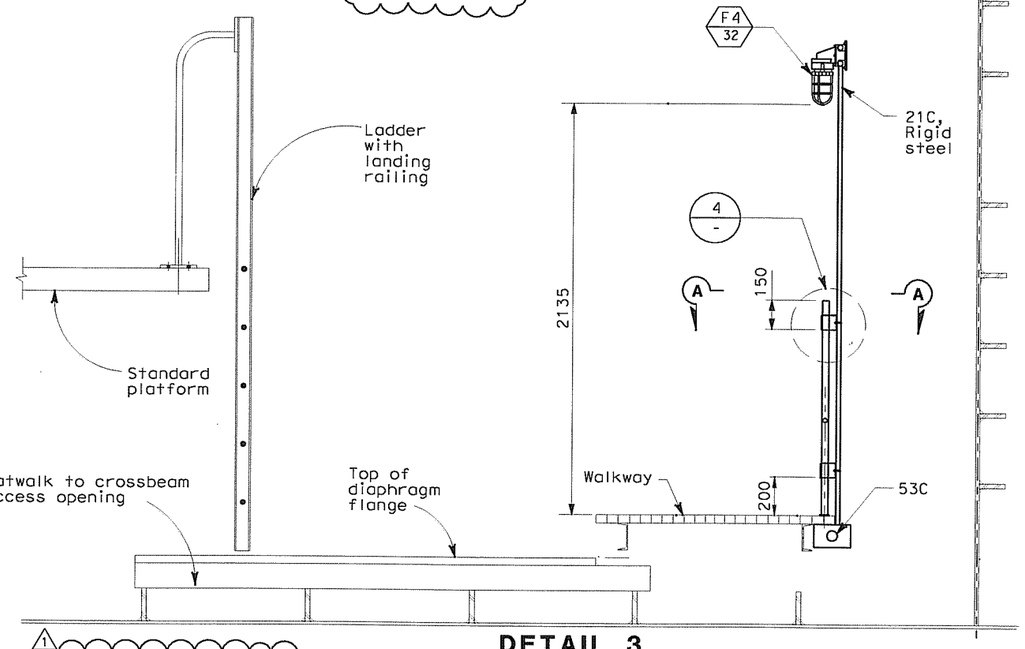

DETAIL 3
CROSSBEAM WALKWAY LIGHTING STANCHION MOUNTED
SCALE: 1:15

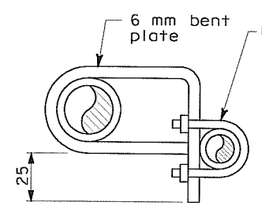

SECTION A-A
NO SCALE

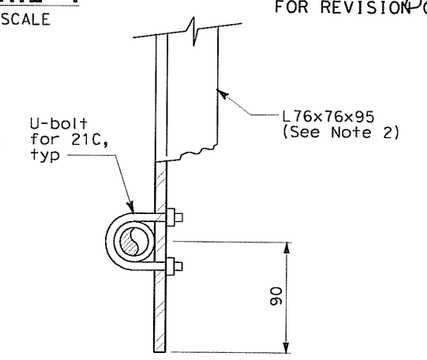

SECTION B-B
NO SCALE

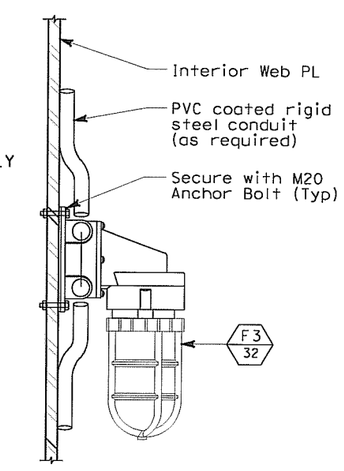

DETAIL 2
ACCESS LIGHTING WALL MOUNTED
NO SCALE

Caltrans Metric

NOTES:

1. Fittings and mounting hardware shall be stainless steel. For additional requirements, see Electrical Special Provisions.
2. For stanchion mounted light support detail on ~~cable tray~~ support structure, see sheet AS-11. 1

REQUEST FOR INFORMATION NOT ADDRESSED IN THIS CCO REMAIN IN FORCE

MARK	DATE	DESCRIPTIONS	BY	CH'D	CCO#
1	02/25/08	CABLE TRAY CHANGES	TW	RG SE	42S1

REVISIONS

CONTRACT CHANGE ORDER NO. _____
SHEET _____ OF _____

REGISTERED PROFESSIONAL ENGINEER S. A. ESTOQUE, JR. No. E-10151 Exp. 12/31/2008 ELECTRICAL STATE OF CALIFORNIA

FOR REVISION ONLY

DETAILS
SAS SUPERSTRUCTURE GIRDER WESTBOUND TYPICAL LIGHTING INSTALLATION
SCALE AS NOTED

ALL DIMENSIONS ARE IN MILLIMETERS UNLESS OTHERWISE SHOWN

THIS PLAN IS ACCURATE FOR ELECTRICAL WORK ONLY.

E-123

CALCULATED/ DESIGNED BY	FK 08/02	REVISED BY	IAH
CHECKED BY	IAH 08/02	DATE REVISED	03/04

DESIGN OVERSIGHT: Bob Zandipour

STATE OF CALIFORNIA - DEPARTMENT OF TRANSPORTATION
Caltrans

LAST REVISION 00-00-00
DATE PLOTTED => 7/11/2008
TIME PLOTTED => 2:44:08 PM

FOR REDUCED PLANS ORIGINAL SCALE IS IN MILLIMETERS 0 20 40 60 80

DGN FILE =>T:\13103\MS\pse\SAS Struc\CCO\SAS CCO42S1\CCO 42S1 Final Submittal 2008-07-11\04-0120f1_0175R01.dgn
USERNAME =>llorico
CU 04251 EA 0120F1

DIST	COUNTY	ROUTE	KILOMETER POST TOTAL PROJECT	SHEET No	TOTAL SHEETS
04	SF	80	13.2/13.9	176 R1	1204

REGISTERED ELECTRICAL ENGINEER 12/19/02 DATE

12/6/04
PLANS APPROVAL DATE

REGISTERED PROFESSIONAL ENGINEER JENS ERLINGSSON No. 8249 Exp. 9/30/06 ELECTRICAL STATE OF CALIFORNIA

PB POWER, Inc.
A Parsons Brinckerhoff Company
303 Second St., Suite 700N
San Francisco, CA 94107-1317

The State of California or its officers or agents shall not be responsible for the accuracy or completeness of electronic copies of this plan sheet.

To get to the web site, go to: http://www.dot.ca.gov

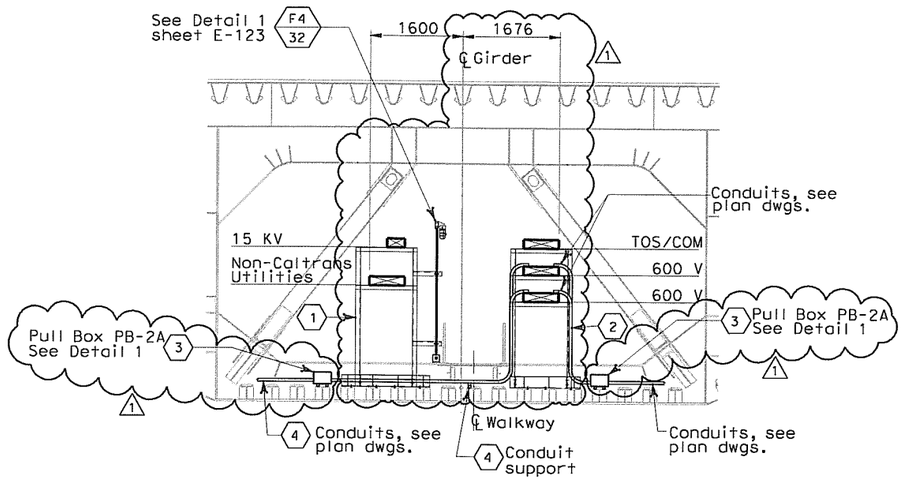

DETAIL-TYPICAL CABLE TRAY SUPPORT AND PULL BOX LOCATION

SECTION A-A

SCALE 1:50
(E-96, E-124A, E-124B)

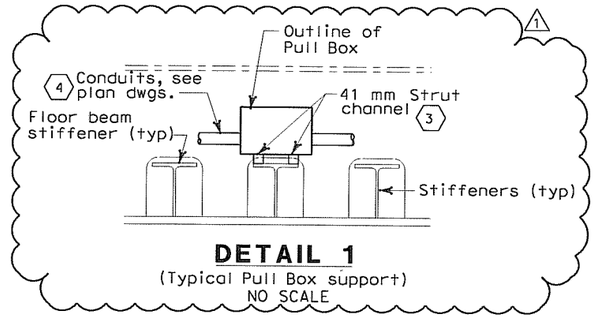

DETAIL 1

(Typical Pull Box support)
NO SCALE

REGISTERED PROFESSIONAL ENGINEER S. A. ESTODUE, JR. No. E-10151 Exp. 12/31/2008 ELECTRICAL STATE OF CALIFORNIA

FOR REVISION ONLY

REQUEST FOR INFORMATION NOT ADDRESSED IN THIS CCO REMAIN IN FORCE

MARK	DATE	DESCRIPTIONS	BY	CH'D	CCO#
1	02/25/08	CABLE TRAY CHANGES	TW	RG SE	42S1

REVISIONS

CONTRACT CHANGE ORDER NO. _____
SHEET _____ OF _____

SHEET NOTES:

1. Type I, for cable tray supports details, see AS sheets.
2. Type II, for cable tray supports details, see AS sheets.
3. Pull Box PB-2A shall be located on top of stiffener. The Contractor shall provide strut channel for support installed in field.
4. The Contractor shall install in the field strut channel on top of stiffener for conduit support.

1

1

DETAILS
SAS SUPERSTRUCTURE GIRDER WESTBOUND TYPICAL TRAY AND CONDUIT INSTALLATION

SCALE AS NOTED

E-124

CALCULATED/DESIGNED BY	FK 08/02
CHECKED BY	IAH 08/02
REVISED BY	IAH
DATE REVISED	3/04
DESIGN OVERSIGHT	BEHZAD GOLEMOHAMMADI

STATE OF CALIFORNIA - DEPARTMENT OF TRANSPORTATION
Caltrans

THIS PLAN ACCURATE FOR ELECTRICAL WORK ONLY.

ALL DIMENSIONS ARE IN MILLIMETERS UNLESS OTHERWISE SHOWN

FOR REDUCED PLANS ORIGINAL SCALE IS IN MILLIMETERS 0 20 40 60 80

DGN FILE =>T:\13103\MS\pse\SAS Struc\CCO\SAS CCO42S1\CCO 42S1 Final Submittal 2008-07-11\04-0120f1_0176R01.dgn
USERNAME =>llorico

CU 04251 | EA 0120F1

LAST REVISION 00-00-00
DATE PLOTTED => 7/11/2008
TIME PLOTTED => 2:44:24 PM

DIST	COUNTY	ROUTE	KILOMETER POST TOTAL PROJECT	SHEET No	TOTAL SHEETS
04	SF	80	13.2/13.9	176 S1	1204

REGISTERED ELECTRICAL ENGINEER — DATE 2/22/08

REGISTERED PROFESSIONAL ENGINEER S. A. ESTOQUE, JR. No. E-10151 Exp. 12/31/2008 STATE OF CALIFORNIA

PLANS APPROVAL DATE

PB AMERICAS, Inc.
A Parsons Brinckerhoff Company
303 Second St., Suite 700N
San Francisco, CA 94107-1317

The State of California or its officers or agents shall not be responsible for the accuracy or completeness of electronic copies of this plan sheet.

Caltrans now has a web site! To get to the web site, go to http://www.dot.ca.gov

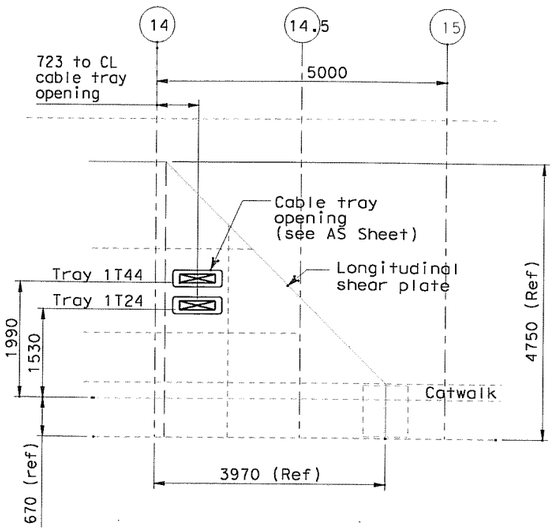

DETAIL 1

Cable penetration thru longitudinal shear plate
Scale 1:50

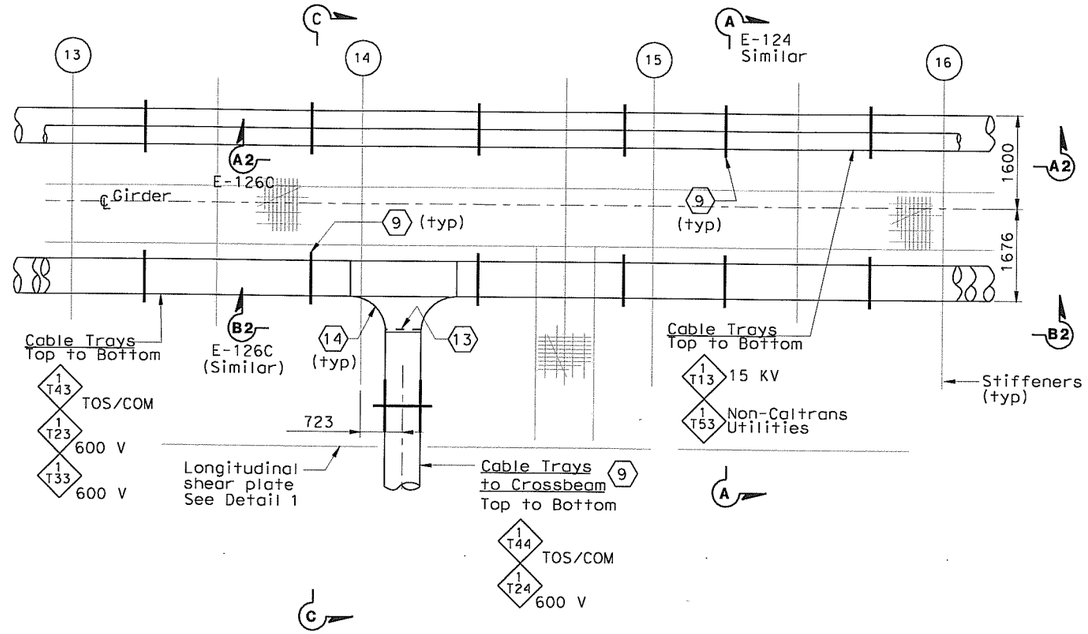

PLAN- CABLE TRAY AT PP-14

Scale 1:50

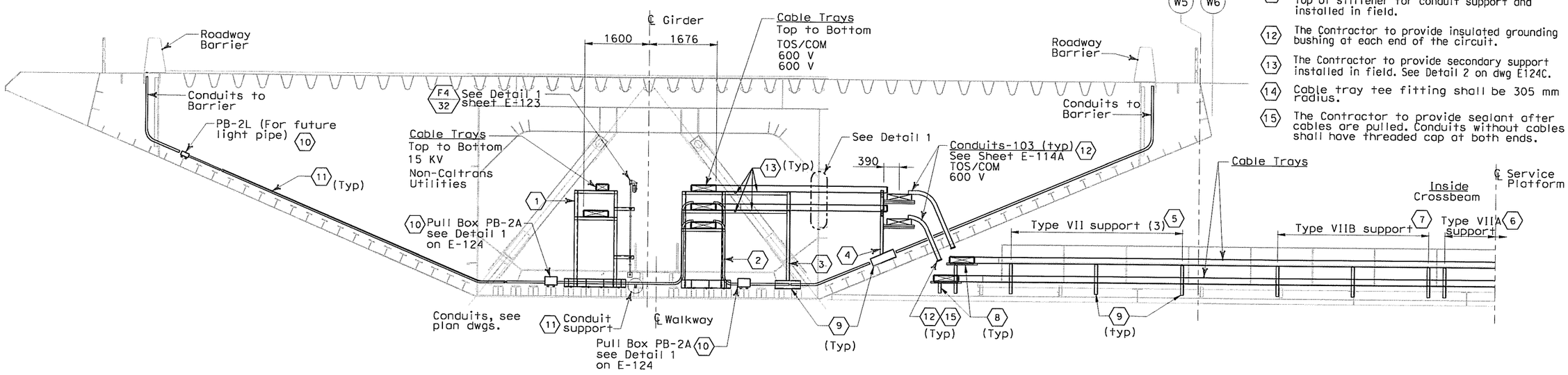

SECTION C - C

(Cable Tray and Support to Crossbeam Panel Point PP-14)
Scale 1:50

SHEET NOTES:

1. Type I, for cable tray supports details, see AS sheets.
2. Type II, for cable tray supports details, see AS sheets.
3. Type V, for cable tray supports details, see AS sheets.
4. Type VI, for cable tray supports details, see AS sheets.
5. Type VII, for cable tray supports details, see AS sheets.
6. Type VIIA, for cable tray supports details, see AS sheets.
7. Type VIIB, for cable tray supports details, see AS sheets.
8. The Contractor to provide cable tray support at each ends of cable tray fitting as required.
9. For cable tray support see AS-Sheets.
10. Pull Box PB-2A and PB-2L shall be located on top of stiffener. The Contractor shall provide strut channel for support installed in field.
11. The Contractor shall provide strut channel on top of stiffener for conduit support and installed in field.
12. The Contractor to provide insulated grounding bushing at each end of the circuit.
13. The Contractor to provide secondary support installed in field. See Detail 2 on dwg E124C.
14. Cable tray tee fitting shall be 305 mm radius.
15. The Contractor to provide sealant after cables are pulled. Conduits without cables shall have threaded cap at both ends.

REQUEST FOR INFORMATION NOT ADDRESSED IN THIS CCO REMAIN IN FORCE					
0	02/25/08	CABLE TRAY CHANGES	TW	RG SE	42S1
MARK	DATE	DESCRIPTIONS	BY	CH'D	CCO#
REVISIONS					

CONTRACT CHANGE ORDER NO. _____
SHEET _____ OF _____

THIS PLAN IS ACCURATE FOR ELECTRICAL WORK ONLY.

ALL DIMENSIONS ARE IN MILLIMETERS UNLESS OTHERWISE SHOWN

FOR REDUCED PLANS ORIGINAL SCALE IS IN MILLIMETERS 0 20 40 60 80

DETAILS
SAS SUPERSTRUCTURE GIRDER WESTBOUND TYPICAL TRAY AND CONDUIT INSTALLATION

SCALE AS NOTED

E-124A

STATE OF CALIFORNIA - DEPARTMENT OF TRANSPORTATION
Caltrans

DESIGN OVERSIGHT: BEHZAD GOLEMOHAMMADI
CALCULATED/DESIGNED BY | CHECKED BY | REVISED BY | DATE REVISED | DATE

LAST REVISION 00-00-00
DATE PLOTTED => 7/11/2008
TIME PLOTTED => 2:44:48 PM

DGN FILE =>T:\13103\MS\pse\SAS Struc\CCO\SAS CCO42S1\CCO 42S1 Final Submittal 2008-07-11\04-0120f1_0176S01.dgn
USERNAME =>llorico

CU 04251 | EA 0120F1

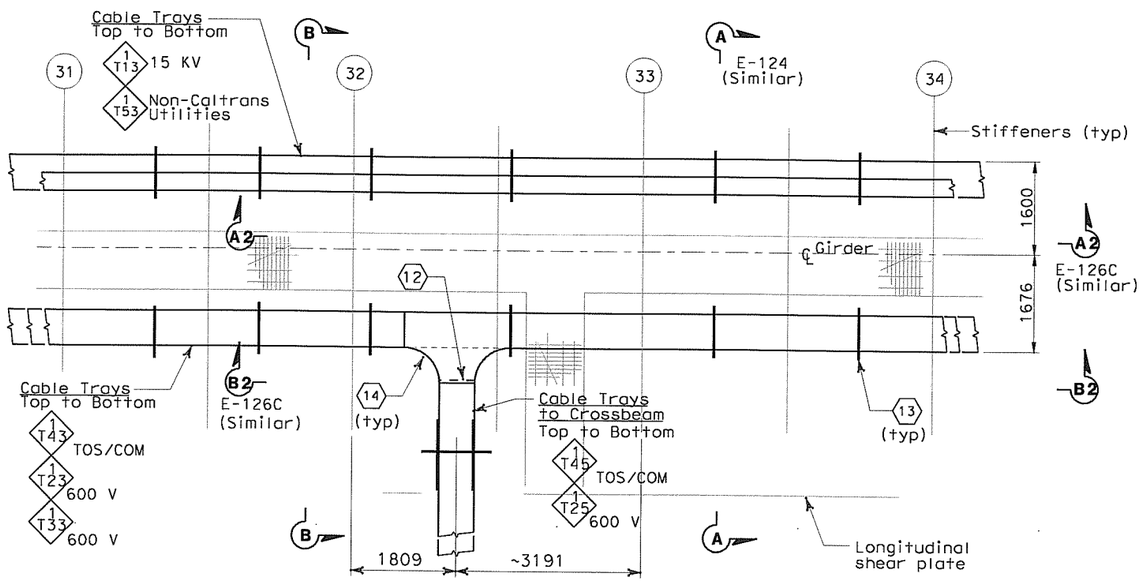

PLAN- CABLE TRAY AT PP 32

(SIMILAR FOR LOCATION AT PP 50, PP80 and PP-110)
SCALE 1:50

SHEET NOTES:

1. Type I, for cable tray supports details, see AS sheets.
2. Type II, for cable tray supports details, see AS sheets.
3. Type V, for cable tray supports details, see AS sheets.
4. Type VI, for cable tray supports details, see AS sheets.
5. Type VII, for cable tray supports details, see AS sheets.
6. Type VIIA, for cable tray supports details, see AS sheets.
7. Type VIIB, for cable tray supports details, see AS sheets.
8. The Contractor to provide cable tray support at each ends of cable tray fitting as required.
9. Pull Box PB-2A and PB-2L shall be located on top of stiffener. The Contractor shall provide strut channel for support installed in field.
10. The Contractor shall provide strut channel on top of stiffener for conduit support and installed in field.
11. The Contractor to provide grounding bushing at each end of the conduit.
12. The Contractor to provide suitable secondary tray support installed in field. See Detail 3 on drawing E-124C.
13. For cable tray support see AS-Sheets.
14. Cable tray tee fitting shall have 305 mm radius.

Caltrans Metric

DIST	COUNTY	ROUTE	KILOMETER POST TOTAL PROJECT	SHEET No	TOTAL SHEETS
04	SF	80	13.2/13.9	176 S2	1204

REGISTERED ELECTRICAL ENGINEER 2/22/08 DATE

PLANS APPROVAL DATE

REGISTERED PROFESSIONAL ENGINEER S. A. ESTOQUE, JR No. E-10151 Exp. 12/31/2008 ELECTRICAL STATE OF CALIFORNIA

PB AMERICAS, Inc.
A Parsons Brinckerhoff Company
303 Second St., Suite 700N
San Francisco, CA 94107-1317

The State of California or its officers or agents shall not be responsible for the accuracy or completeness of electronic copies of this plan sheet.

Caltrans now has a web site! To get to the web site, go to http://www.dot.ca.gov

REQUEST FOR INFORMATION NOT ADDRESSED IN THIS CCO REMAIN IN FORCE

MARK	DATE	DESCRIPTIONS	BY	CH'D	CCO#
0	02/25/08	CABLE TRAY CHANGES	TW	RG SE	42S1

REVISIONS

CONTRACT CHANGE ORDER NO. _____
SHEET _____ OF _____

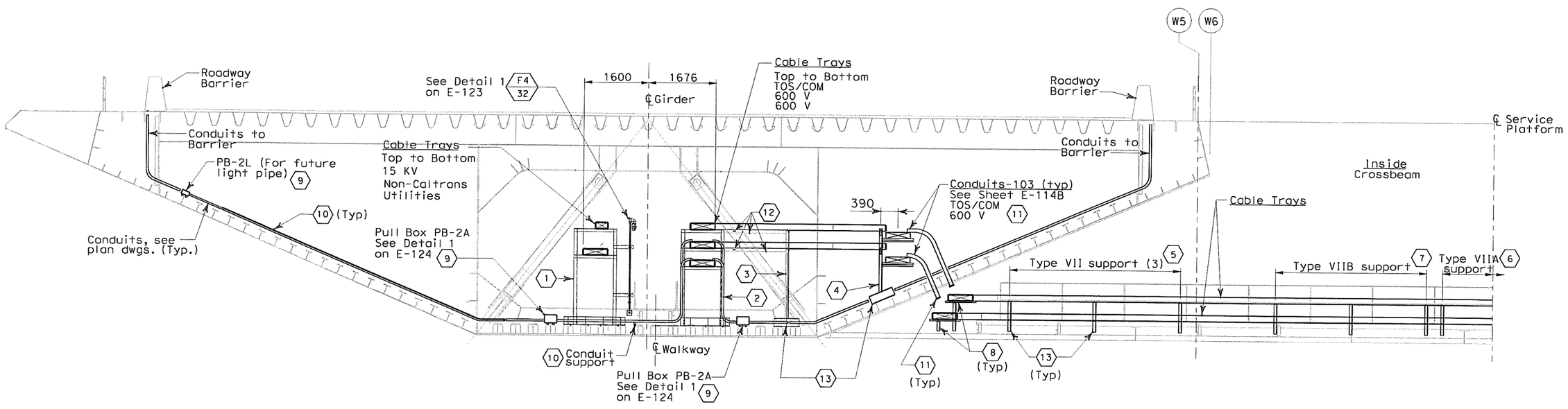

SECTION B-B

(TYPICAL CABLE TRAY AND SUPPORT TO CROSSBEAM
PP-32, PP-50, PP-80 AND PP-110)
SCALE 1:50

DETAILS
SAS SUPERSTRUCTURE GIRDER WESTBOUND TYPICAL TRAY AND CONDUIT INSTALLATION

SCALE AS NOTED

THIS PLAN IS ACCURATE FOR ELECTRICAL WORK ONLY.

ALL DIMENSIONS ARE IN MILLIMETERS UNLESS OTHERWISE SHOWN

E-124B

STATE OF CALIFORNIA - DEPARTMENT OF TRANSPORTATION
Caltrans

DESIGN OVERSIGHT: BEHZAD GOLEMOHAMMADI

CALCULATED/DESIGNED BY	FK	DATE 08/02	REVISED BY	IAH
CHECKED BY	IAH	08/02	DATE REVISED	3/04

FOR REDUCED PLANS ORIGINAL SCALE IS IN MILLIMETERS 0 20 40 60 80

DGN FILE =>T:\13103\MS\pse\SAS Struc\CCO\SAS CCO42S1\CCO 42S1 Final Submittal 2008-07-11\04-0120f1_0176S02.dgn
USERNAME =>llorico

CU 04251 EA 0120F1

LAST REVISION 00-00-00
DATE PLOTTED => 7/11/2008
TIME PLOTTED => 2:45:08 PM

DIST	COUNTY	ROUTE	KILOMETER POST TOTAL PROJECT	SHEET No	TOTAL SHEETS
04	SF	80	13.2/13.9	176 S3	1204

REGISTERED ELECTRICAL ENGINEER 2/22/08 DATE

PLANS APPROVAL DATE

REGISTERED PROFESSIONAL ENGINEER S. A. ESTOQUE, JR. No. E-10151 Exp. 12/31/2008 ELECTRICAL STATE OF CALIFORNIA

PB AMERICAS, Inc.
A Parsons Brinckerhoff Company
303 Second St., Suite 700N
San Francisco, CA 94107-1317

The State of California or its officers or agents shall not be responsible for the accuracy or completeness of electronic copies of this plan sheet.

Caltrans now has a web site! To get to the web site, go to http://www.dot.ca.gov

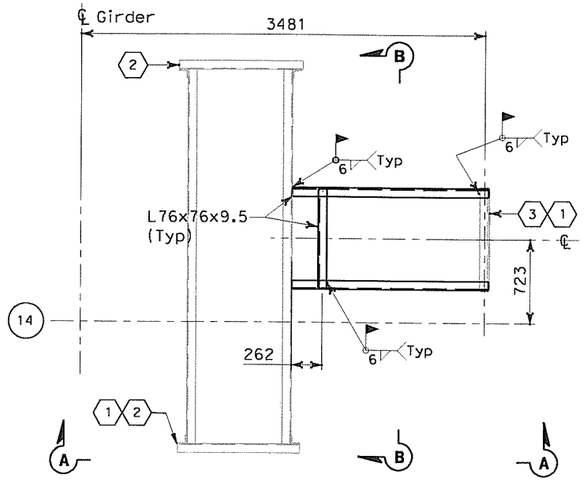

DETAIL 2
(Field Cable tray Support to Crossbeam PP-14)
Scale 1:50

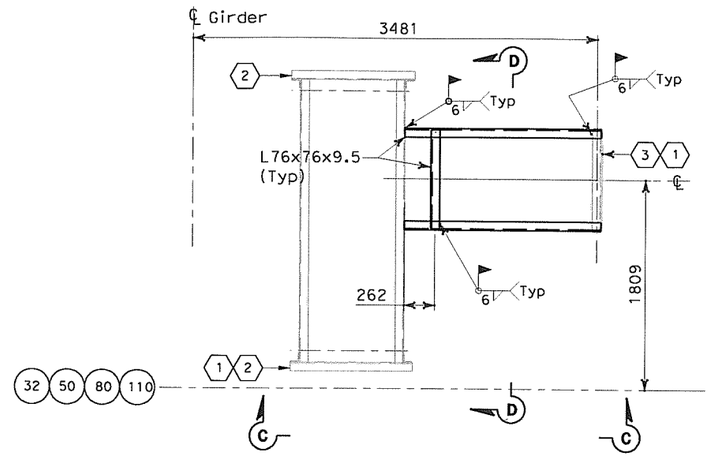

DETAIL 3
(Typical Field Cable tray Support to Crossbeam PP-32, PP-50, PP-80 and PP-110)
Scale 1:50

SHEET NOTES:

1. For cable tray support see AS-16K, AS-16L, AS-16M, AS-16N AND AS-16P.
2. Type II, for cable tray supports details, see AS-11.
3. Type V, for cable tray supports details, see AS-14.

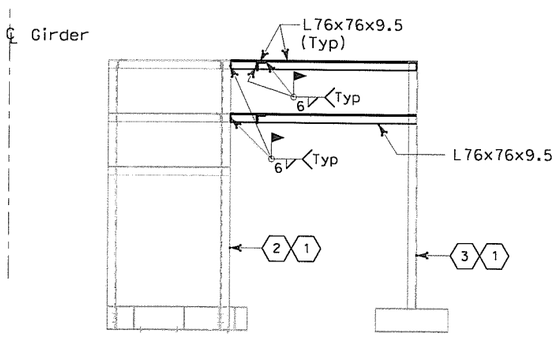

SECTION A-A
Scale 1:50

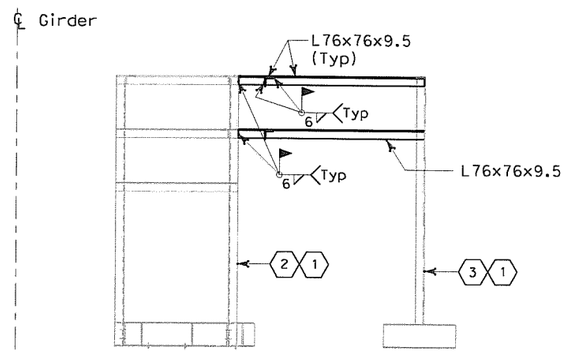

SECTION C-C
Scale 1:50

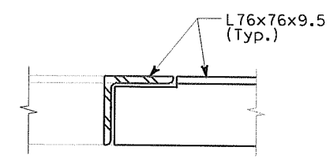

DETAIL 4
No Scale

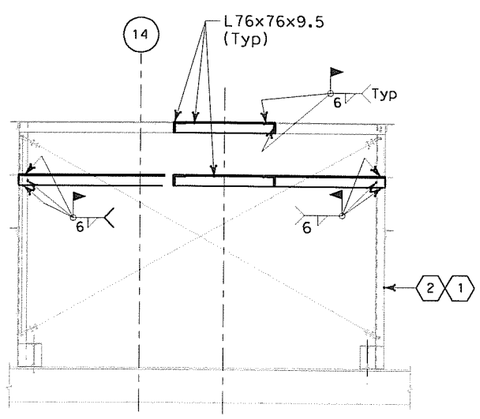

SECTION B-B
Scale 1:50

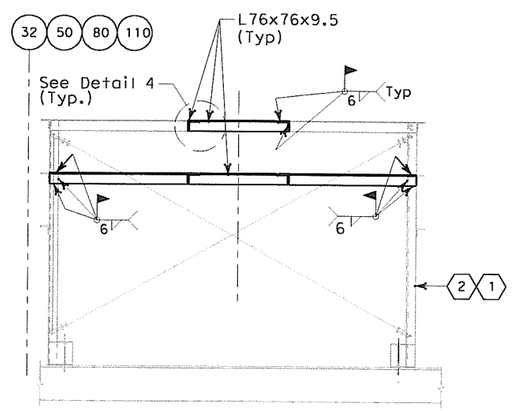

SECTION D-D
Scale 1:50

REQUEST FOR INFORMATION NOT ADDRESSED IN THIS CCO REMAIN IN FORCE					
D	02/25/08	CABLE TRAY CHANGES	TW	RG SE	42S1
MARK	DATE	DESCRIPTIONS	BY	CH'D	CCO#
REVISIONS					

CONTRACT CHANGE ORDER NO. _____
SHEET _____ OF _____

DETAILS
SAS SUPERSTRUCTURE GIRDER WESTBOUND TYPICAL TRAY AND CONDUIT INSTALLATION
SCALE AS NOTED

E-124C

THIS PLAN ACCURATE FOR ELECTRICAL WORK ONLY.

ALL DIMENSIONS ARE IN MILLIMETERS UNLESS OTHERWISE SHOWN

FOR REDUCED PLANS ORIGINAL SCALE IS IN MILLIMETERS 0 20 40 60 80

DGN FILE =>T:\13103\MS\pse\SAS Struc\CCO\SAS CCO42S1\CCO 42S1 Final Submittal 2008-07-11\04-0120f1_0176S03.dgn
USERNAME =>llorico

CU 04251 | EA 0120F1

LAST REVISION 00-00-00 | DATE PLOTTED => 7/11/2008 TIME PLOTTED => 2:45:37 PM

STATE OF CALIFORNIA - DEPARTMENT OF TRANSPORTATION
Caltrans

DESIGN OVERSIGHT
BEHZAD GOLEMOHAMMADI

CALCULATED/DESIGNED BY | CHECKED BY | DATE | REVISED BY | DATE REVISED

DIST	COUNTY	ROUTE	KILOMETER POST TOTAL PROJECT	SHEET No	TOTAL SHEETS
04	SF	80	13.2/13.9	177 R1	1204

Caltrans Metric

REGISTERED ELECTRICAL ENGINEER 12/19/02 DATE

12-6-04
PLANS APPROVAL DATE

REGISTERED PROFESSIONAL ENGINEER JENS ERLINGSSON No. 8249 Exp. 9/30/06 ELECTRICAL STATE OF CALIFORNIA

PB POWER, Inc.
A Parsons Brinckerhoff Company
303 Second St., Suite 700N
San Francisco, CA 94107-1317

The State of California or its officers or agents shall not be responsible for the accuracy or completeness of electronic copies of this plan sheet.

Caltrans now has a web site! To get to the web site, go to http://www.dot.ca.gov

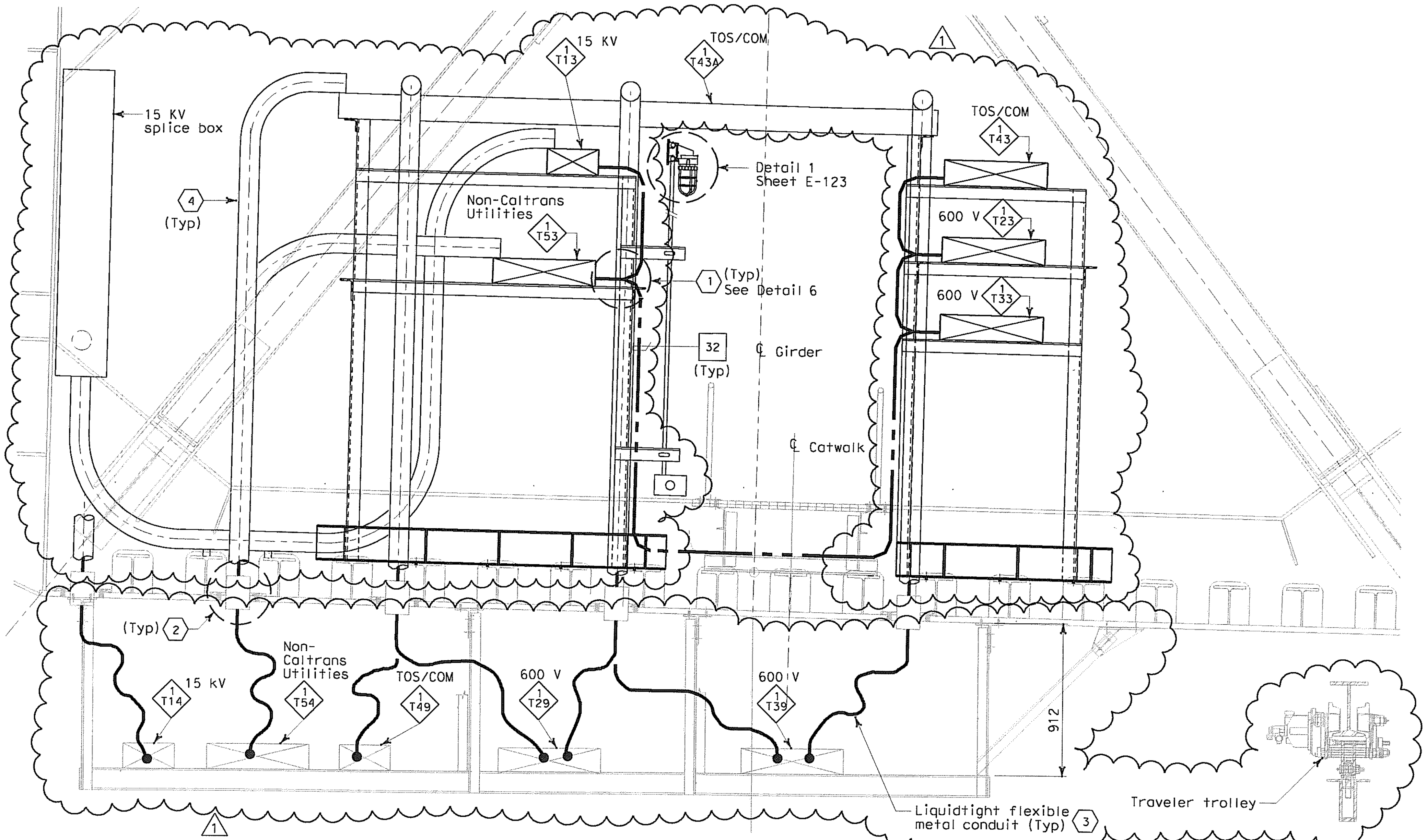

SECTION E-E - TYPICAL CABLE TRAY SUPPORT

SCALE: 1:15

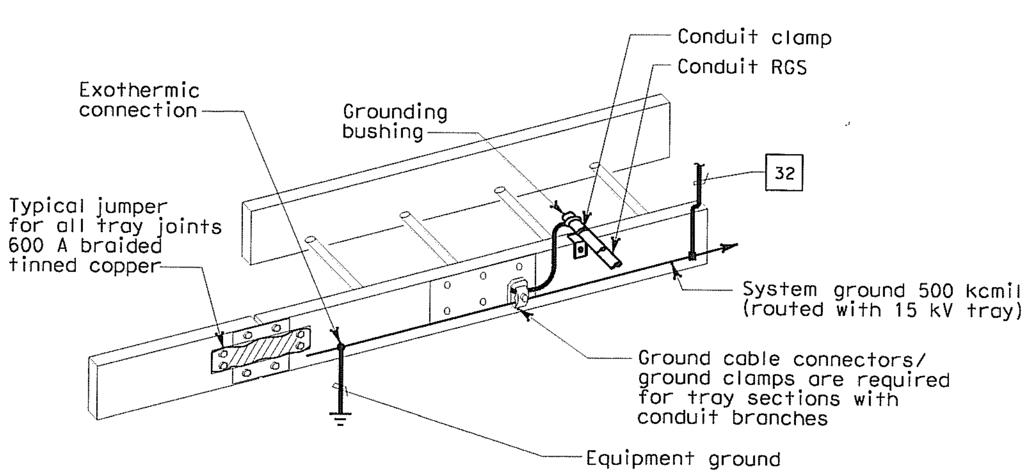

GROUNDING OF METALLIC RACEWAYS

DETAIL 6

NO SCALE

SHEET NOTES:

1. Provide connections to 500 kcmil system ground for all cable trays, every 200 meters.
2. For location of conduit penetrations thru girder plate, see Utility Detail No. 1 and Utility Layout sheets respectively. To prevent moisture from passing inside the sleeve, Contractor shall install sealant after conduit have been installed. Spares shall be plugged and capped.
3. For installation detail of liquidtight flexible metal conduits below girder, see sheet E-126.
4. For installation detail of conduits inside girder, see sheet E-126B.

△1

NOTES:

1. See structural drawings for Catwalk Support Details.
2. For SAS Superstructure Girder access detail #2, see structural dwgs.
3. ~~Ground cable shall be~~ installed along full length of the 15 kV cable tray only. △1
4. For typical cable tray support details, see AS-sheets.

REGISTERED PROFESSIONAL ENGINEER S. A. ESTOQUE, JR. No. E-10151 Exp. 12/31/2008 ELECTRICAL STATE OF CALIFORNIA

FOR REVISION ONLY

REQUEST FOR INFORMATION NOT ADDRESSED IN THIS CCO REMAIN IN FORCE

MARK	DATE	DESCRIPTIONS	BY	CH'D	CCO#
△1	02/25/08	CABLE TRAY CHANGES	RG	SE	42S1

REVISIONS

CONTRACT CHANGE ORDER NO.______
SHEET _____ OF _____

DETAILS
SAS SUPERSTRUCTURE GIRDER WESTBOUND TYPICAL TRAY AND GROUNDING INSTALLATION

NO SCALE

E-125

DESIGN OVERSIGHT	BEHZAD GOLEMOHAMMADI
CALCULATED/DESIGNED BY	FK
CHECKED BY	IAH
DATE	08/02
DATE	08/02
REVISED BY	IAH
DATE REVISED	3/04

STATE OF CALIFORNIA - DEPARTMENT OF TRANSPORTATION
Caltrans

THIS PLAN ACCURATE FOR ELECTRICAL WORK ONLY.

ALL DIMENSIONS ARE IN MILLIMETERS UNLESS OTHERWISE SHOWN

FOR REDUCED PLANS ORIGINAL SCALE IS IN MILLIMETERS 0 20 40 60 80

DGN FILE =>T:\13103\MS\pse\SAS Struc\CCO\SAS CCO42S1\CCO 42S1 Final Submittal 2008-07-11\04-0120f1_0177R01.dgn
USERNAME =>garciar

CU 04251
EA 0120F1

LAST REVISION 00-00-00
DATE PLOTTED => 8/27/2008
TIME PLOTTED => 2:47:56 PM

DIST	COUNTY	ROUTE	KILOMETER POST TOTAL PROJECT	SHEET NO.	TOTAL SHEETS
04	SF	80	13.2/13.9	178 R1	1204

REGISTERED ELECTRICAL ENGINEER 12/19/02 DATE

12-6-04
PLANS APPROVAL DATE

REGISTERED PROFESSIONAL ENGINEER JENS ERLINGSSON No. 8249 Exp. 9/30/06 ELECTRICAL STATE OF CALIFORNIA

PB POWER, Inc.
A Parsons Brinckerhoff Company
303 Second St., Suite 700N
San Francisco, CA 94107-1317

The State of California or its officers or agents shall not be responsible for the accuracy or completeness of electronic copies of this plan sheet.

Caltrans now has a web site! To get to the web site, go to http://www.dot.ca.gov

Caltrans Metric

CABLE TRAY SUPPORT SCHEDULE

Item	Type	Detail Sheet	Item	Type	Detail Sheet
1	VA	E-122	6	1	AS-7
2	VB	E-122	7	2	AS-7
3	VC	E-122	8	3	AS-7
4	VD	E-122	9	4	AS-7
5	VE	E-122A	10	5	AS-7

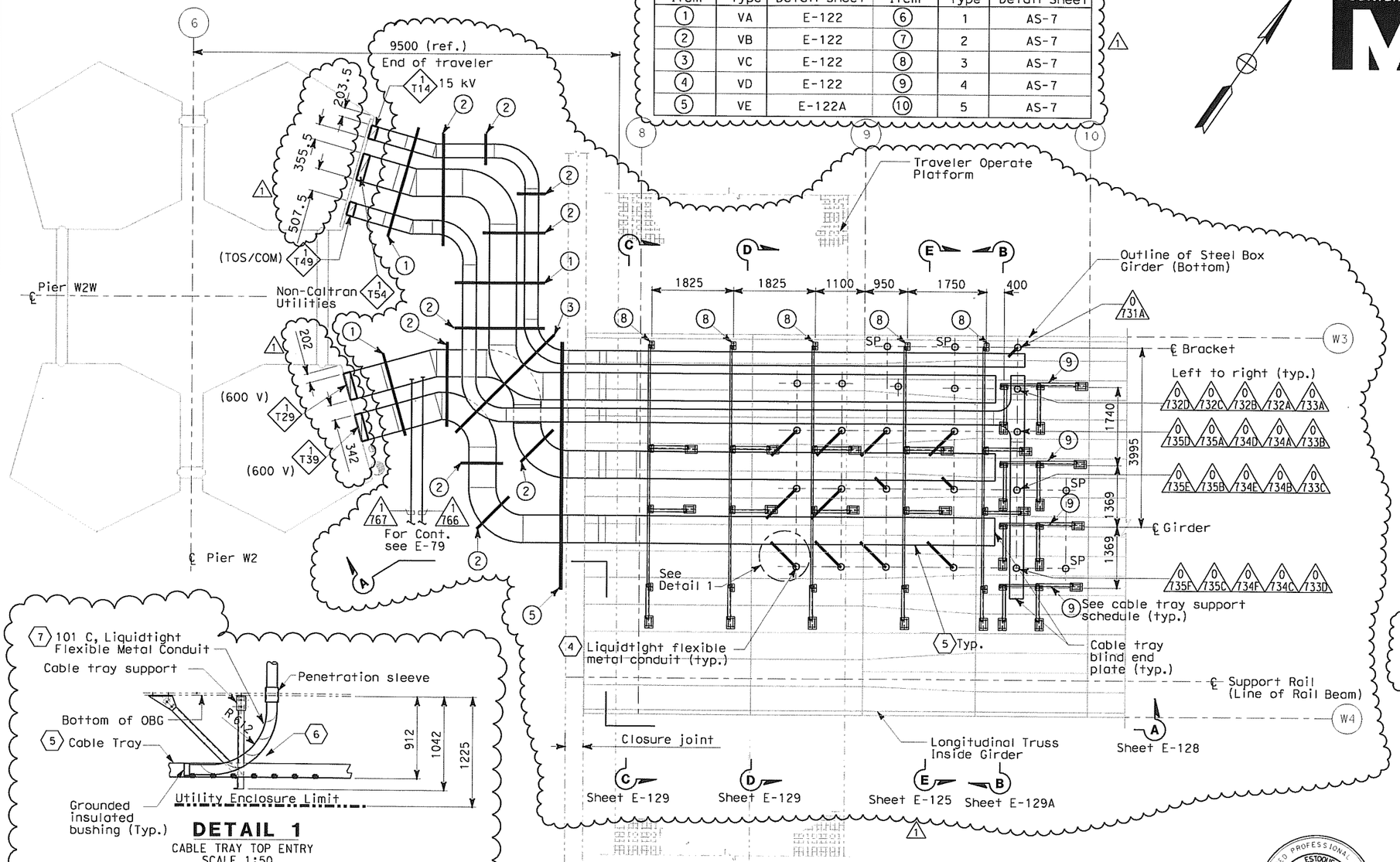

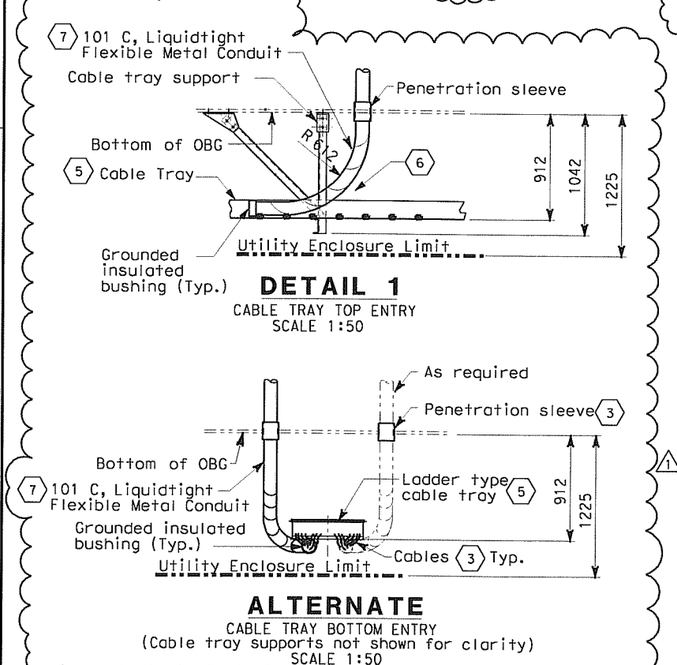

DETAIL 1
CABLE TRAY TOP ENTRY
SCALE 1:50

ALTERNATE
CABLE TRAY BOTTOM ENTRY
(Cable tray supports not shown for clarity)
SCALE 1:50

THIS PLAN ACCURATE FOR ELECTRICAL WORK ONLY.

SHEET NOTES:

1. For cable tray supports details, see Cable Tray Support Schedule table.
2. Cable trays shall be as specified per specification unless noted otherwise.
3. Cable and location of penetrations thru girder plate, see Utility Detail No. 1 and Utility Layout respectively of Superstructure and Tower Drawings. To prevent moisture from entering girder, contractor to seal the space between sleeves and conduit. Spare pipe sleeves shall be provided with threaded cap at exterior end.
4. For continuation of conduit to cable trays inside OBG see E-126A.
5. Cable trays shall be anchored to supports and shall have solid cover with heavy duty cover clamps.
6. Install neoprene rubber around cable tray cover opening for protection to liquidtight flexible metal conduits as it enter the cable tray. Seal opening as needed.
7. Liquidtight flexible metal conduits shall be anchored to supports or cable trays.
8. Contractor may adjust the location of cable tray supports below W2 Pier Cap Beam to suit field condition and provide additional seismic bracing as required.

NOTES:

1. References:
   - For circuit and conduit/cable tray schedules, see sheets starting at E-401.
   - For locations of cable tray support embeds, see AS sheets.
2. For other related work, not shown on this sheet, see Electrical Special Provisions.
3. For actual conduit locations, see girder level, cable tray and conduits plans. See sheets E-96 thru E-101.
4. For cable tray support, embedded unistrut, and cable tray locations are shown in scaled locations.

REGISTERED PROFESSIONAL ENGINEER S. A. ESTOQUE, JR. No. E-10151 Exp. 12/31/2008 ELECTRICAL STATE OF CALIFORNIA

FOR REVISION ONLY

REQUEST FOR INFORMATION NOT ADDRESSED IN THIS CCO REMAIN IN FORCE

MARK	DATE	DESCRIPTIONS	BY	CH'D	CCO#
1	02/25/08	CABLE TRAY CHANGES	RG	SE	42S1

REVISIONS

CONTRACT CHANGE ORDER NO. _____
SHEET ____ OF ____

PARTIAL GIRDER PLAN
CABLE TRAY LAYOUT
SCALE 1:50

DETAILS
SAS SUPERSTRUCTURE GIRDER WESTBOUND
TYPICAL TRAY AND CONDUIT INSTALLATION AT PIER W2W
SCALE AS NOTED

ALL DIMENSIONS ARE IN MILLIMETERS UNLESS OTHERWISE SHOWN

E-126

CALCULATED/ DESIGNED BY	DATE 08/02	REVISED BY	DATE REVISED
FK			
CHECKED BY	IAH 08/02		

DESIGN OVERSIGHT
BEHZAD GOLEMOHAMMADI

STATE OF CALIFORNIA - DEPARTMENT OF TRANSPORTATION
Caltrans

LAST REVISION 00-00-00
DATE PLOTTED => 7/11/2008
TIME PLOTTED => 2:46:36 PM

FOR REDUCED PLANS ORIGINAL SCALE IS IN MILLIMETERS 0 20 40 60 80

DGN FILE =>T:\13103\MS\pse\SAS Struc\CCO\SAS CCO42S1\CCO 42S1 Final Submittal 2008-07-11\04-0120f1_0178R01.dgn
USERNAME =>llorico

CU 04251 | EA 0120F1

DIST	COUNTY	ROUTE	KILOMETER POST TOTAL PROJECT	SHEET No	TOTAL SHEETS
04	SF	80	13.2/13.9	178 S1	1204

REGISTERED ELECTRICAL ENGINEER DATE 2/22/08

REGISTERED PROFESSIONAL ENGINEER S. A. ESTOOLE, JR. No. E-10151 Exp. 12/31/2008 ELECTRICAL STATE OF CALIFORNIA

PLANS APPROVAL DATE

PB AMERICAS, Inc.
A Parsons Brinckerhoff Company
303 Second St., Suite 700N
San Francisco, CA 94107-1317

The State of California or its officers or agents shall not be responsible for the accuracy or completeness of electronic copies of this plan sheet.

Caltrans now has a web site! To get to the web site, go to http://www.dot.ca.gov

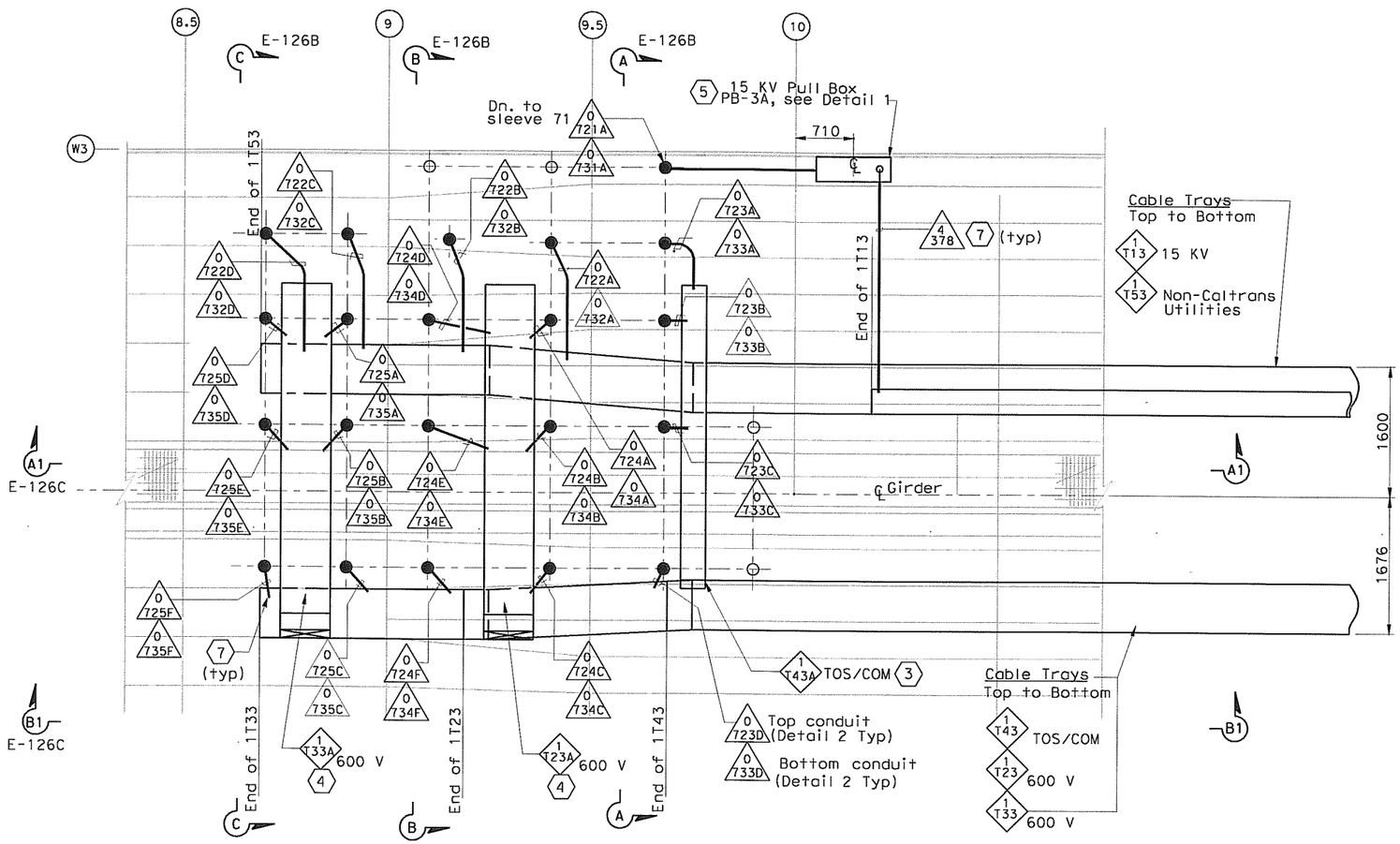

PARTIAL GIRDER CABLE TRAY-PLAN (6)

SCALE 1:150

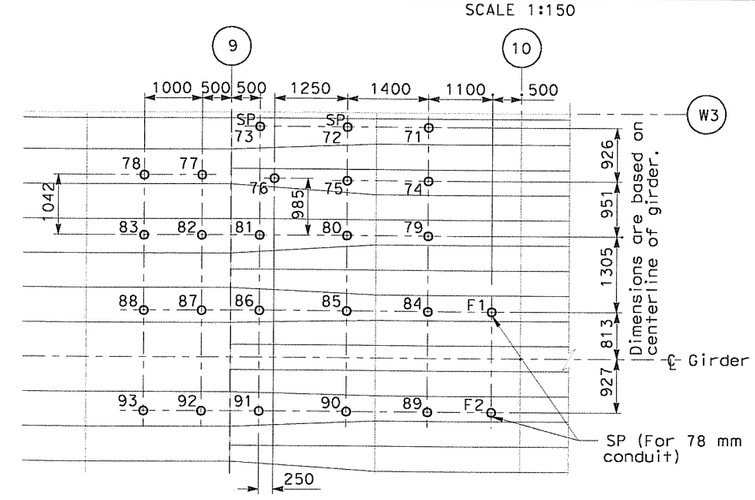

PIPE SLEEVE LOCATION-PLAN (6)

SCALE 1:100

THIS PLAN ACCURATE FOR ELECTRICAL WORK ONLY.

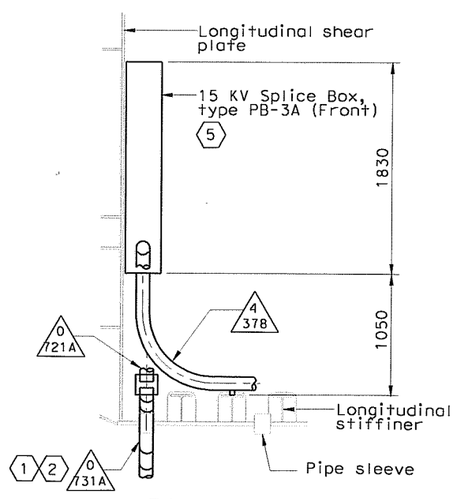

DETAIL 1

SCALE 1:50

THIS PLAN ACCURATE FOR ELECTRICAL WORK ONLY.

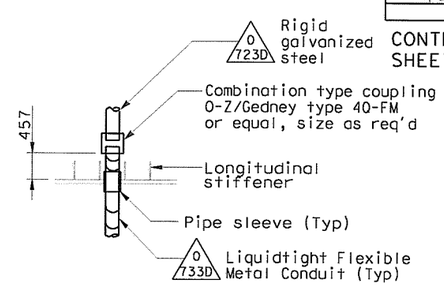

DETAIL 2

SCALE 1:50

SHEET NOTES:

1. To prevent moisture from entering girder. contractor to seal the space between sleeves and conduits.
2. Down to cable tray, for continuation see sheet E-126.
3. Provide drop out tray fitting.
4. Provided vertical bend segment type fitting. Fitting radius shall be 305mm.
5. 15 KV splice box is bolted to longitudinal shear plate and installed by field.
6. See table A sheet E-126B.
7. Provide insulated ground bushing at end of conduit.

NOTES:

1. References:
   - For circuit and conduit/cable tray schedules, see sheets starting at E-401.
2. (SP) Denotes spare pipe sleeve for future 103 mm conduit. Contractor to provide threaded cap at exterior end (Unless Otherwise Noted).
3. For cable tray supports details, see AS sheets.
4. Cable trays fittings shall be 610 radius.

REQUEST FOR INFORMATION NOT ADDRESSED IN THIS CCO REMAIN IN FORCE

MARK	DATE	DESCRIPTIONS	BY	CH'D	CCO#
0	02/25/08	CABLE TRAY CHANGES	TW	RG SE	42S1

REVISIONS

CONTRACT CHANGE ORDER NO. _____
SHEET _____ OF _____

DETAILS
SAS SUPERSTRUCTURE GIRDER WESTBOUND CABLE TRAY AND CONDUIT AT PIER W2W

SCALE AS NOTED

DESIGN OVERSIGHT	CALCULATED/DESIGNED BY	REVISED BY	DATE
BEHZAD GOLEMOHAMMADI	CHECKED BY	DATE REVISED	

STATE OF CALIFORNIA - DEPARTMENT OF TRANSPORTATION

Caltrans

FOR REDUCED PLANS ORIGINAL SCALE IS IN MILLIMETERS 0 20 40 60 80

DGN FILE =>T:\13103\MS\pse\SAS Struc\CCO\SAS CCO42S1\CCO 42S1 Final Submittal 2008-07-11\04-0120f1_0178S01.dgn
USERNAME =>llorico

CU 04251 | EA 0120F1

LAST REVISION 00-00-00 | DATE PLOTTED => 7/11/2008 TIME PLOTTED => 2:47:04 PM

E-126A

DIST	COUNTY	ROUTE	KILOMETER POST TOTAL PROJECT	SHEET No	TOTAL SHEETS
04	SF	80	13.2/13.9	178 S2	1204

REGISTERED ELECTRICAL ENGINEER 2/22/08 DATE

PLANS APPROVAL DATE

REGISTERED PROFESSIONAL ENGINEER Sy. A. ESTOQUE, JR. No. E-10151 Exp. 12/31/2008 ELECTRICAL STATE OF CALIFORNIA

PB AMERICAS, Inc.
A Parsons Brinckerhoff Company
303 Second St., Suite 700N
San Francisco, CA 94107-1317

The State of California or its officers or agents shall not be responsible for the accuracy or completeness of electronic copies of this plan sheet.

Caltrans now has a web site! To get to the web site, go to http://www.dot.ca.gov

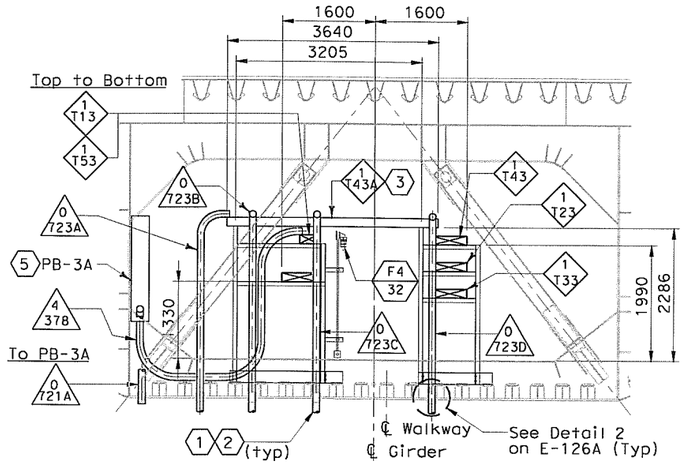

SECTION A-A
SCALE 1:100

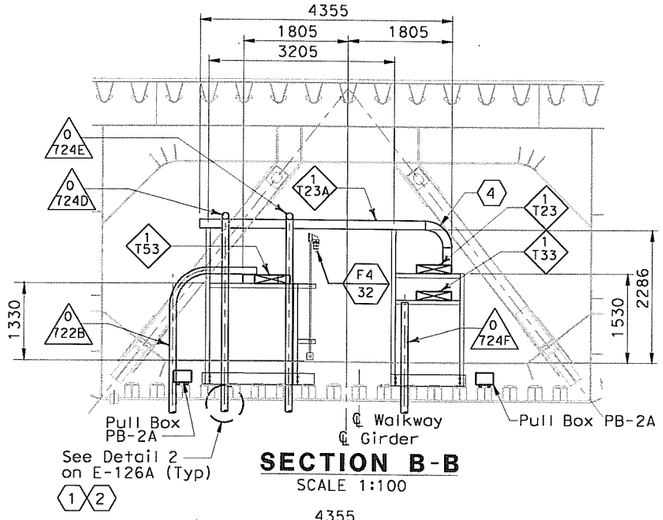

SECTION B-B
SCALE 1:100

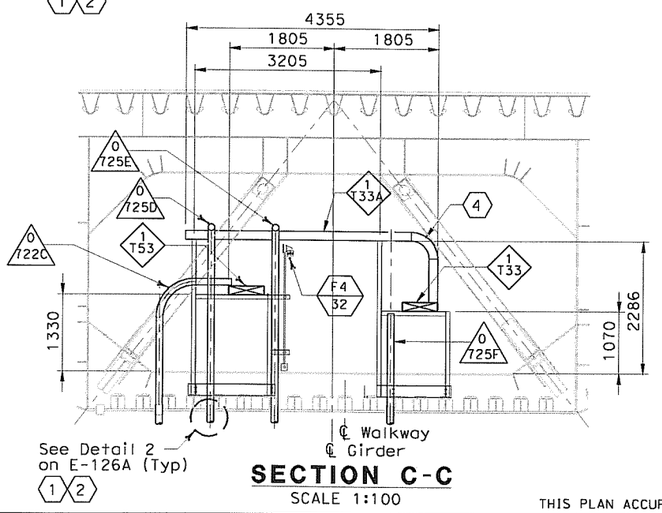

SECTION C-C
SCALE 1:100

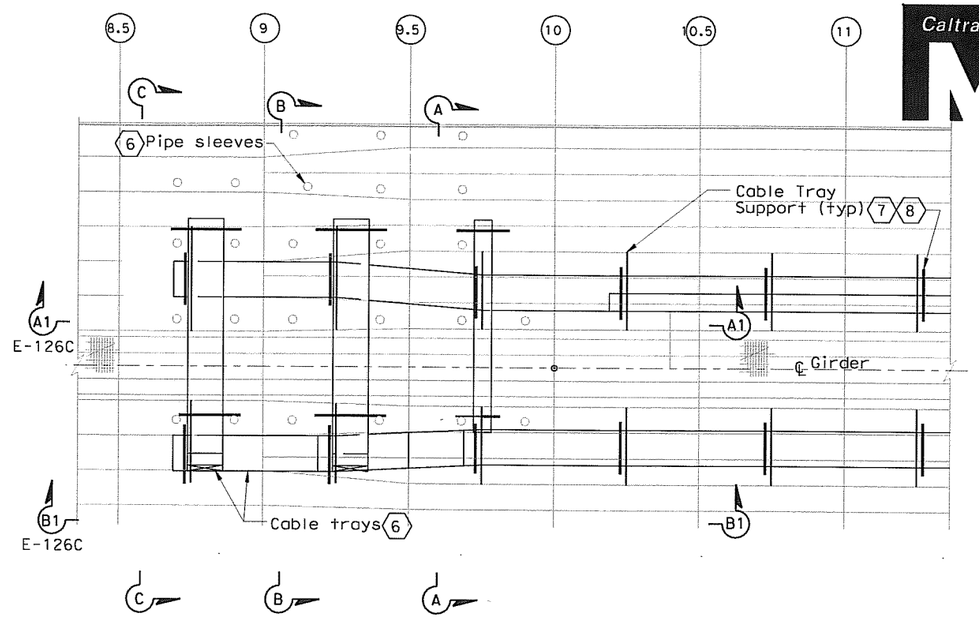

CABLE TRAY SUPPORT LOCATION-PLAN
SCALE 1:100

TABLE A (6)

Tray Number (Below Structure)	Conduit number Pipe Sleeve no. (Inside Girder)	Tray Number (Inside Girder)
1 T14 15 KV	0 721A, SP, SP 71 72 73	To PB-3A Pull Box
1 T54 Non-Caltrans Uitilities	0 722A, 0 72B, 0 722C, 0 722D 75 76 77 78	1 T53 Non-Caltrans Uitilities
1 T49 TOS/COM	0 723A, 0 723B, 0 723C, 0 723D 74 79 84 89	1 T43A TOS/COM
1 T29 600 V	0 724A, 0 724D, 0 725A, 0 725D, 0 724B, 0 724E 80 81 82 83 85 86	1 T23A 600 V
1 T39 600 V	0 725B, 0 725E, 0 724C, 0 724F, 0 725C, 0 725F 87 88 90 91 92 93	1 T33A, 1 T33 600 V
	-, - F1 F2	

SHEET NOTES:

(1) To prevent moisture from entering girder, Contractor to seal the space between sleeves and conduits.

(2) Down to cable tray, for details see sheet E-126.

(3) Provide drop out tray fitting.

(4) Provide vertical bend segment type fitting. Fitttting radius shall be 305 mm.

(5) 15 KV splice box is bolted to longitudinal shear plate and installed by field.

(6) For cable trays inside girder, pipe sleeves see sheet E-126A. The cable trays below W2 girder see sheet E-126.

(7) The Contractor to provide cable tray hold down clamps.

(8) For cable support see AS-16K

NOTES:

1. References:
   - For circuit and conduit/cable tray schedules, see sheets starting at E-401.
2. (SP) Denotes spare pipe sleeve for 103 mm conduit. Contractor to provided cap at exterior end (Unless Otherwise Noted).
3. For cable tray supports details, see AS sheets.
4. Cable trays fittings shall be 610 radius.

REQUEST FOR INFORMATION NOT ADDRESSED IN THIS CCO REMAIN IN FORCE

MARK	DATE	DESCRIPTIONS	BY	CH'D	CCO#
0	02/25/08	CABLE TRAY CHANGES	TW	RG SE	42S1

REVISIONS

CONTRACT CHANGE ORDER NO. _____
SHEET _____ OF _____

DETAILS
SAS SUPERSTRUCTURE GIRDER WESTBOUND CABLE TRAY AND CONDUIT AT PIER W2W
SCALE AS NOTED

THIS PLAN ACCURATE FOR ELECTRICAL WORK ONLY.

ALL DIMENSIONS ARE IN MILLIMETERS UNLESS OTHERWISE SHOWN

FOR REDUCED PLANS ORIGINAL SCALE IS IN MILLIMETERS 0 20 40 60 80

DGN FILE => T:\13103\MS\pse\SAS Struc\CCO\SAS CCO42S1\CCO 42S1 Final Submittal 2008-07-11\04-0120f1_0178S02.dgn
USERNAME => llorico

CU 04251 | EA 0120F1

E-126B

LAST REVISION 00-00-00 | DATE PLOTTED => 7/11/2008 TIME PLOTTED => 2:47:36 PM

STATE OF CALIFORNIA - DEPARTMENT OF TRANSPORTATION
Caltrans

DESIGN OVERSIGHT: BEHZAD GOLEMOHAMMADI

CALCULATED/DESIGNED BY | CHECKED BY | REVISED BY | DATE REVISED | DATE

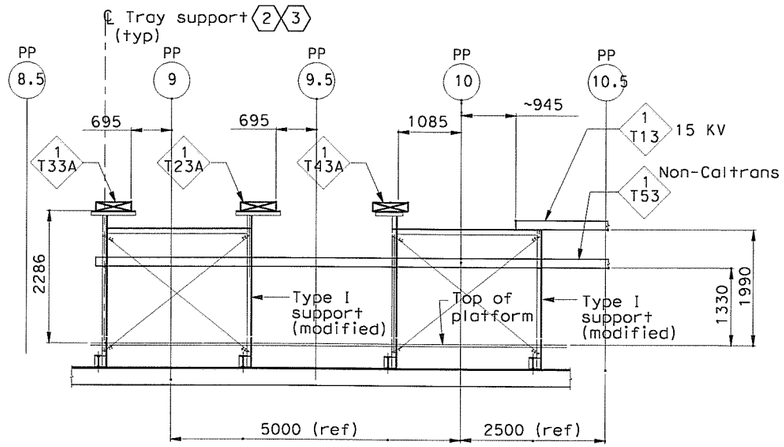

ELEVATION A1-A1

NORTH OF WB LINE PP 8.5 TO PP 10.5
SCALE 1:10

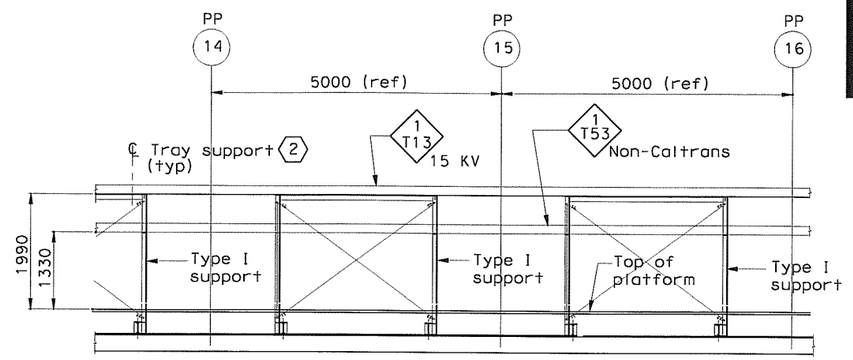

ELEVATION A2-A2

SHOWN STARTING AT PP 14
(TYPICAL CABLE TRAY SUPPORT)
SCALE 1:10

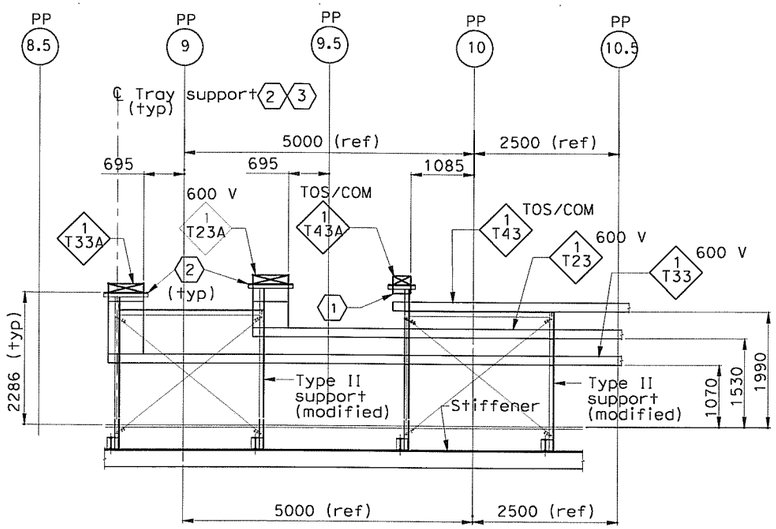

ELEVATION B1-B1

SOUTH OF WB LINE PP 8.5 TO PP 10.5
SCALE 1:10

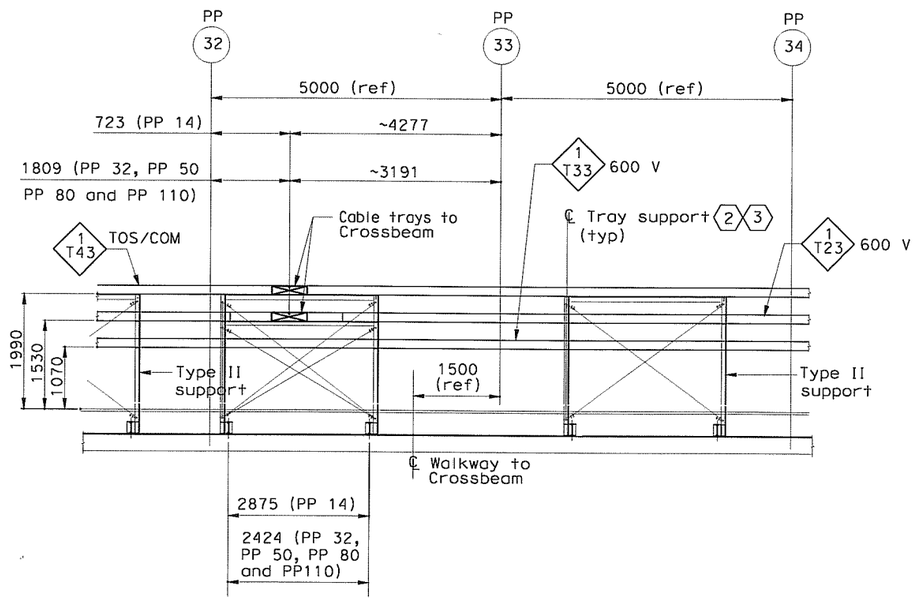

ELEVATION B2-B2

CABLE TRAY SUPPORT AT PP-32
(SIMILAR TO PP 14, PP 50, PP80 and PP110 EXCEPT AS NOTED)
SCALE 1:10

Caltrans Metric

DIST	COUNTY	ROUTE	KILOMETER POST TOTAL PROJECT	SHEET No.	TOTAL SHEETS
04	SF	80	13.2/13.9	178 S3	1204

REGISTERED ELECTRICAL ENGINEER DATE 2/22/08

PLANS APPROVAL DATE

REGISTERED PROFESSIONAL ENGINEER S. A. ESTOOLE, JR. No. E-10151 Exp. 12/31/2008 ELECTRICAL STATE OF CALIFORNIA

PB AMERICAS, Inc.
A Parsons Brinckerhoff Company
303 Second St., Suite 700N
San Francisco, CA 94107-1317

The State of California or its officers or agents shall not be responsible for the accuracy or completeness of electronic copies of this plan sheet.

Caltrans now has a web site! To get to the web site, go to http://www.dot.ca.gov

SHEET NOTES:

1. Provide drop out tray fitting.
2. The Contractor shall provide cable tray clamps at each location of tray support.
3. For cable tray support see AS-Sheets.

NOTES:

1. References:
   - For circuit and conduit/cable tray schedules, see sheets starting at E-401.
2. Conduits to cable trays not shown for clarity, see plan drawings.
3. For cable tray supports details, see AS sheets.
4. Cable trays fittings shall be 610 radius.

REQUEST FOR INFORMATION NOT ADDRESSED IN THIS CCO REMAIN IN FORCE

MARK	DATE	DESCRIPTIONS	BY	CH'D	CCO#
0	02/25/08	CABLE TRAY CHANGES	TW	RG SE	42S1

REVISIONS

CONTRACT CHANGE ORDER NO. _____
SHEET _____ OF _____

DETAILS
SAS SUPERSTRUCTURE GIRDER WESTBOUND CABLE TRAY AND CONDUIT AT PIER W2W

SCALE AS NOTED

E-126C

STATE OF CALIFORNIA - DEPARTMENT OF TRANSPORTATION
Caltrans

DESIGN OVERSIGHT: BEHZAD GOLEMOHAMMADI

CALCULATED/DESIGNED BY | CHECKED BY | DATE | REVISED BY | DATE REVISED

THIS PLAN ACCURATE FOR ELECTRICAL WORK ONLY.

ALL DIMENSIONS ARE IN MILLIMETERS UNLESS OTHERWISE SHOWN

FOR REDUCED PLANS ORIGINAL SCALE IS IN MILLIMETERS 0 20 40 60 80

DGN FILE =>T:\13103\MS\pse\SAS Struc\CCO\SAS CCO42S1\CCO 42S1 Final Submittal 2008-07-11\04-0120F1_0178S03.dgn
USERNAME =>llorico

CU 04251 | EA 0120F1

LAST REVISION 00-00-00 | DATE PLOTTED => 7/11/2008 | TIME PLOTTED => 2:47:56 PM

DIST	COUNTY	ROUTE	KILOMETER POST TOTAL PROJECT	SHEET No	TOTAL SHEETS
04	SF	80	13.2/13.9	179 R1	1204

Caltrans Metric

Jens Erlingsson 12/19/02
REGISTERED ELECTRICAL ENGINEER DATE

12-6-04
PLANS APPROVAL DATE

REGISTERED PROFESSIONAL ENGINEER JENS ERLINGSSON No. 8249 Exp. 9/30/06 ELECTRICAL STATE OF CALIFORNIA

PB POWER, Inc.
A Parsons Brinckerhoff Company
303 Second St., Suite 700N
San Francisco, CA 94107-1317

The State of California or its officers or agents shall not be responsible for the accuracy or completeness of electronic copies of this plan sheet.

Caltrans now has a web site! To get to the web site, go to http://www.dot.ca.gov

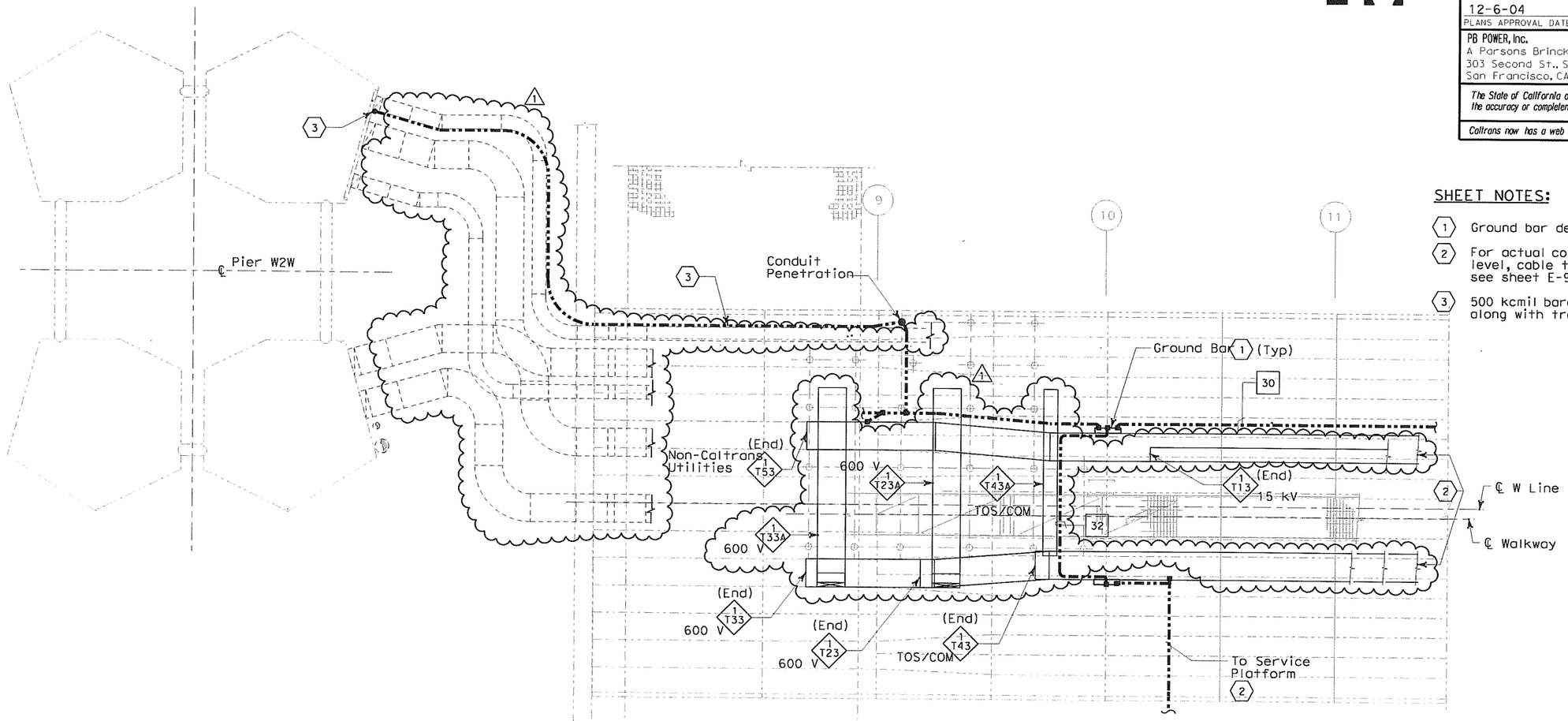

GIRDER PLAN - CABLE TRAY AND GROUNDING

SCALE 1:50

SHEET NOTES:

1. Ground bar detail see sheet E-125.
2. For actual conduit locations, see girder level, cable tray and conduits plans, see sheet E-96 thru E-101.
3. 500 kcmil bare copper ground cable run along with tray.

REGISTERED PROFESSIONAL ENGINEER S. A. ESTOQUE, JR. No. E-10151 Exp. 12/31/2008 ELECTRICAL STATE OF CALIFORNIA

FOR REVISION ONLY

REQUEST FOR INFORMATION NOT ADDRESSED IN THIS CCO REMAIN IN FORCE

MARK	DATE	DESCRIPTIONS	BY	CH'D	CCO#
1	02/25/08	CABLE TRAY CHANGES	RG	SE	42S1

REVISIONS

CONTRACT CHANGE ORDER NO. _____
SHEET _____ OF _____

DETAILS
SAS SUPERSTRUCTURE GIRDER WESTBOUND
TYPICAL TRAY AND GROUNDING INSTALLATION AT PIER W2W

SCALE AS NOTED

E-127

STATE OF CALIFORNIA - DEPARTMENT OF TRANSPORTATION
Caltrans

DESIGN OVERSIGHT: BEHZAD GOLEMOHAMMADI
CALCULATED/DESIGNED BY: FK | DATE: 08/02 | REVISED BY
CHECKED BY: IAH | 08/02 | DATE REVISED

THIS PLAN ACCURATE FOR ELECTRICAL WORK ONLY.

ALL DIMENSIONS ARE IN MILLIMETERS UNLESS OTHERWISE SHOWN

FOR REDUCED PLANS ORIGINAL SCALE IS IN MILLIMETERS 0 20 40 60 80

DGN FILE =>T:\13103\MS\pse\SAS Struc\CCO\SAS CCO42S1\CCO 42S1 Final Submittal 2008-07-11\04-0120f1_0179R01.dgn
USERNAME =>llorico

CU 04251 | EA 0120F1

LAST REVISION 00-00-00
DATE PLOTTED => 7/11/2008
TIME PLOTTED => 2:48:18 PM

DIST	COUNTY	ROUTE	KILOMETER POST TOTAL PROJECT	SHEET NO	TOTAL SHEETS
04	SF	80	13.2/13.9	180 R1	1204

REGISTERED ELECTRICAL ENGINEER 12/19/02 DATE

12-6-04
PLANS APPROVAL DATE

REGISTERED PROFESSIONAL ENGINEER JENS ERLINGSSON No. 8249 Exp. 9/30/06 ELECTRICAL STATE OF CALIFORNIA

PB POWER, Inc.
A Parsons Brinckerhoff Company
303 Second St., Suite 700N
San Francisco, CA 94107-1317

The State of California or its officers or agents shall not be responsible for the accuracy or completeness of electronic copies of this plan sheet.

Caltrans now has a web site! To get to the web site, go to: http://www.dot.ca.gov

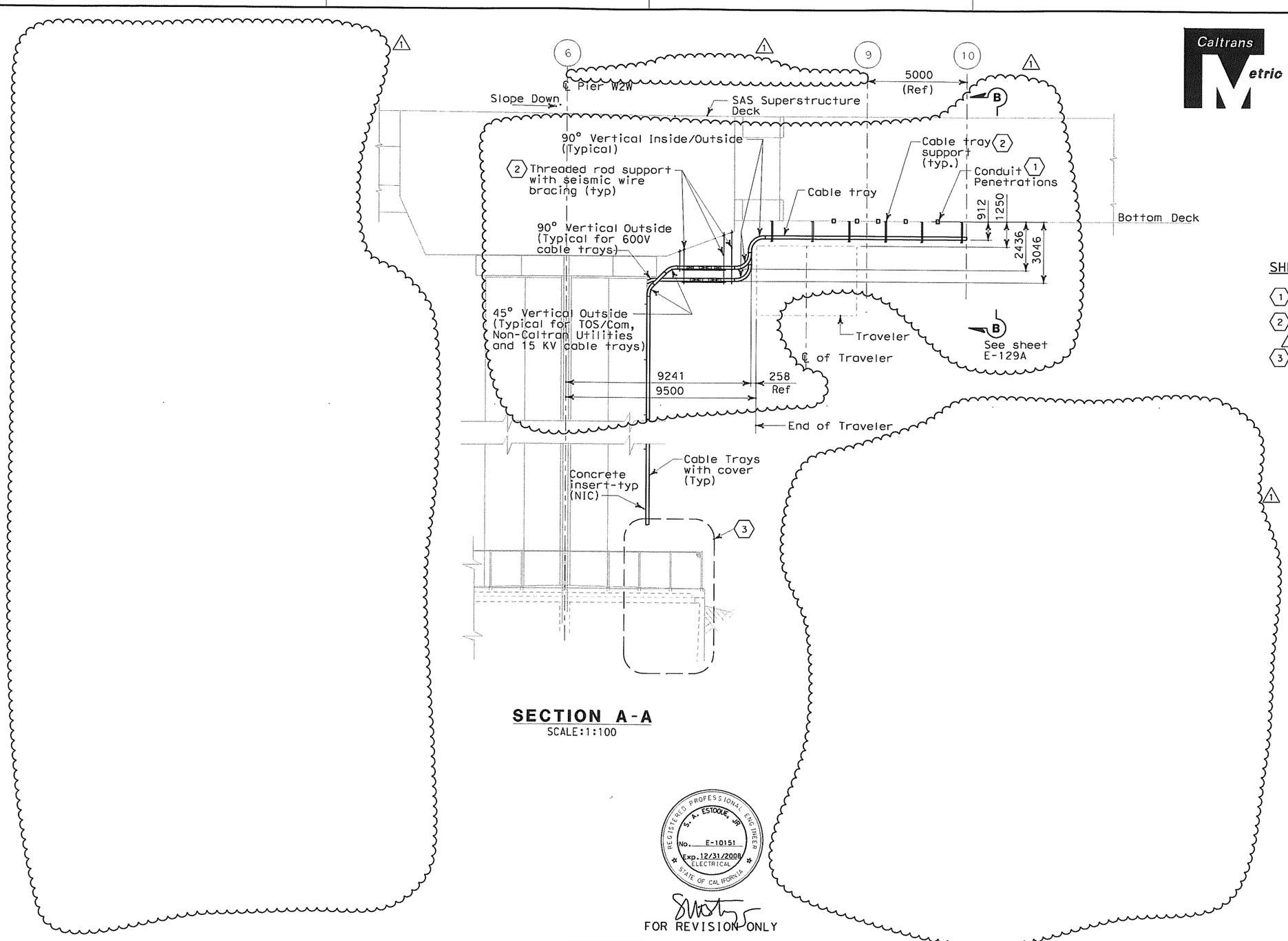

SECTION A-A
SCALE:1:100

SHEET NOTES:

1. See sheet E-126 for location.
2. For cable tray support type and location, see sheet E-126.
3. For Pier W2W details, see sheet E-20 through E-20F.

REGISTERED PROFESSIONAL ENGINEER S. A. ESTOOUE, JR. No. E-10151 Exp. 12/31/2008 ELECTRICAL STATE OF CALIFORNIA

FOR REVISION ONLY

REQUEST FOR INFORMATION NOT ADDRESSED IN THIS CCO REMAIN IN FORCE

MARK	DATE	DESCRIPTIONS	BY	CH'D	CCO#
1	02/25/08	CABLE TRAY CHANGES	RG	SE	42S1

REVISIONS

CONTRACT CHANGE ORDER NO. _____
SHEET _____ OF _____

DETAILS
SAS SUPERSTRUCTURE GIRDER WESTBOUND PIER W2W SECTION AND PLANS
SCALE AS NOTED

E-128

CALCULATED/DESIGNED BY	FK 08/02
CHECKED BY	IAH 08/02
REVISED BY	IAH
DATE REVISED	3/04

DESIGN OVERSIGHT
BEHZAD GOLEMOHAMMADI

STATE OF CALIFORNIA - DEPARTMENT OF TRANSPORTATION
Caltrans

THIS PLAN IS ACCURATE FOR ELECTRICAL WORK ONLY.

ALL DIMENSIONS ARE IN MILLIMETERS UNLESS OTHERWISE SHOWN

FOR REDUCED PLANS ORIGINAL SCALE IS IN MILLIMETERS 0 20 40 60 80

DGN FILE => T:\13103\MS\pse\SAS Struc\CCO\SAS CCO42S1\CCO 42S1 Final Submittal 2008-07-11\04-0120f1_0180R01.dgn
USERNAME => llorico

CU 04251 | EA 0120F1

LAST REVISION 00-00-00
DATE PLOTTED => 7/11/2008
TIME PLOTTED => 2:48:35 PM

DIST	COUNTY	ROUTE	KILOMETER POST TOTAL PROJECT	SHEET NO.	TOTAL SHEETS
04	SF	80	13.2/13.9	181 R1	1204

REGISTERED ELECTRICAL ENGINEER 12/19/02 DATE

12-6-04
PLANS APPROVAL DATE

REGISTERED PROFESSIONAL ENGINEER JENS ERLINGSSON No. 8249 Exp. 9/30/06 ELECTRICAL STATE OF CALIFORNIA

PB POWER, Inc.
A Parsons Brinckerhoff Company
303 Second St., Suite 700N
San Francisco, CA 94107-1317

The State of California or its officers or agents shall not be responsible for the accuracy or completeness of electronic copies of this plan sheet.

Caltrans now has a web site! To get to the web site, go to: http://www.dot.ca.gov

Caltrans Metric

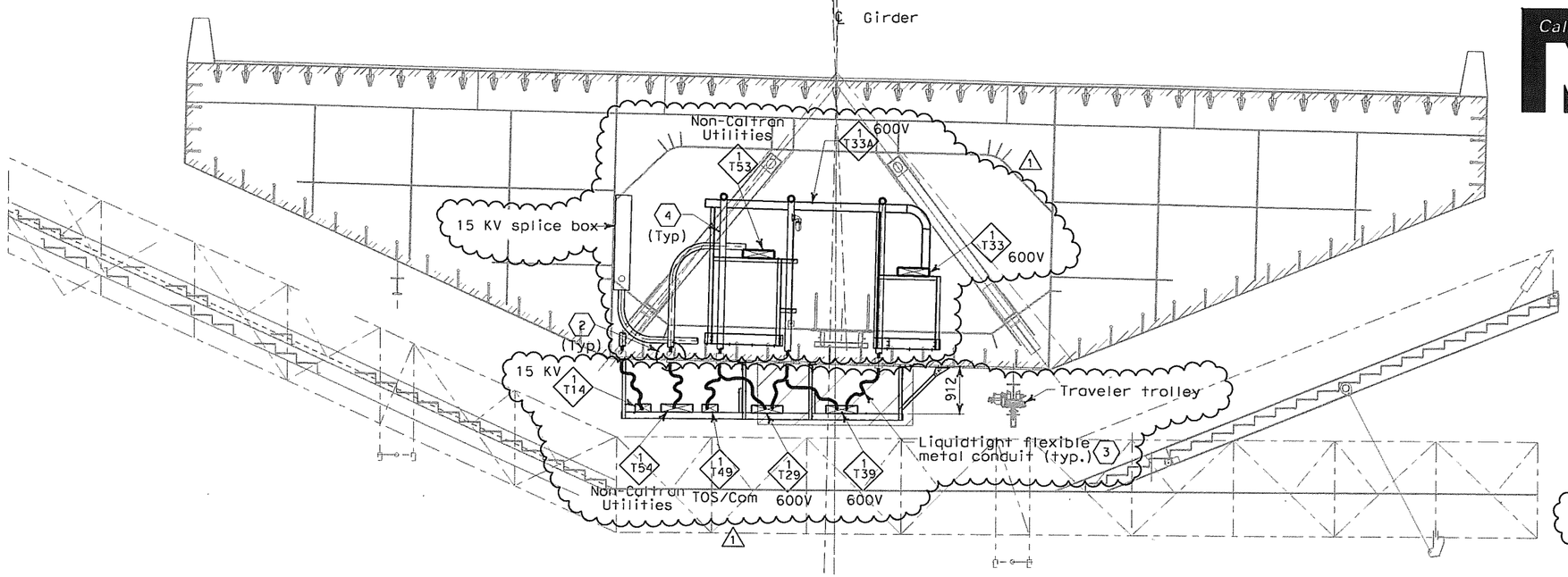

SECTION C-C
SCALE 1:50

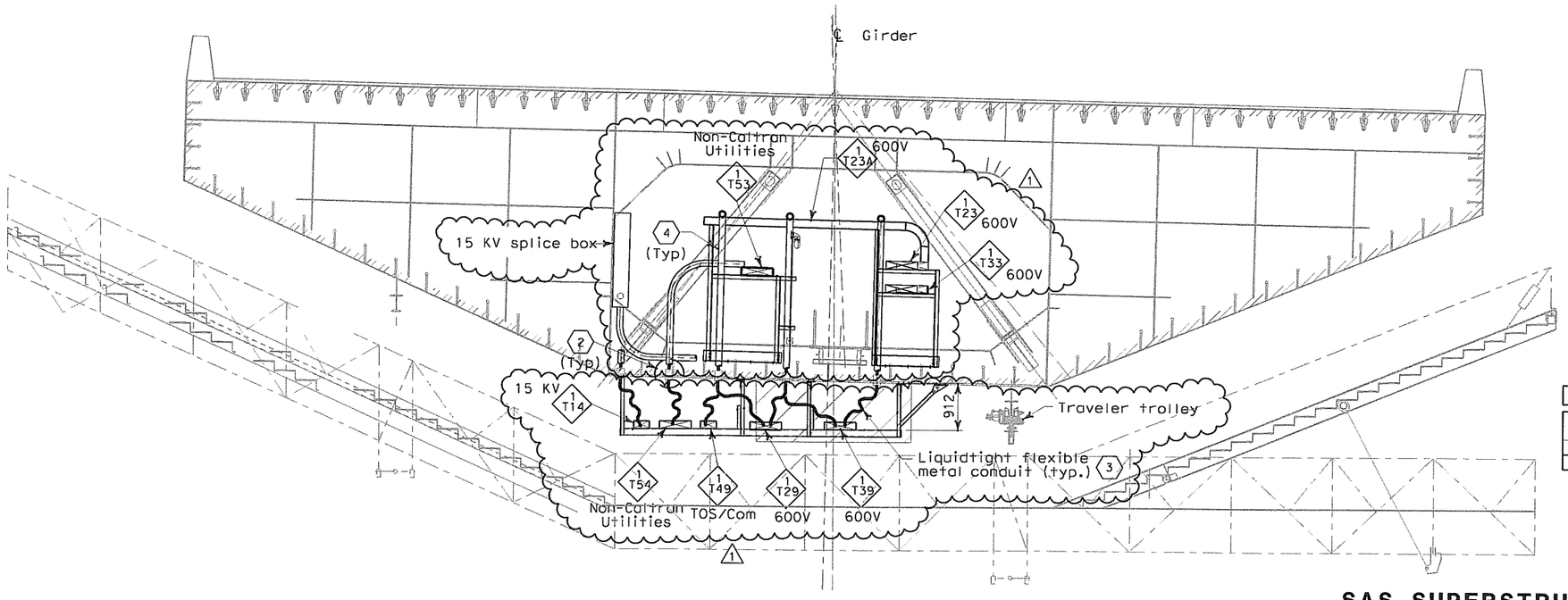

SECTION D-D
SCALE 1:50

SHEET NOTES:

1. For typical below bridge girder cable supports, see AS-sheets.
2. For location of conduit penetrations thru girder plate, see Utility Detail No. 1 and Utility Layout sheets respectively. To prevent moisture from passing inside the sleeve, Contractor shall install sealant after conduit have been installed. Spares shall be plugged and capped.
3. For installation detail of liquidtight flexible metal conduits below girder, see sheet E-126.
4. For installation detail of conduits inside girder, see sheet E-126B.

NOTES:

1. References:
   - For typical tray and conduit installation plan at Pier W2W, see sheet E-126.
   - For typical tray and grounding installation details, see sheet E-125.
   - For typical tray and conduit installation details, see sheet E-124.
   - For stanchion mounted light installation detail, see sheet E-123.
   - For girder cable tray supports, see AS-sheets.

REGISTERED PROFESSIONAL ENGINEER S. A. ESTOQUE, JR. No. E-10151 Exp. 12/31/2008 ELECTRICAL STATE OF CALIFORNIA

FOR REVISION ONLY

REQUEST FOR INFORMATION NOT ADDRESSED IN THIS CCO REMAIN IN FORCE

MARK	DATE	DESCRIPTIONS	BY	CH'D	CCO#
1	02/25/08	CABLE TRAY CHANGES	RG	SE	42S1

REVISIONS

CONTRACT CHANGE ORDER NO. _____
SHEET ____ OF ____

DETAILS
SAS SUPERSTRUCTURE GIRDER WESTBOUND PIER W2W SECTIONS AND TYPICAL PENETRATIONS
SCALE AS NOTED

E-129

CALCULATED/DESIGNED BY	FK 08/02	REVISED BY	IAH
CHECKED BY	IAH 08/02	DATE REVISED	03/04

DESIGN OVERSIGHT
BEHZAD GOLEMOHAMMADI

STATE OF CALIFORNIA - DEPARTMENT OF TRANSPORTATION
Caltrans

THIS PLAN ACCURATE FOR ELECTRICAL WORK ONLY.

ALL DIMENSIONS ARE IN MILLIMETERS UNLESS OTHERWISE SHOWN

FOR REDUCED PLANS ORIGINAL SCALE IS IN MILLIMETERS 0 20 40 60 80

DGN FILE =>T:\13103\MS\pse\SAS Struc\CCO\SAS CCO42S1\CCO 42S1 Final Submittal 2008-07-11\04-0120F1_0181R01.dgn
USERNAME =>llorico

CU 04251 | EA 0120F1

LAST REVISION 00-00-00
DATE PLOTTED => 7/11/2008
TIME PLOTTED => 2:49:01 PM

DIST	COUNTY	ROUTE	KILOMETER POST TOTAL PROJECT	SHEET No.	TOTAL SHEETS
04	SF	80	13.2/13.9	181 S1	1204

REGISTERED ELECTRICAL ENGINEER 2/22/08 DATE

PLANS APPROVAL DATE

REGISTERED PROFESSIONAL ENGINEER S. A. ESTOQUE, JR. No. E-10151 Exp. 12/31/2008 ELECTRICAL STATE OF CALIFORNIA

PB AMERICAS, Inc.
A Parsons Brinckerhoff Company
303 Second St., Suite 700N
San Francisco, CA 94107-1317

The State of California or its officers or agents shall not be responsible for the accuracy or completeness of electronic copies of this plan sheet.

Caltrans now has a web site! To get to the web site, go to: http://www.dot.ca.gov

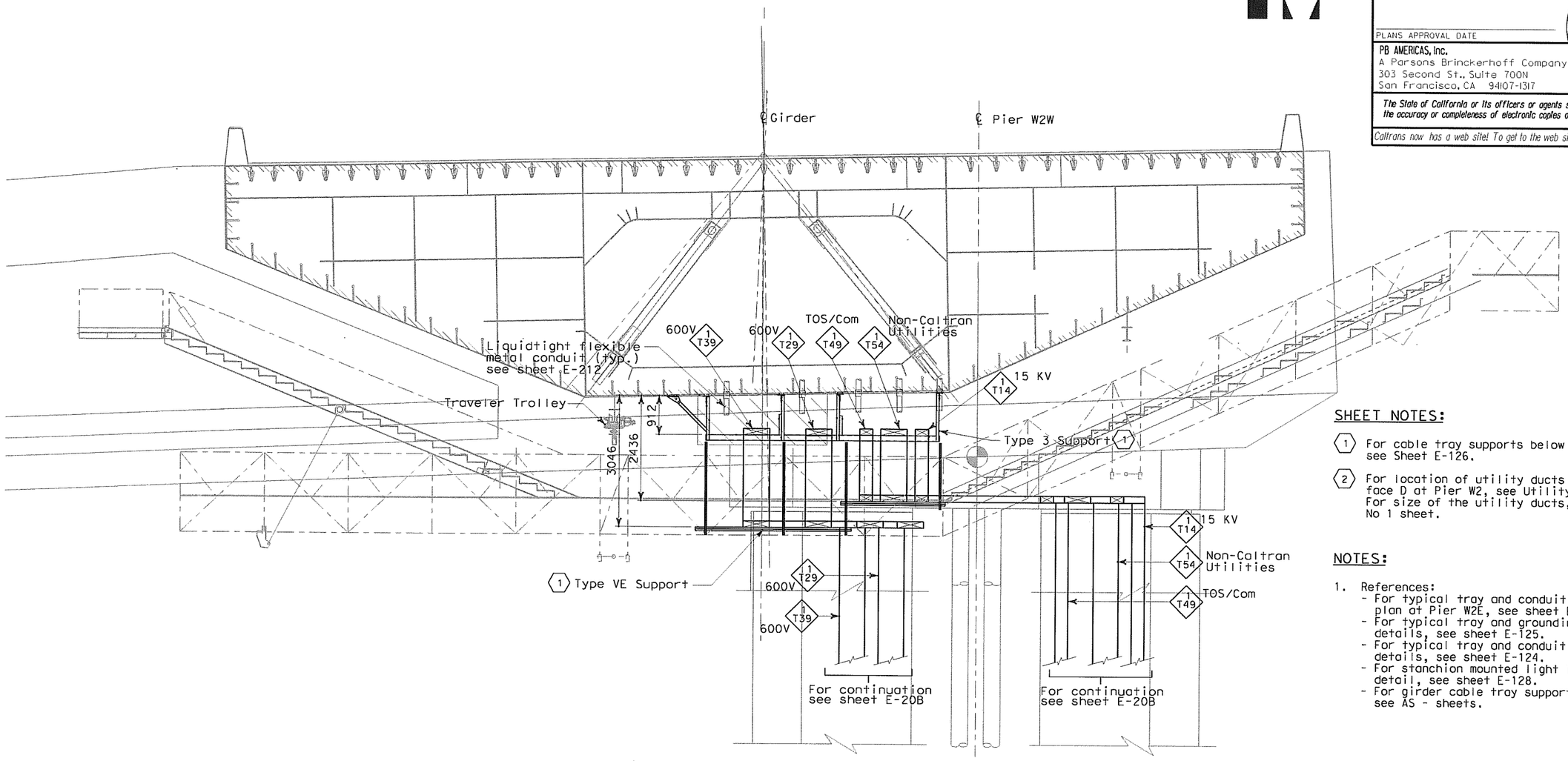

SECTION B-B

SCALE 1:50

SHEET NOTES:

1. For cable tray supports below bridge girder, see Sheet E-126.
2. For location of utility ducts through girder face D at Pier W2, see Utility Layout sheet. For size of the utility ducts, see Utility No 1 sheet.

NOTES:

1. References:
   - For typical tray and conduit installation plan at Pier W2E, see sheet E-126.
   - For typical tray and grounding installation details, see sheet E-125.
   - For typical tray and conduit installation details, see sheet E-124.
   - For stanchion mounted light installation detail, see sheet E-128.
   - For girder cable tray supports, see AS - sheets.

REQUEST FOR INFORMATION NOT ADDRESSED IN THIS CCO REMAIN IN FORCE

MARK	DATE	DESCRIPTIONS	BY	CH'D	CCO#
0	02/25/08	CABLE TRAY CHANGES	RG	SE	42S1

REVISIONS

CONTRACT CHANGE ORDER NO. _____
SHEET _____ OF _____

DETAILS
SAS SUPERSTRUCTURE GIRDER WESTBOUND PIER W2W SECTIONS AND TYPICAL PENETRATIONS

SCALE AS NOTED

E-129A

CALCULATED/ DESIGNED BY	RG	DATE 08/02	REVISED BY
CHECKED BY	NE	08/02	DATE REVISED

DESIGN OVERSIGHT
BEHZAD GOLEMOHAMMADI

STATE OF CALIFORNIA - DEPARTMENT OF TRANSPORTATION
Caltrans

THIS PLAN ACCURATE FOR ELECTRICAL WORK ONLY.

ALL DIMENSIONS ARE IN MILLIMETERS UNLESS OTHERWISE SHOWN

FOR REDUCED PLANS ORIGINAL SCALE IS IN MILLIMETERS 0 20 40 60 80

DGN FILE =>T:\13103\MS\pse\SAS Struc\CCO\SAS CCO42S1\CCO 42S1 Final Submittal 2008-07-11\04-0120f1_0181S01.dgn
USERNAME =>llorico

CU 04251 | EA 0120F1

LAST REVISION 00-00-00 | DATE PLOTTED => 7/11/2008 | TIME PLOTTED => 2:49:22 PM

DIST	COUNTY	ROUTE	KILOMETER POST TOTAL PROJECT	SHEET No	TOTAL SHEETS
04	SF	80	13.2/13.9	183 R1	1204

REGISTERED ELECTRICAL ENGINEER 12/19/02 DATE

12-6-04
PLANS APPROVAL DATE

REGISTERED PROFESSIONAL ENGINEER JENS ERLINGSSON No. 8249 Exp. 9/30/06 ELECTRICAL STATE OF CALIFORNIA

PB POWER, Inc.
A Parsons Brinckerhoff Company
303 Second St., Suite 700N
San Francisco, CA 94107-1317

The State of California or its officers or agents shall not be responsible for the accuracy or completeness of electronic copies of this plan sheet.

Caltrans now has a web site! To get to the web site, go to: http://www.dot.ca.gov

Caltrans Metric

NOTE:

1. References:
   - For SAS Superstructure Girder West bound plan, see sheet E-101.
   - For SAS Main Span West bound typical section, see, sheets E-124, E-124A & E-124B.

SHEET NOTES:

1. For utility opening detail, see structural sheets.
2. For Type I cable tray support structure, see AS-sheets.
3. For Type VIII cable tray support structure, see AS-sheets.
4. For Type IX cable tray support structure, see AS-sheets.
5. For Type II Cable Tray Support Structure, see AS-sheets. (Omit bottom rung).
6. For Type X Cable Tray Support Structure, see AS-sheets.
7. Deleted.
8. Deleted.
9. Type VIII support with the exception of angle steel bracket oriented as shown on Detail 1. For Details, see AS-sheets.
10. For Type XI cable tray support structure, see AS-sheets.
11. For cable tray support see drawing AS-160.
12. Install grommet of neoprene rubber or similar materials to protect cable insulation from sharp metallic edges. △1

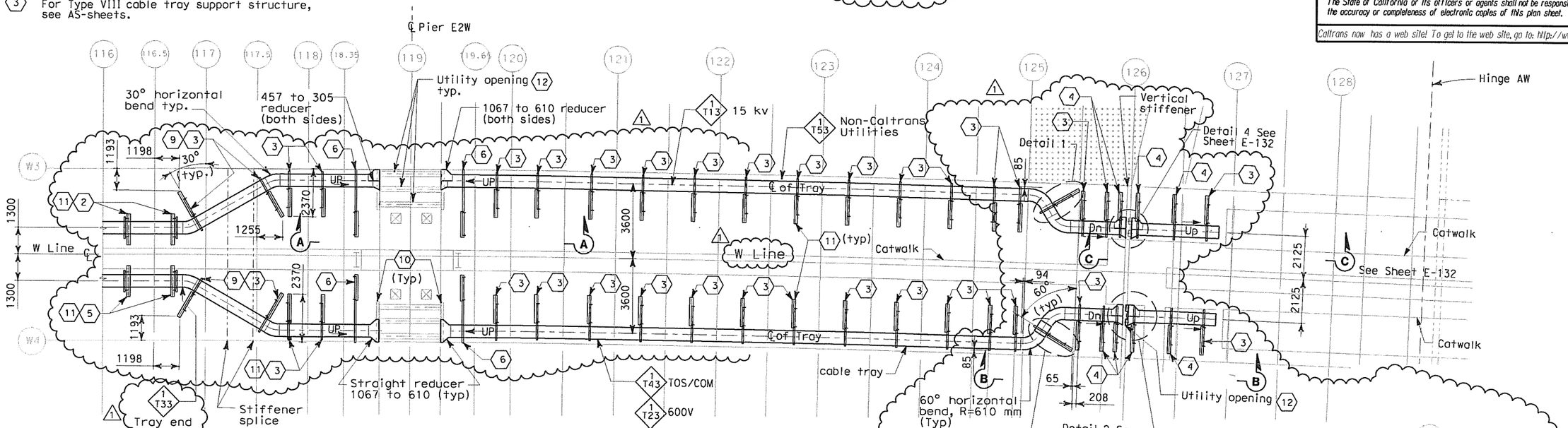

PARTIAL PLAN
SCALE 1:100

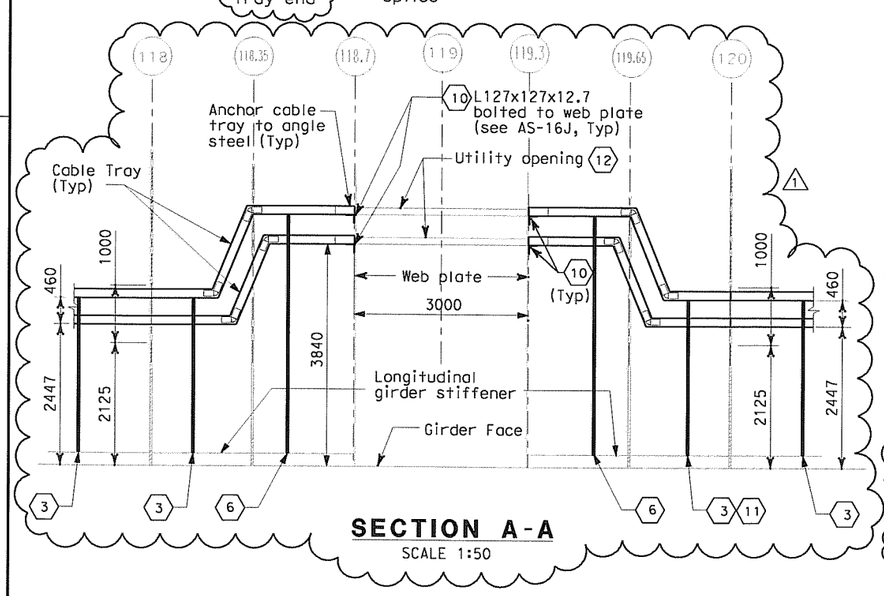

SECTION A-A
SCALE 1:50

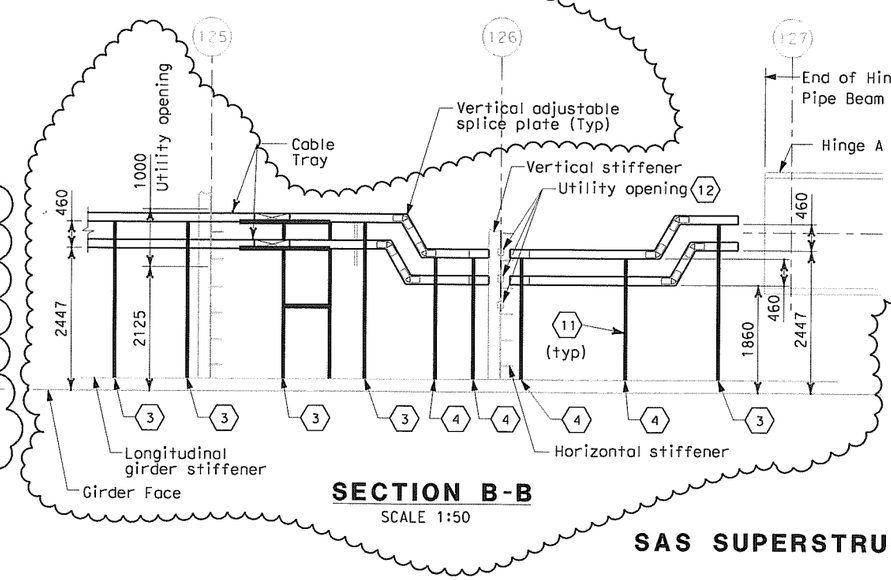

SECTION B-B
SCALE 1:50

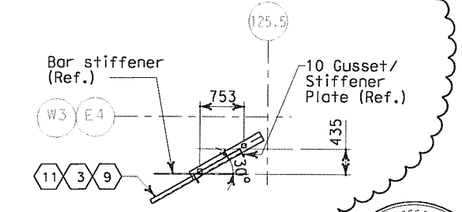

DETAIL 1
SCALE 1:100

REGISTERED PROFESSIONAL ENGINEER S. A. ESTOQUE, JR. No. E-10151 Exp. 12/31/2008 ELECTRICAL STATE OF CALIFORNIA

FOR REVISION ONLY

REQUEST FOR INFORMATION NOT ADDRESSED IN THIS CCO REMAIN IN FORCE

MARK	DATE	DESCRIPTIONS	BY	CH'D	CCO#
1	02/25/08	CABLE TRAY CHANGES	TW	RG SE	42S1

REVISIONS

CONTRACT CHANGE ORDER NO. _____
SHEET _____ OF _____

DETAILS
SAS SUPERSTRUCTURE GIRDER WESTBOUND
HINGE AW
SCALE AS NOTED

E-131

THIS PLAN ACCURATE FOR ELECTRICAL WORK ONLY.

ALL DIMENSIONS ARE IN MILLIMETERS UNLESS OTHERWISE SHOWN

FOR REDUCED PLANS ORIGINAL SCALE IS IN MILLIMETERS 0 20 40 60 80

DGN FILE =>T:\13103\MS\pse\SAS Struc\CCO\SAS CCO42S1\CCO 42S1 Final Submittal 2008-07-11\04-0120f1_0183R01.dgn
USERNAME =>llorico

CU 04251 | EA 0120F1

DATE PLOTTED => 7/11/2008
TIME PLOTTED => 2:49:41 PM

LAST REVISION 00-00-00

STATE OF CALIFORNIA - DEPARTMENT OF TRANSPORTATION
Caltrans

DESIGN OVERSIGHT
BEHZAD GOLEMOHAMMADI

	DATE	REVISED BY	DATE REVISED
CALCULATED/DESIGNED BY	FK 08/02	IAH	IAH 3/04
CHECKED BY	IAH 08/02		

DIST	COUNTY	ROUTE	KILOMETER POST TOTAL PROJECT	SHEET No	TOTAL SHEETS
04	SF	80	13.2/13.9	184 R1	1204

Caltrans Metric

12/19/02
REGISTERED ELECTRICAL ENGINEER DATE

12-6-04
PLANS APPROVAL DATE

REGISTERED PROFESSIONAL ENGINEER JENS ERLINGSSON No. 8249 Exp. 9/30/06 ELECTRICAL STATE OF CALIFORNIA

PB POWER, Inc.
A Parsons Brinckerhoff Company
303 Second St., Suite 700N
San Francisco, CA 94107-1317

The State of California or its officers or agents shall not be responsible for the accuracy or completeness of electronic copies of this plan sheet.

Caltrans now has a web site! To get to the web site, go to http://www.dot.ca.gov

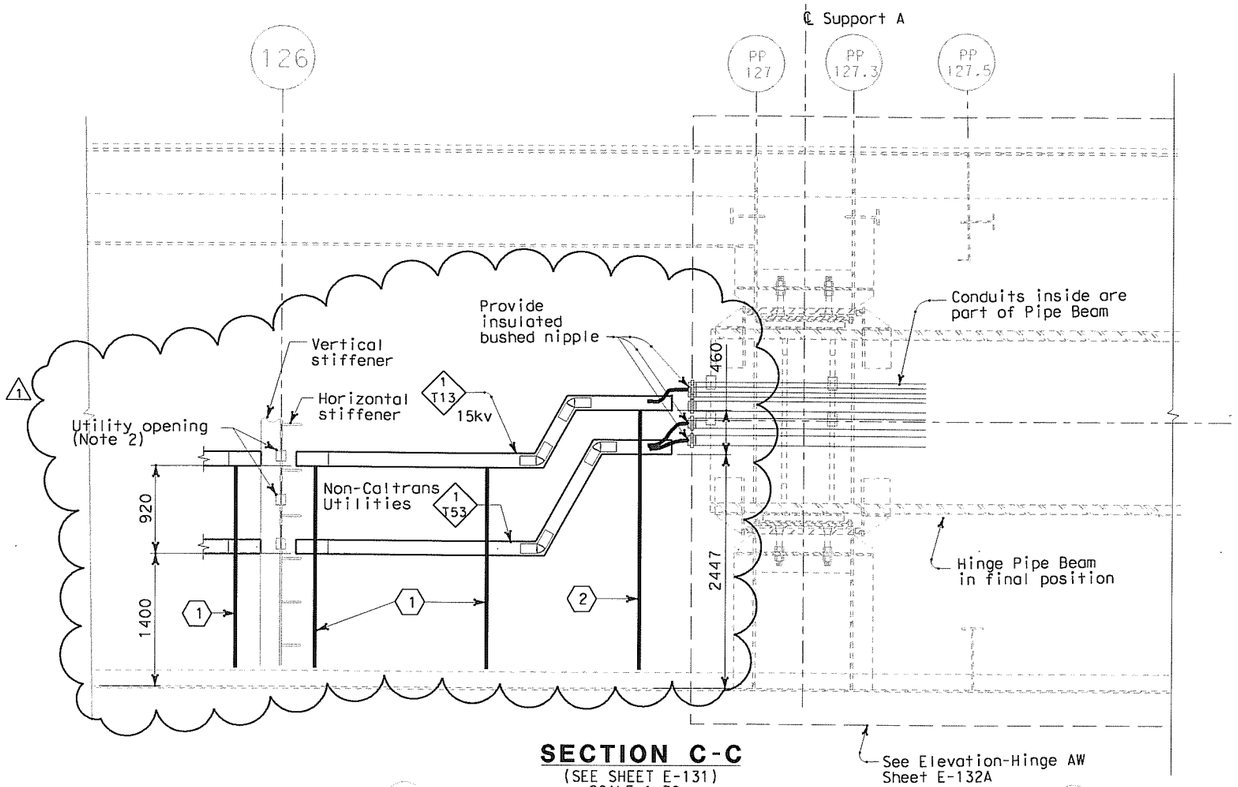

SECTION C-C
(SEE SHEET E-131)
SCALE 1:30

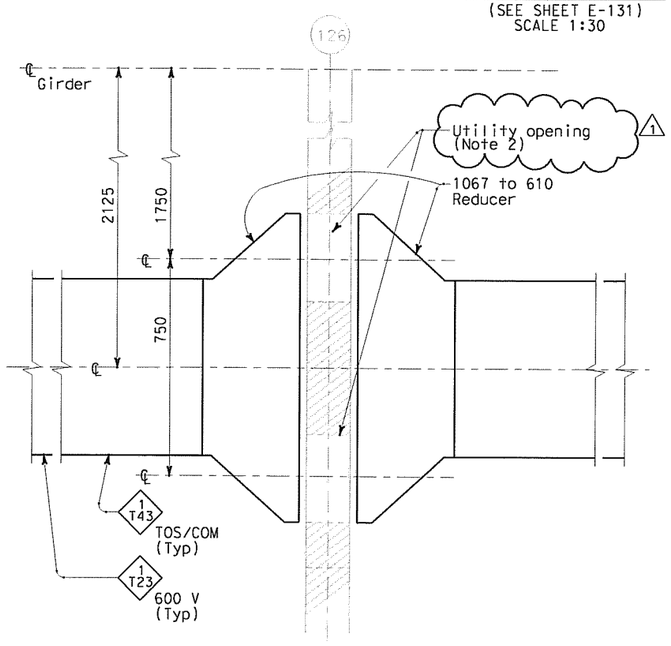

DETAIL 2
(SEE E-131)
SCALE 1:10

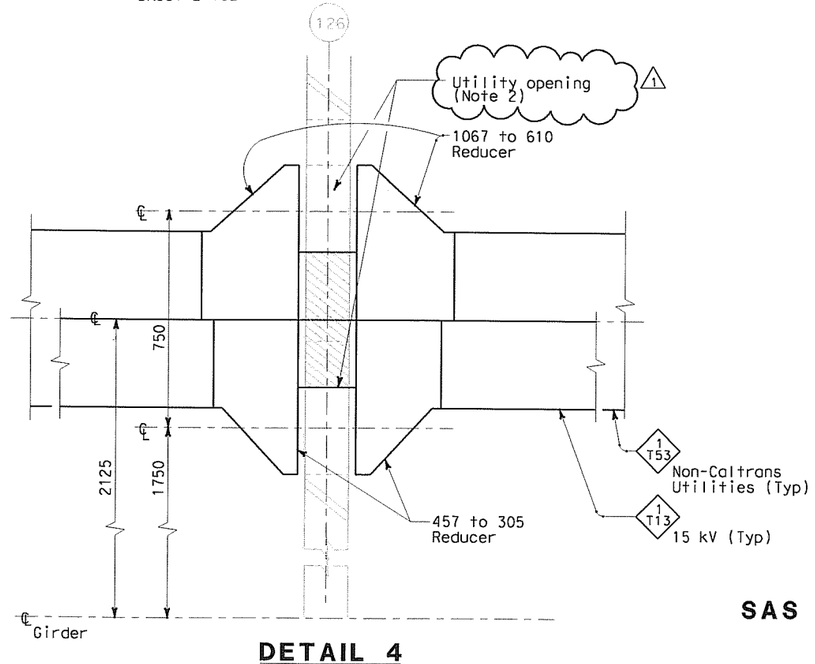

DETAIL 4
(SEE E-131)
SCALE 1:10

NOTES:

1. For utility opening details at panel point 126, see Structural sheets.
2. Install grommet of neoprene rubber or similar materials to protect cable insulation from sharp metallic edges.

SHEET NOTES:

1. For type IX cable tray support structure, see AS-15.
2. For type VIII cable tray support structure, see AS-15.

REGISTERED PROFESSIONAL ENGINEER S. A. ESTOQUE, JR No. E-10151 Exp. 12/31/2008 ELECTRICAL STATE OF CALIFORNIA

FOR REVISION ONLY

REQUEST FOR INFORMATION NOT ADDRESSED IN THIS CCO REMAIN IN FORCE

MARK	DATE	DESCRIPTIONS	BY	CH'D	CCO#
1	02/25/08	CABLE TRAY CHANGES	MP	RG SE	42S1

REVISIONS

CONTRACT CHANGE ORDER NO. _____
SHEET _____ OF _____

DETAILS
SAS SUPERSTRUCTURE GIRDER WESTBOUND HINGE AW
SCALE AS NOTED

E-132

THIS PLAN ACCURATE FOR ELECTRICAL WORK ONLY.

ALL DIMENSIONS ARE IN MILLIMETERS UNLESS OTHERWISE SHOWN

FOR REDUCED PLANS ORIGINAL SCALE IS IN MILLIMETERS 0 20 40 60 80

DGN FILE =>T:\13103\MS\pse\SAS Struc\CCO\SAS CCO42S1\CCO 42S1 Final Submittal 2008-07-11\04-0120f1_0184R01.dgn
USERNAME =>llorico

CU 04251 EA 0120F1

STATE OF CALIFORNIA - DEPARTMENT OF TRANSPORTATION
Caltrans

DESIGN OVERSIGHT: BEHZAD GOLEMOHAMMADI

CALCULATED/ DESIGNED BY	FK	DATE 08/02	REVISED BY	EJL
CHECKED BY	IAH	08/02	DATE REVISED	2/04

LAST REVISION 00-00-00
DATE PLOTTED => 7/11/2008
TIME PLOTTED => 2:50:01 PM

DIST	COUNTY	ROUTE	KILOMETER POST TOTAL PROJECT	SHEET No	TOTAL SHEETS
04	SF	80	13.2/13.9	187 R1	1204

REGISTERED ELECTRICAL ENGINEER 2/6/04 DATE

12-6-04
PLANS APPROVAL DATE

PB POWER, Inc.
A Parsons Brinckerhoff Company
303 Second St., Suite 700N
San Francisco, CA 94107-1317

REGISTERED PROFESSIONAL ENGINEER JENS ERLINGSSON No. 8249 Exp. 9/30/06 ELECTRICAL STATE OF CALIFORNIA

The State of California or its officers or agents shall not be responsible for the accuracy or completeness of electronic copies of this plan sheet.

Caltrans now has a web site! To get to the web site, go to http://www.dot.ca.gov

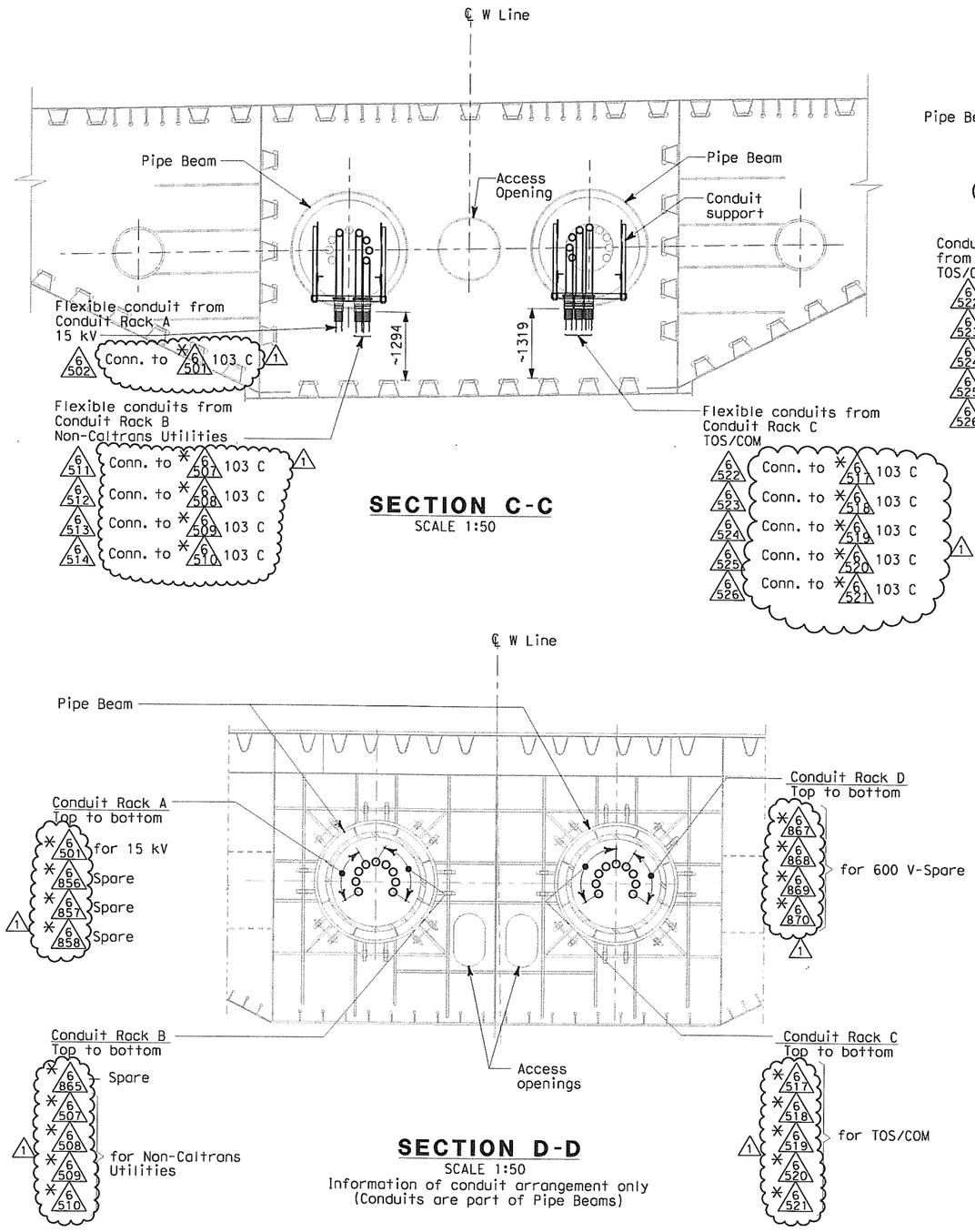

SECTION C-C
SCALE 1:50

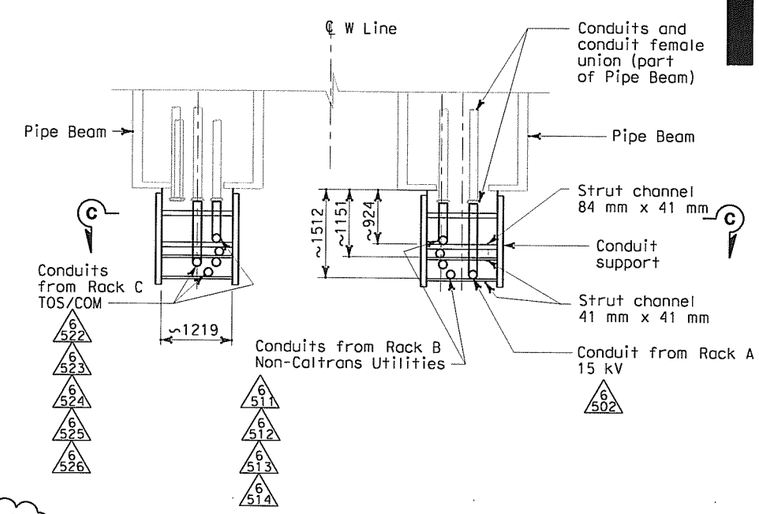

PLAN - DETAIL 1
SCALE 1:50

NOTES:

1. Materials, hardware and fittings shall be galvanized or stainless steel. For additional requirements, see Electrical Special Provisions.
2. References:
   - For Westbound plans and sections, see sheets E-101A and E-132A.
3. Existing conduits (*) inside pipe beam are supplied in Skyway contract. 1

SECTION D-D
SCALE 1:50
Information of conduit arrangement only
(Conduits are part of Pipe Beams)

REGISTERED PROFESSIONAL ENGINEER S. A. ESTOQUE, JR No. E-10151 Exp. 12/31/2008 ELECTRICAL STATE OF CALIFORNIA

FOR REVISION ONLY

REQUEST FOR INFORMATION NOT ADDRESSED IN THIS CCO REMAIN IN FORCE

MARK	DATE	DESCRIPTIONS	BY	CH'D	CCO#
1	02/25/08	CABLE TRAY CHANGES	JD	RG SE	42S1

REVISIONS

CONTRACT CHANGE ORDER NO. _____
SHEET _____ OF _____

DETAILS
SAS SUPERSTRUCTURE AND SKYWAY STRUCTURE
GIRDER INTERFACE WESTBOUND
HINGE AW SUPPORTS
SCALE AS NOTED

E-132C

THIS PLAN ACCURATE FOR ELECTRICAL WORK ONLY.

ALL DIMENSIONS ARE IN MILLIMETERS UNLESS OTHERWISE SHOWN

FOR REDUCED PLANS ORIGINAL SCALE IS IN MILLIMETERS 0 20 40 60 80

DGN FILE =>T:\13103\MS\pse\SAS Struc\CCO\SAS CCO42S1\CCO 42S1 Final Submittal 2008-07-11\04-0120f1_0187R01.dgn
USERNAME =>llorico

CU 04251 EA 0120F1

STATE OF CALIFORNIA - DEPARTMENT OF TRANSPORTATION
Caltrans

DESIGN OVERSIGHT: BEHZAD GOLEMOHAMMADI

CALCULATED/ DESIGNED BY	CYF	DATE 12/03	REVISED BY	EJL
CHECKED BY	EJL	1/04	DATE REVISED	2/04

LAST REVISION 00-00-00
DATE PLOTTED => 7/11/2008
TIME PLOTTED => 2:50:35 PM

DIST	COUNTY	ROUTE	KILOMETER POST TOTAL PROJECT	SHEET No.	TOTAL SHEETS
04	SF	80	13.2/13.9	215 R2	1204

REGISTERED ELECTRICAL ENGINEER 12/19/02 DATE

12-6-04
PLANS APPROVAL DATE

REGISTERED PROFESSIONAL ENGINEER JENS ERLINGSSON No. 8249 Exp. 9/30/06 ELECTRICAL STATE OF CALIFORNIA

PB POWER, Inc.
A Parsons Brinckerhoff Company
303 Second St., Suite 700N
San Francisco, CA 94107-1317

The State of California or its officers or agents shall not be responsible for the accuracy or completeness of electronic copies of this plan sheet.

Caltrans now has a web site! To get to the web site, go to http://www.dot.ca.gov

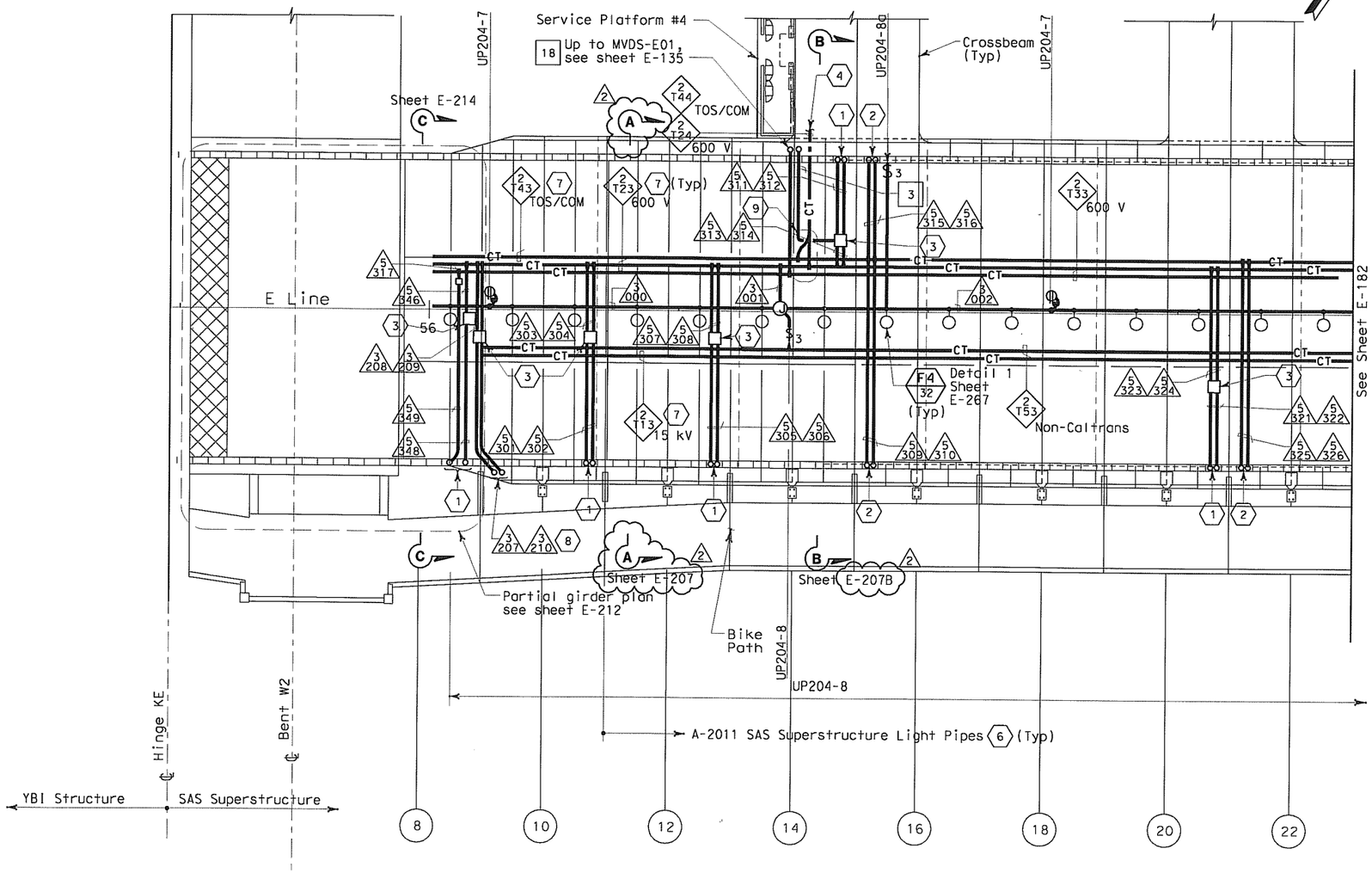

SAS SUPERSTRUCTURE - CONDUIT AND CABLE TRAY PLAN

SHEET NOTES:

1. Conduit up to PB-LTG located in barrier, see sheet E-135.
2. Conduit up to PB-COM located in barrier, see sheet E-135.
3. PB-2A, locate on top of floor.
4. For cable tray run and lighting inside crossbeam, see sheet E-114.
5. For lighting inside crossbeam, see sheet E-119.
6. For future light pipes. see sheets E-202 thru E-205. For light pipe schedule, see sheet E-217.
7. For cable tray & ground bar support, refer to sheet E-208.
8. Up to suspension cable lighting, for continuation see sheet E-135.
9. For fiber splice tray detail. Refer to sheet E-211.

NOTES:

1. References:
   - TOS equipment is shown for conduit routing only. For typical details of TOS controller and devices, see sheets E-344 through E-346.
   - For types of pull boxes, splice boxes and enclosures, see sheet E-169.
   - For bridge grounding plan, see sheet E-196.
   - For circuit and conduit/cable tray schedules, see sheets starting at E-401.
2. For other work related to Hinge KE and items not shown on this sheet, see Electrical Special Provisions.
3. The girder lighting fixtures are shown diagrammatically.Contractor shall install fixtures at railing posts with a maximum of 8000 mm between fixtures. For types and typical lighting fixture installation details, see sheet E-206.
4. The cable trays are shown diagrammatically. For typical girder cable tray plans and sections, see sheets E-207 and E-208.

REGISTERED PROFESSIONAL ENGINEER FADI WALIEDDINE No. 11465 Exp. 12/31/2009 ELECTRICAL STATE OF CALIFORNIA

FOR REVISION ONLY

REQUEST FOR INFORMATION NOT ADDRESSED IN THIS CCO REMAIN IN FORCE

MARK	DATE	DESCRIPTIONS	BY	CH'D	CCO#
2	02/25/08	CABLE TRAY CHANGES	RG	FW	42S1
1	02/19/08	ELECTRICAL MODIFICATIONS	MP EL	RR	42

REVISIONS

CONTRACT CHANGE ORDER NO._____
SHEET_____ OF _____

SAS SUPERSTRUCTURE GIRDER EASTBOUND
LIGHTING AND ELECTRICAL SYSTEMS
SCALE 1:200

THIS PLAN IS ACCURATE FOR ELECTRICAL WORK ONLY.

ALL DIMENSIONS ARE IN METERS UNLESS OTHERWISE SHOWN

FOR REDUCED PLANS ORIGINAL SCALE IS IN MILLIMETERS 0 20 40 60 80

DGN FILE =>T:\13103\MS\pse\SAS Struc\CCO\SAS CCO42S1\CCO 42S1 Final Submittal 2008-07-11\04-0120F1_0215R02.dgn
USERNAME =>llorico

CU 04251 | EA 0120F1

E-181

CALCULATED/ DESIGNED BY	EDC	DATE 08/02	REVISED BY
CHECKED BY	CYF	08/02	DATE REVISED

DESIGN OVERSIGHT
BEHZAD GOLEMOHAMMADI

STATE OF CALIFORNIA - DEPARTMENT OF TRANSPORTATION
Caltrans

LAST REVISION 00-00-00
DATE PLOTTED => 7/11/2008
TIME PLOTTED => 2:50:54 PM

DIST	COUNTY	ROUTE	KILOMETER POST TOTAL PROJECT	SHEET No.	TOTAL SHEETS
04	SF	80	13.2/13.9	216 R1	1204

REGISTERED ELECTRICAL ENGINEER 12/19/02 DATE

12-6-04
PLANS APPROVAL DATE

REGISTERED PROFESSIONAL ENGINEER JENS ERLINGSSON No. 8249 Exp. 9/30/06 ELECTRICAL STATE OF CALIFORNIA

PB POWER, Inc.
A Parsons Brinckerhoff Company
303 Second St., Suite 700N
San Francisco, CA 94107-1317

The State of California or its officers or agents shall not be responsible for the accuracy or completeness of electronic copies of this plan sheet.

Caltrans now has a web site! To get to the web site, go to http://www.dot.ca.gov

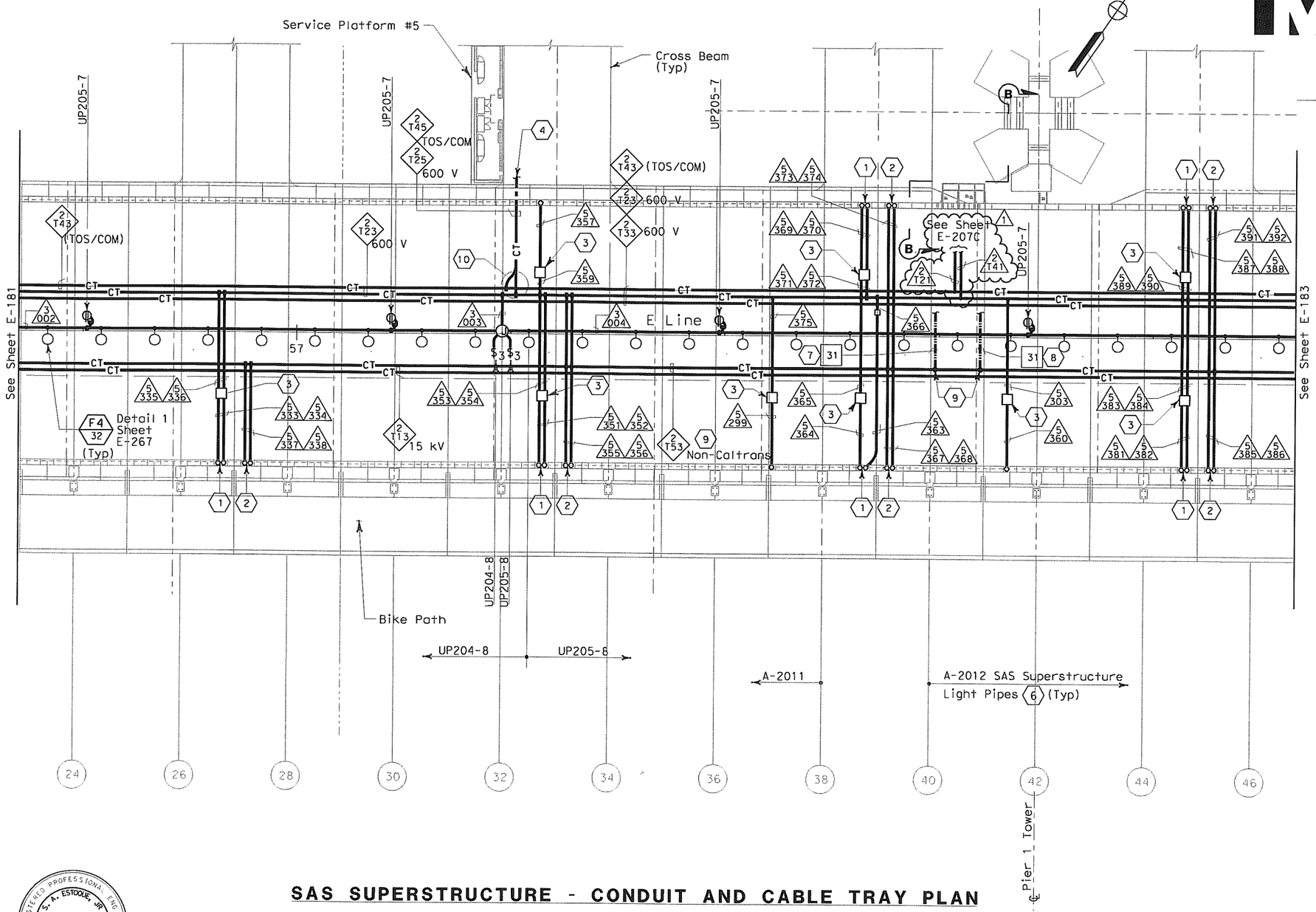

SHEET NOTES:

1. Conduit up to PB-LTG located in barrier, see sheet E-136.
2. Conduit up to PB-COM located in barrier, see sheet E-136.
3. PB-2A, locate on top of floor.
4. For cable tray run and lighting inside crossbeam, see sheet E-115.
5. For lighting inside crossbeam, see sheet E-119.
6. For future light pipe, see sheets E-202 thru E-204. For light pipe schedule, see sheet E-217.
7. Routed inside conduit 3330A.
8. Routed inside conduit 3339A.
9. 250 kcmil copper grounding conductor exothermically welded to 500 kcmil system grounding conductor.
10. For fiber splice tray detail, refer to sheet E-355.

NOTES:

1. References:
   - TOS equipment is shown for conduit routing only. For typical details of TOS controller and devices, see sheets E-344 through E-357.
   - For types of pull boxes, splice boxes and enclosures, see sheet E-169.
   - For bridge grounding plan, see sheet E-196.
   - For circuit and conduit/cable tray schedules, see sheets starting at E-401.
2. For other work related to items not shown on this sheet, see Electrical Special Provisions.
3. The girder lighting fixtures are shown diagrammatically. Contractor shall install fixtures at railing posts with a maximum of 8000 mm between fixtures. For types and typical lighting fixture installation details, see sheet E-206.
4. The cable trays are shown diagrammatically. For typical girder cable tray plans and sections, see sheets E-207 and E-208.
5. For Section B-B, see sheet E-264A.

SAS SUPERSTRUCTURE - CONDUIT AND CABLE TRAY PLAN

REGISTERED PROFESSIONAL ENGINEER S. A. ESTOQUE, JR. No. E-10151 Exp. 12/31/2008 ELECTRICAL STATE OF CALIFORNIA

FOR REVISION ONLY

REQUEST FOR INFORMATION NOT ADDRESSED IN THIS CCO REMAIN IN FORCE

MARK	DATE	DESCRIPTIONS	BY	CH'D	CCO#
1	02/25/08	CABLE TRAY CHANGES	MP	RG SE	42S1

REVISIONS

CONTRACT CHANGE ORDER NO. _____
SHEET _____ OF _____

THIS PLAN IS ACCURATE FOR ELECTRICAL WORK ONLY.

SAS SUPERSTRUCTURE GIRDER EASTBOUND
LIGHTING AND ELECTRICAL SYSTEMS
SCALE 1:200

E-182

STATE OF CALIFORNIA - DEPARTMENT OF TRANSPORTATION
Caltrans

DESIGN OVERSIGHT: BEHZAD GOLEMOHAMMADI

CALCULATED/DESIGNED BY	EDC	DATE 08/02	REVISED BY
CHECKED BY	CYF	08/02	DATE REVISED

LAST REVISION 00-00-00 | DATE PLOTTED => 7/11/2008 | TIME PLOTTED => 2:54:02 PM

FOR REDUCED PLANS ORIGINAL SCALE IS IN MILLIMETERS 0 20 40 60 80

DGN FILE =>T:\13103\MS\pse\SAS Struc\CCO\SAS CC042S1\CCO 42S1 Final Submittal 2008-07-11\04-0120f1_021GR01.dgn
USERNAME =>llorico

CU 04251 | EA 0120F1

DIST	COUNTY	ROUTE	KILOMETER POST TOTAL PROJECT	SHEET No.	TOTAL SHEETS
04	SF	80	13.2/13.9	220 R1	1204

REGISTERED ELECTRICAL ENGINEER 12/19/02 DATE

12-6-04
PLANS APPROVAL DATE

REGISTERED PROFESSIONAL ENGINEER JENS ERLINGSSON No. 8249 Exp. 9/30/06 ELECTRICAL STATE OF CALIFORNIA

PB POWER, Inc.
A Parsons Brinckerhoff Company
303 Second St., Suite 700N
San Francisco, CA 94107-1317

The State of California or its officers or agents shall not be responsible for the accuracy or completeness of electronic copies of this plan sheet.

Caltrans now has a web site! To get to the web site, go to http://www.dot.ca.gov

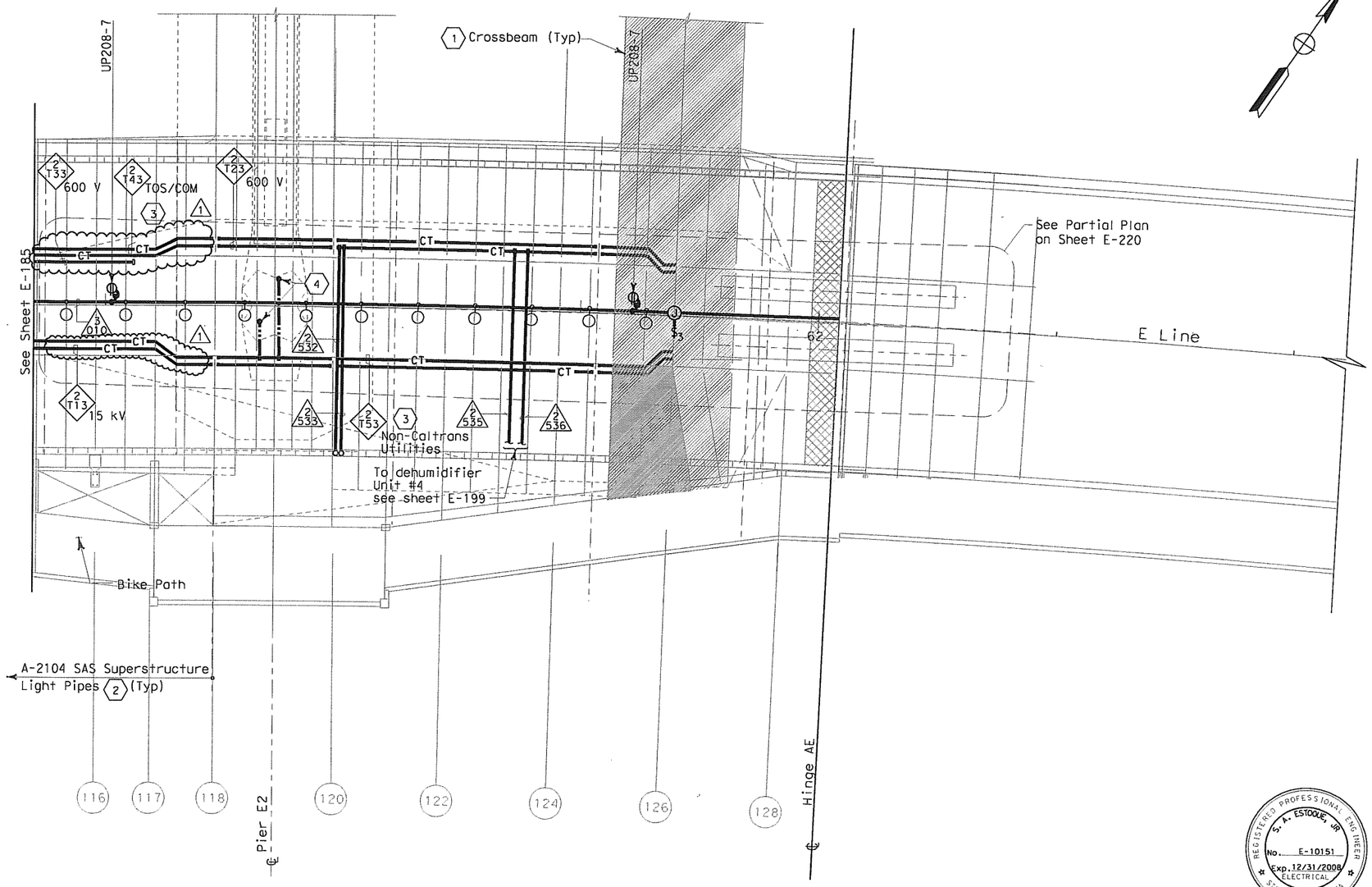

SAS SUPERSTRUCTURE - CONDUIT AND CABLE TRAY PLAN

SHEET NOTES:

1. For lighting inside crossbeam, see sheet E-119.
2. For future light pipes, see sheets E-202 thru E-204. For light pipe schedule, see sheet E-217.
3. For cable tray & ground bar support, refer to sheet E-208.
4. 250 kcmil bare copper grounding conductor exothermically welded to 500 kcmil system ground conductor. See E2/T1 Structures Contract 04-0120E4. For continuation, see sheet E-196.

NOTES:

1. References:
   - TOS equipment is shown for conduit routing only. For typical details of TOS controller and devices, see sheets E-344 through E-357.
   - For types of pull boxes, splice boxes and enclosures, see sheet E-169.
   - For bridge grounding plan, see sheet E-196.
   - For circuit and conduit/cable tray schedules, see sheets starting at E-401.
2. For other work related to Hinge AE and items not shown on this sheet, see Electrical Special Provisions.
3. The girder lighting fixtures are shown diagrammatically. Contractor shall install fixtures at railing posts with a maximum of 8000 mm between fixtures. For types and typical lighting fixture installation details, see sheet E-206.
4. The cable trays are shown diagrammatically. For typical girder cable tray plans and sections, see sheets E-207 and E-208.

REGISTERED PROFESSIONAL ENGINEER S. A. ESTOOLE, JR. No. E-10151 Exp. 12/31/2008 ELECTRICAL STATE OF CALIFORNIA

FOR REVISION ONLY

REQUEST FOR INFORMATION NOT ADDRESSED IN THIS CCO REMAIN IN FORCE

MARK	DATE	DESCRIPTIONS	BY	CH'D	CCO#
1	02/25/08	CABLE TRAY CHANGES	JD	RG SE	42S1

REVISIONS

CONTRACT CHANGE ORDER NO. _____
SHEET _____ OF _____

SAS SUPERSTRUCTURE GIRDER EASTBOUND
LIGHTING AND ELECTRICAL SYSTEMS
SCALE 1:200

THIS PLAN IS ACCURATE FOR ELECTRICAL WORK ONLY.

ALL DIMENSIONS ARE IN METERS UNLESS OTHERWISE SHOWN.

FOR REDUCED PLANS ORIGINAL SCALE IS IN MILLIMETERS 0 20 40 60 80

DGN FILE =>T:\13103\MS\pse\SAS Struc\CCO\SAS CCO42S1\CCO 42S1 Final Submittal 2008-07-11\04-0120f1_0220R01.dgn
USERNAME =>llorico

CU 04251 | EA 0120F1

E-186

LAST REVISION 00-00-00 | DATE PLOTTED => 7/11/2008 | TIME PLOTTED => 2:53:27 PM 7/11/2008

STATE OF CALIFORNIA - DEPARTMENT OF TRANSPORTATION
Caltrans

DESIGN OVERSIGHT: BEHZAD GOLEMOHAMMADI

CALCULATED/DESIGNED BY: EDC | CHECKED BY: CYF | DATE: 08/02 | DATE: 08/02 | REVISED BY | DATE REVISED

DIST	COUNTY	ROUTE	KILOMETER POST TOTAL PROJECT	SHEET No.	TOTAL SHEETS
04	SF	80	13.2/13.9	221 R1	1204

REGISTERED ELECTRICAL ENGINEER — DATE 2/6/04

12-6-04
PLANS APPROVAL DATE

PB POWER, Inc.
A Parsons Brinckerhoff Company
303 Second St., Suite 700N
San Francisco, CA 94107-1317

The State of California or its officers or agents shall not be responsible for the accuracy or completeness of electronic copies of this plan sheet.

Caltrans now has a web site! To get to the web site, go to http://www.dot.ca.gov

MARK	DATE	DESCRIPTIONS	BY	CH'D	CCO#
1	02/25/08	CABLE TRAY CHANGES	JD	RG SE	42S1

REVISIONS

REQUEST FOR INFORMATION NOT ADDRESSED IN THIS CCO REMAIN IN FORCE

CONTRACT CHANGE ORDER NO. _____
SHEET _____ OF _____

FOR REVISION ONLY

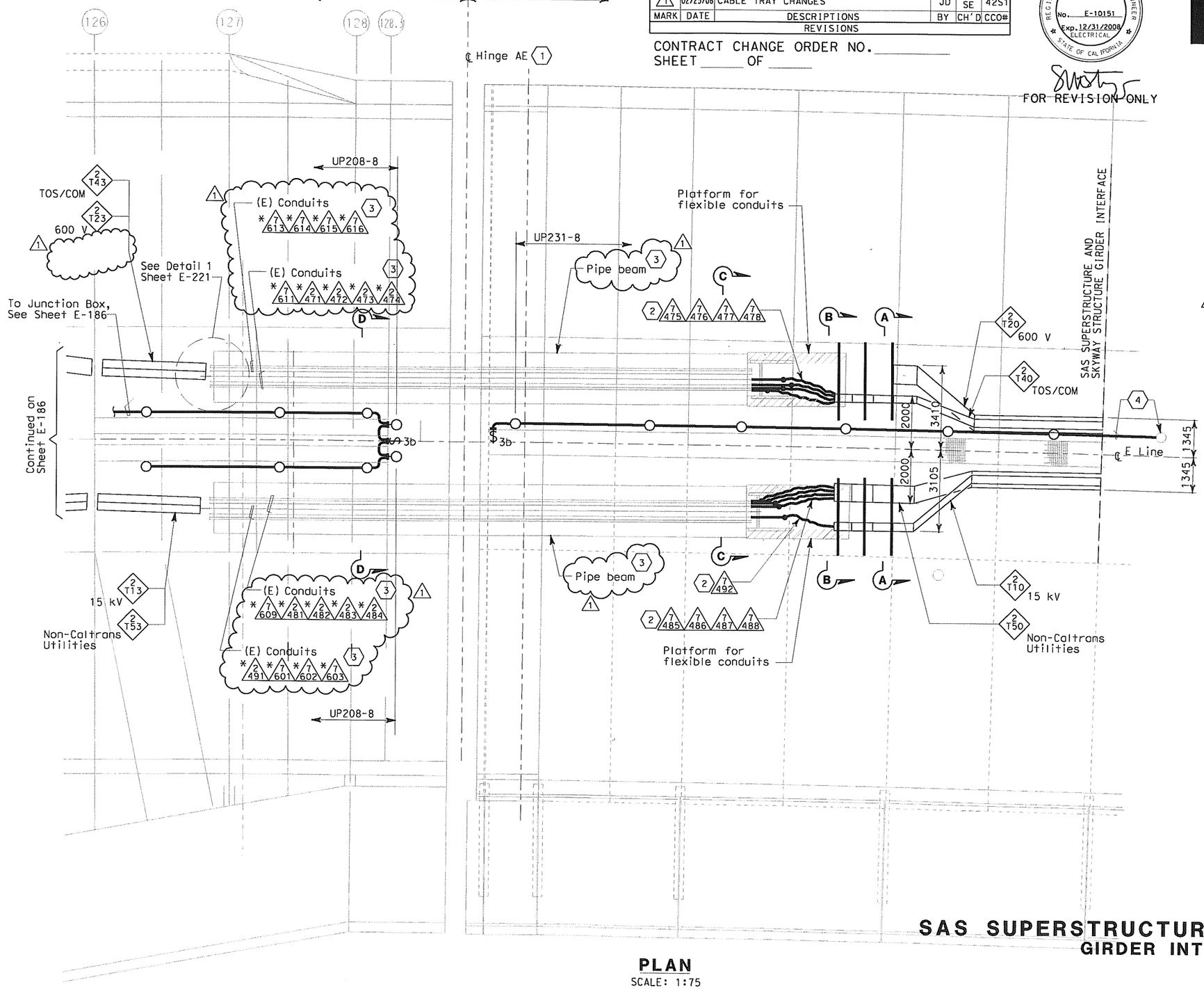

SHEET NOTES:

(1) Hinge AE electrical design is based on the maximum expansion joint movement opening of 1243 mm.

(2) Arrange and group the flexible 103 mm conduits to maintain a minimum voltage level separation of 460 mm between systems.

(1) (3) Existing conduits(*) inside pipe beam are supplied in Skyway contract.

(4) Terminate conduit to the next lighting fixture and splice wiring to circuit UP231-8 of Skyway Structure.

NOTES:

1. Minimum radius of cable tray fittings shall be 610 mm.
2. Minimum radius of 103 mm conduits bends shall be 610 mm.
3. Cables/circuits passing through the hinge locations shall be provided with cable identification tag at both ends of Hinge.
4. For additional work related not shown on this drawing, see Electrical Special Provisions.
5. Section A-A and B-B see sheet E-221B.
6. Section C-C and Section D-D, see sheet E-221C.

SAS SUPERSTRUCTURE AND SKYWAY STRUCTURE GIRDER INTERFACE EASTBOUND

AS NOTED

PLAN

SCALE: 1:75

THIS PLAN ACCURATE FOR ELECTRICAL WORK ONLY.

ALL DIMENSIONS ARE IN MILLIMETERS UNLESS OTHERWISE SHOWN.

FOR REDUCED PLANS ORIGINAL SCALE IS IN MILLIMETERS 0 20 40 60 80

DGN FILE => T:\13103\MS\pse\SAS Struc\CCO\SAS CCO42S1\CCO 42S1 Final Submittal 2008-07-11\04-0120f1_0221R01.dgn
USERNAME => llorico

CU 04251 | EA 0120F1

E-186A

LAST REVISION 00-00-00
DATE PLOTTED => 7/11/2008
TIME PLOTTED => 2:54:50 PM

STATE OF CALIFORNIA - DEPARTMENT OF TRANSPORTATION
Caltrans

DESIGN OVERSIGHT: BEHZAD GOLEMOHAMMADI

CALCULATED/ DESIGNED BY	CYF	DATE 12/03	REVISED BY	EJL
CHECKED BY	EJL	1/04	DATE REVISED	2/04

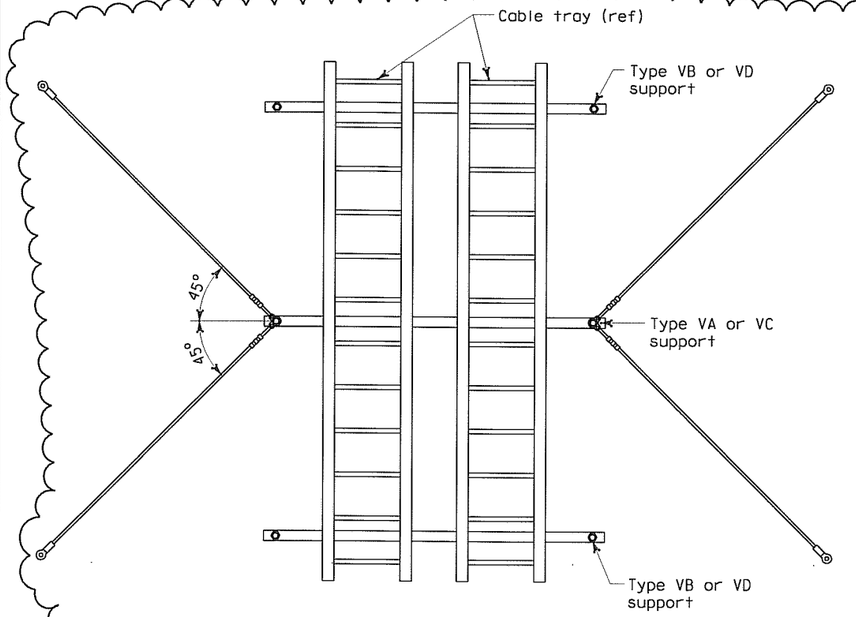

PLAN VIEW - CABLE TRAY SUPPORTS

MATERIAL LIST

Item No.	Description	Type VA thru VE
A	Deleted	
B	Deleted	
C	Threaded steel hanger rod, 13 mm diameter	X
D	Strut channel spring nut, lock washer and hex bolt	X
E	Hold down clamp Cooper B-Line #9SS6-1205 or equal	X
F	Strut hanger trapeze hardware kit	X
G	Heavy duty hold down clamp Cooper B-Line #9SS6-1241 or equal	
H	Deleted	
J	Rod hanger expansion anchor, 13 mm dia, 100 mm minimum depth embedment and allowable load (in tension) of 4.45 kN	X
K	Deleted	
L	Deleted	
M	Rod hanger seismic bracing kit (includes 4-stake eyes, 4-oval sleeves, 4-URC clips and 4-3048mm long wire cables) PW Industries part no. PW18-C26-10/C-SP-316SS or equal	X
N	Strut channel, 41 mm x 82 mm (Double)	X
P	Expansion/sleeve anchors 13 mm dia x 76 mm long hex type	X
Q	Flat washer 13 mm dia bolt size	X
R	Deleted	
S	Threaded rod (13 mm) with stiffener & stiffener clips	X
T	Rod coupler, hex nut and washer for expansion anchor	X
U	Deleted	
V	Deleted	
W	Deleted	

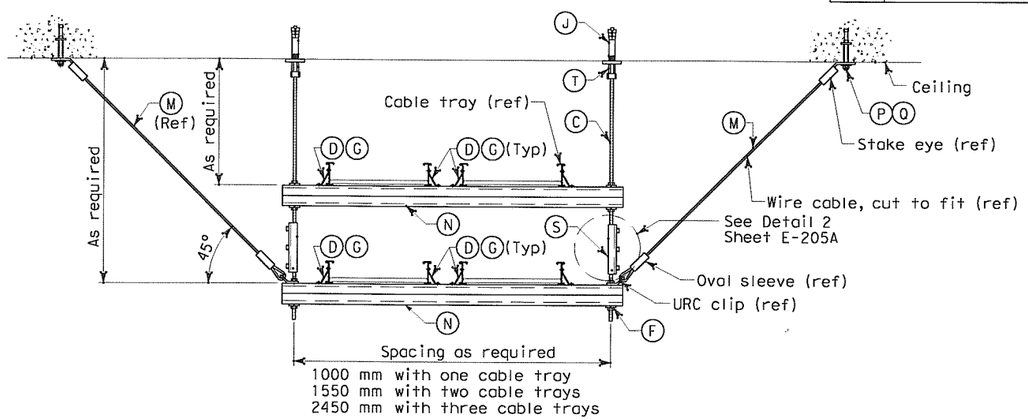

TYPE VC CABLE TRAY SUPPORT ELEVATION

TYPE VD CABLE TRAY SUPPORT ELEVATION WITHOUT (ITEM M) SEISMIC BRACING KIT

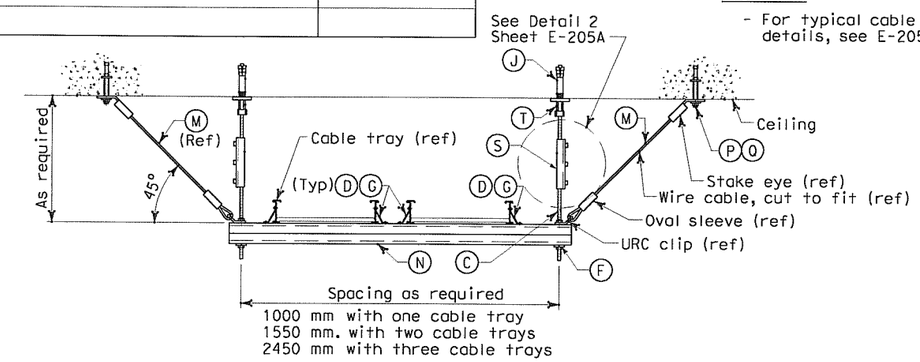

TYPE VA CABLE TRAY SUPPORT ELEVATION

TYPE VB CABLE TRAY SUPPORT ELEVATION WITHOUT (ITEM M) SEISMIC BRACING KIT

Caltrans Metric

DIST	COUNTY	ROUTE	KILOMETER POST TOTAL PROJECT	SHEET NO	TOTAL SHEETS
04	SF	80	13.2/13.9	230 R1	1204

12/19/02
REGISTERED ELECTRICAL ENGINEER DATE

12-6-04
PLANS APPROVAL DATE

REGISTERED PROFESSIONAL ENGINEER JENS ERLINGSSON No. 8249 Exp. 9/30/06 ELECTRICAL STATE OF CALIFORNIA

PB POWER, Inc.
A Parsons Brinckerhoff Company
303 Second St., Suite 700N
San Francisco, CA 94107-1317

The State of California or its officers or agents shall not be responsible for the accuracy or completeness of electronic copies of this plan sheet.

Caltrans now has a web site! To get to the web site, go to http://www.dot.ca.gov

REGISTERED PROFESSIONAL ENGINEER S. A. ESTOOLE, JR. No. E-10151 Exp. 12/31/2008 ELECTRICAL STATE OF CALIFORNIA

FOR REVISION ONLY

REQUEST FOR INFORMATION NOT ADDRESSED IN THIS CCO REMAIN IN FORCE

MARK	DATE	DESCRIPTIONS	BY	CH'D	CCO#
1	02/25/08	CABLE TRAY CHANGES	RG	SE	42S1

REVISIONS

CONTRACT CHANGE ORDER NO. _____
SHEET _____ OF _____

NOTES:

- For typical cable tray attachment details, see E-205A.

CALCULATED/DESIGNED BY RG DATE 08/02 REVISED BY
CHECKED BY ES 08/02 DATE REVISED

DESIGN OVERSIGHT
BEHZAD GOLEMOHAMMADI

STATE OF CALIFORNIA - DEPARTMENT OF TRANSPORTATION
Caltrans

FILE: t:\03\ms\pse\electrical\cont\02ses680.dgn
DATE: 31-Jan-01 16:36

DETAILS
SAS SUPERSTRUCTURE GIRDER EASTBOUND TYPICAL TRAY SUPPORTS
NO SCALE

E-205

LAST REVISION 00-00-00
DATE PLOTTED => 7/11/2008
TIME PLOTTED => 2:55:09 PM

THIS PLAN ACCURATE FOR ELECTRICAL WORK ONLY.

ALL DIMENSIONS ARE IN MILLIMETERS UNLESS OTHERWISE SHOWN

FOR REDUCED PLANS ORIGINAL SCALE IS IN MILLIMETERS 0 20 40 60 80

DGN FILE =>T:\13103\MS\pse\SAS Struc\CCO\SAS CCO42S1\CCO 42S1 Final Submittal 2008-07-11\04-0120f1_0230R01.dgn
USERNAME =>llorico

CU 04251 | EA 0120F1

DIST	COUNTY	ROUTE	KILOMETER POST TOTAL PROJECT	SHEET No.	TOTAL SHEETS
04	SF	80	13.2/13.9	230 S1	1204

REGISTERED ELECTRICAL ENGINEER 2/22/08 DATE

PLANS APPROVAL DATE

REGISTERED PROFESSIONAL ENGINEER S. A. ESTOQUE, JR. No. E-10151 Exp. 12/31/2008 ELECTRICAL STATE OF CALIFORNIA

PB AMERICAS, Inc.
A Parsons Brinckerhoff Company
303 Second St., Suite 700N
San Francisco, CA 94107-1317

The State of California or its officers or agents shall not be responsible for the accuracy or completeness of electronic copies of this plan sheet.

Caltrans now has a web site! To get to the web site, go to http://www.dot.ca.gov

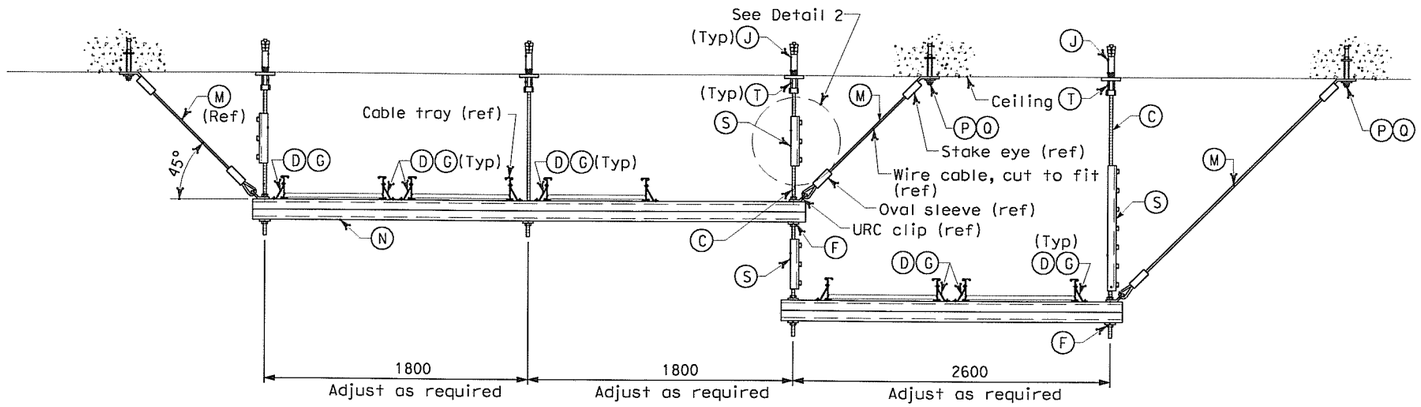

TYPE VE CABLE TRAY SUPPORT ELEVATION

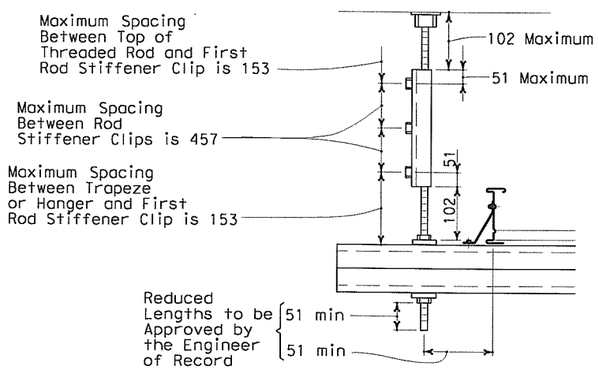

DETAIL 2

MATERIAL LIST

Item No.	Description	Type VA thru VE
A	Deleted	
B	Deleted	
C	Threaded steel hanger rod, 13 mm diameter	X
D	Strut channel spring nut, lock washer and hex bolt	X
E	Hold down clamp Cooper B-Line #9SS6-1205 or equal	X
F	Strut hanger trapeze hardware kit	X
G	Heavy duty hold down clamp Cooper B-Line #9SS6-1241 or equal	X
H	Deleted	
J	Rod hanger expansion anchor, 13 mm dia, 100 mm minimum depth embedment and allowable load (in tension) of 4.45 kN	X
K	Deleted	
L	Deleted	
M	Rod hanger seismic bracing kit (includes 4-stake eyes, 4-oval sleeves, 4-URC clips and 4-3048mm long wire cables) PW Industries part no. PW18-C26-10/C-SP-316SS or equal	X
N	Strut channel, 41 mm x 82 mm (Double)	X
P	Expansion/sleeve anchors 13 mm dia x 76 mm long hex type	X
O	Flat washer 13 mm dia bolt size	X
R	Deleted	
S	Threaded rod (13 mm) with stiffener & stiffener clips	X
T	Rod coupler, hex nut and washer for expansion anchor	X
U	Deleted	
V	Deleted	
W	Deleted	

REQUEST FOR INFORMATION NOT ADDRESSED IN THIS CCO REMAIN IN FORCE

MARK	DATE	DESCRIPTIONS	BY	CH'D	CCO#
0	02/25/08	CABLE TRAY CHANGES	RG	SE	42S1

REVISIONS

CONTRACT CHANGE ORDER NO. _____
SHEET _____ OF _____

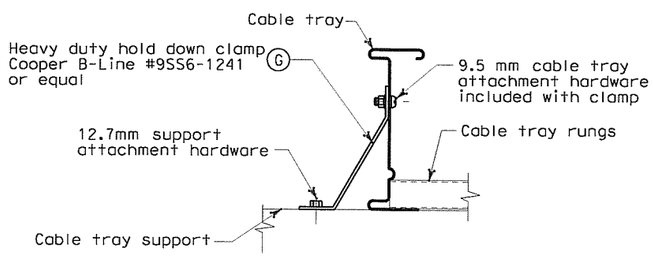

TYPE I

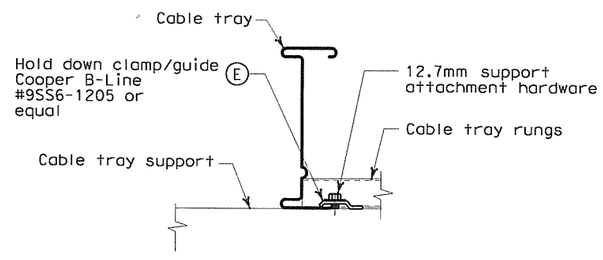

TYPE II
(OPTIONAL)

TYPICAL CABLE TRAY ATTACHMENT

DETAILS
SAS SUPERSTRUCTURE GIRDER EASTBOUND
TYPICAL TRAY SUPPORTS
NO SCALE

E-205A

THIS PLAN ACCURATE FOR ELECTRICAL WORK ONLY.

ALL DIMENSIONS ARE IN MILLIMETERS UNLESS OTHERWISE SHOWN

FOR REDUCED PLANS ORIGINAL SCALE IS IN MILLIMETERS 0 20 40 60 80

DGN FILE =>T:\13103\MS\pse\SAS Struc\CCO\SAS CCO42S1\CCO 42S1 Final Submittal 2008-07-11\04-0120f1_0230S01.dgn
USERNAME =>llorico

CU 04251 EA 0120F1

LAST REVISION 00-00-00 DATE PLOTTED => 7/11/2008 TIME PLOTTED => 2:55:27 PM

STATE OF CALIFORNIA - DEPARTMENT OF TRANSPORTATION
Caltrans

DESIGN OVERSIGHT BEHZAD GOLEMOHAMMADI

CALCULATED/DESIGNED BY RG DATE 07/07 REVISED BY
CHECKED BY ES 07/07 DATE REVISED

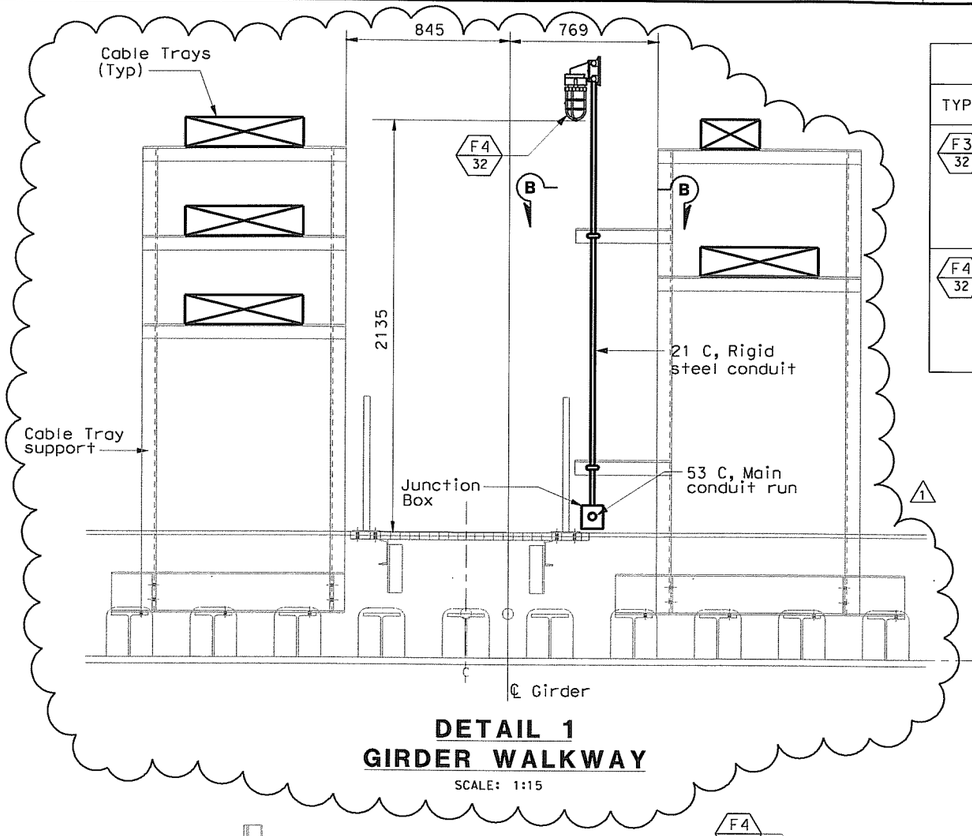

DETAIL 1
GIRDER WALKWAY

SCALE: 1:15

LIGHTING FIXTURE SCHEDULE			
TYPE	INPUT VOLT-AMP	DESCRIPTION	REMARKS
F3 / 32	41	Compact fluorescent fixture, non metallic vaportight housing with guard and clear glass globe, U.L. listed for wet and marine environment, 120 VAC, high frequency ballast and (1) 32 watt CFM32/GX24Q lamp. Suitable for wall mounting.	
F4 / 32	41	Compact fluorescent fixture, non metallic vaportight housing with guard and clear glass globe, U.L. listed for wet and marine environment, 120 VAC, high frequency ballast and (1) 32 watt CFM32/GX24Q lamp. Suitable for stanchion mounting.	

Caltrans Metric

DIST	COUNTY	ROUTE	KILOMETER POST TOTAL PROJECT	SHEET No.	TOTAL SHEETS
04	SF	80	13.2/13.9	231 R1	1204

12/19/02
REGISTERED ELECTRICAL ENGINEER DATE

12-6-04
PLANS APPROVAL DATE

REGISTERED PROFESSIONAL ENGINEER JENS ERLINGSSON No. 8249 Exp. 9/30/06 ELECTRICAL STATE OF CALIFORNIA

PB POWER, Inc.
A Parsons Brinckerhoff Company
303 Second St., Suite 700N
San Francisco, CA 94107-1317

The State of California or its officers or agents shall not be responsible for the accuracy or completeness of electronic copies of this plan sheet.

Caltrans now has a web site! To get to the web site, go to http://www.dot.ca.gov

NOTES:

1. Fittings and mounting hardware shall be stainless steel. For additional requirements, see Electrical Special Provisions.
2. For stanchion mounted light support detail on cable tray support structure, see sheet AS-11. 1

REQUEST FOR INFORMATION NOT ADDRESSED IN THIS CCO REMAIN IN FORCE					
1	02/25/08	CABLE TRAY CHANGES	TW	RG SE	42S1
MARK	DATE	DESCRIPTIONS	BY	CH'D	CCO#
REVISIONS					

CONTRACT CHANGE ORDER NO. _____
SHEET _____ OF _____

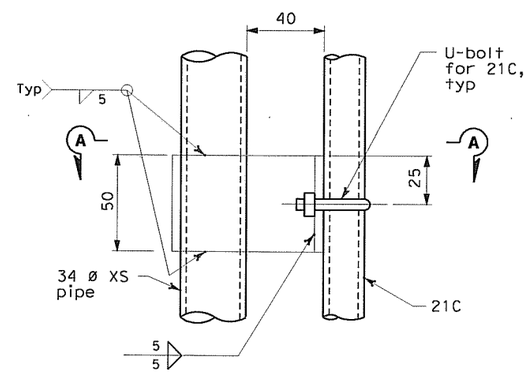

DETAIL 4
NO SCALE

REGISTERED PROFESSIONAL ENGINEER S. A. ESTOQUE, JR. No. E-10151 Exp. 12/31/2008 ELECTRICAL STATE OF CALIFORNIA

FOR REVISION ONLY

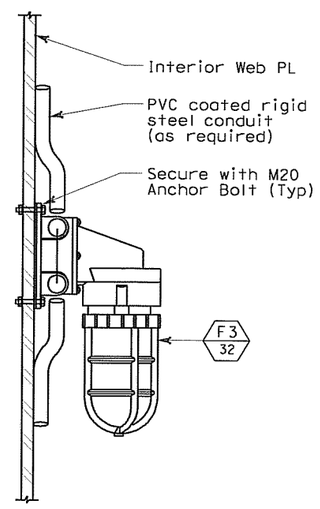

DETAIL 2
ACCESS LIGHTING WALL MOUNTED
NO SCALE

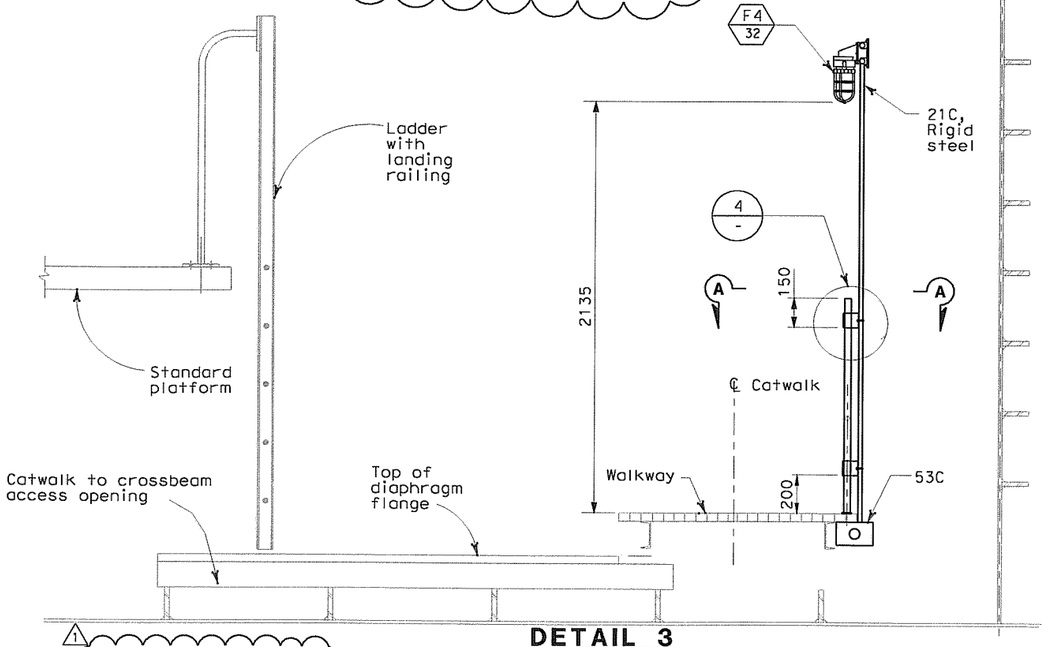

1

DETAIL 3
CROSSBEAM WALKWAY LIGHTING STANCHION MOUNTED
SCALE: 1:15

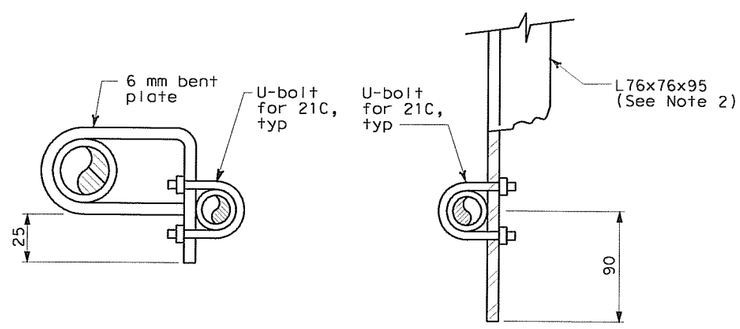

SECTION A-A
NO SCALE

SECTION B-B
NO SCALE

DETAILS
SAS SUPERSTRUCTURE GIRDER EASTBOUND TYPICAL LIGHTING INSTALLATION
SCALE AS NOTED

E-206

THIS PLAN ACCURATE FOR ELECTRICAL WORK ONLY.

ALL DIMENSIONS ARE IN MILLIMETERS UNLESS OTHERWISE SHOWN

FOR REDUCED PLANS ORIGINAL SCALE IS IN MILLIMETERS 0 20 40 60 80

DGN FILE => T:\13103\MS\pse\SAS Struc\CCO\SAS CC042S1\CCO 42S1 Final Submittal 2008-07-11\04-0120f1_0231R01.dgn
USERNAME => llorico

CU 04251 | EA 0120F1

DATE PLOTTED => 7/11/2008
TIME PLOTTED => 2:55:49 PM

LAST REVISION 00-00-00

STATE OF CALIFORNIA - DEPARTMENT OF TRANSPORTATION
Caltrans

DESIGN OVERSIGHT: BEHZAD GOLEMOHAMMADI

CALCULATED/DESIGNED BY: FK | DATE 08/02 | REVISED BY
CHECKED BY: IAH | 08/02 | DATE REVISED

DIST	COUNTY	ROUTE	KILOMETER POST TOTAL PROJECT	SHEET No.	TOTAL SHEETS
04	SF	80	13.2/13.9	232 R1	1204

Jens Erlingsson 11/27/02
REGISTERED ELECTRICAL ENGINEER DATE

REGISTERED PROFESSIONAL ENGINEER JENS ERLINGSSON No. 8249 Exp. 9/30/06 ELECTRICAL STATE OF CALIFORNIA

PLANS APPROVAL DATE

PB POWER, Inc.
A Parsons Brinckerhoff Company
303 Second St., Suite 700N
San Francisco, CA 94107-1317

The State of California or its officers or agents shall not be responsible for the accuracy or completeness of electronic copies of this plan sheet.

Caltrans now has a web site! To get to the web site, go to http://www.dot.ca.gov

Caltrans Metric

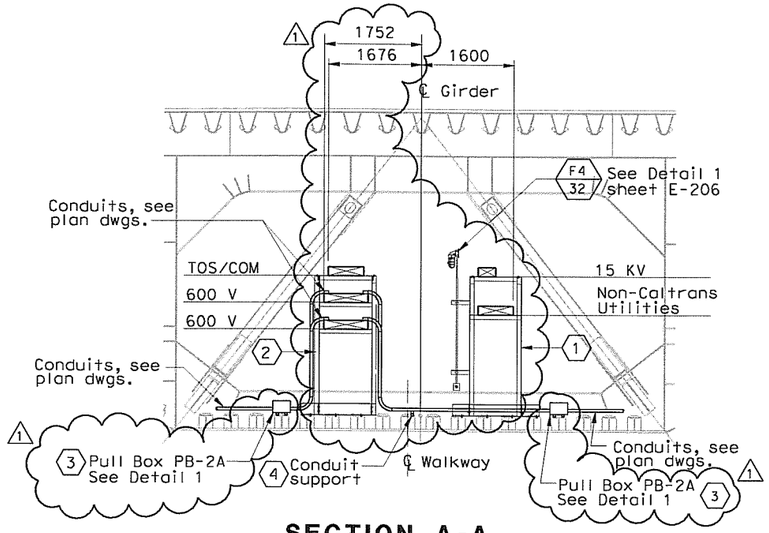

SECTION A-A
(Typical Cable Tray Support and Pull Box location)
Scale 1:15
(E-181, E-207A, E-207B)

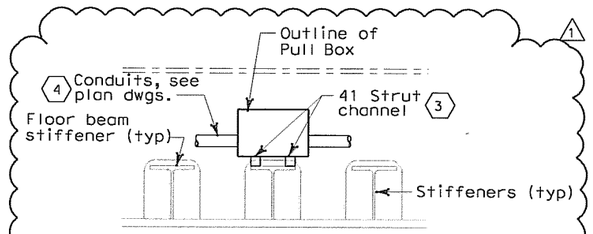

DETAIL 1
(Typical Pull Box support)
NO SCALE

REGISTERED PROFESSIONAL ENGINEER S. A. ESTOQUE, JR. No. E-10151 Exp. 12/31/2008 ELECTRICAL STATE OF CALIFORNIA

FOR REVISION ONLY

REQUEST FOR INFORMATION NOT ADDRESSED IN THIS CCO REMAIN IN FORCE

MARK	DATE	DESCRIPTIONS	BY	CH'D	CCO#
1	02/25/08	CABLE TRAY CHANGES	TW	RG SE	42S1

REVISIONS

CONTRACT CHANGE ORDER NO. _____
SHEET _____ OF _____

SHEET NOTES:

1. Type I, for cable tray supports details, see AS sheets.
2. Type II, for cable tray supports details, see AS sheets.
3. Pull Box PB-2A shall be located on top of stiffener. The Contractor shall provide strut channel for support installed in field.
4. The Contractor shall provide strut channel on top of stiffener for conduit support and installed in field.

DETAILS
SAS SUPERSTRUCTURE GIRDER EASTBOUND
TYPICAL TRAY AND CONDUIT INSTALLATION
SCALE AS NOTED

3 REVISED PER ADDENDUM NO. 3 DATED NOVEMBER 7, 2005

THIS PLAN ACCURATE FOR ELECTRICAL WORK ONLY.

ALL DIMENSIONS ARE IN MILLIMETERS UNLESS OTHERWISE SHOWN.

FOR REDUCED PLANS ORIGINAL SCALE IS IN MILLIMETERS 0 20 40 60 80

DGN FILE => T:\13103\MS\pse\SAS Struc\CCO\SAS CCO42S1\CCO 42S1 Final Submittal 2008-07-11\04-0120F1_0232R01.dgn
USERNAME => llorico

CU 04251 | EA 0120F1

E-207

STATE OF CALIFORNIA - DEPARTMENT OF TRANSPORTATION
Caltrans

DESIGN OVERSIGHT: BEHZAD GOLEMOHAMMADI

CALCULATED/DESIGNED BY | CHECKED BY | DATE | REVISED BY | DATE REVISED

LAST REVISION 00-00-00 | DATE PLOTTED => 7/11/2008 | TIME PLOTTED => 2:56:08 PM

DIST	COUNTY	ROUTE	KILOMETER POST TOTAL PROJECT	SHEET No.	TOTAL SHEETS
04	SF	80	13.2/13.9	232 S1	1204

REGISTERED ELECTRICAL ENGINEER 2/22/08 DATE

REGISTERED PROFESSIONAL ENGINEER S. A. ESTOQUE, JR. No. E-10151 Exp. 12/31/2008 ELECTRICAL STATE OF CALIFORNIA

PLANS APPROVAL DATE

PB AMERICAS, Inc.
A Parsons Brinckerhoff Company
303 Second St., Suite 700N
San Francisco, CA 94107-1317

The State of California or its officers or agents shall not be responsible for the accuracy or completeness of electronic copies of this plan sheet.

Caltrans now has a web site! To get to the web site, go to http://www.dot.ca.gov

Caltrans Metric

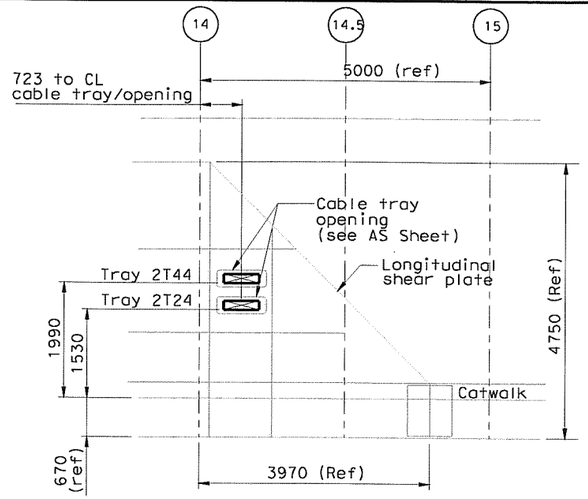

DETAIL 1
Cable pentration thru longitudinal shear plate
Scale 1:50

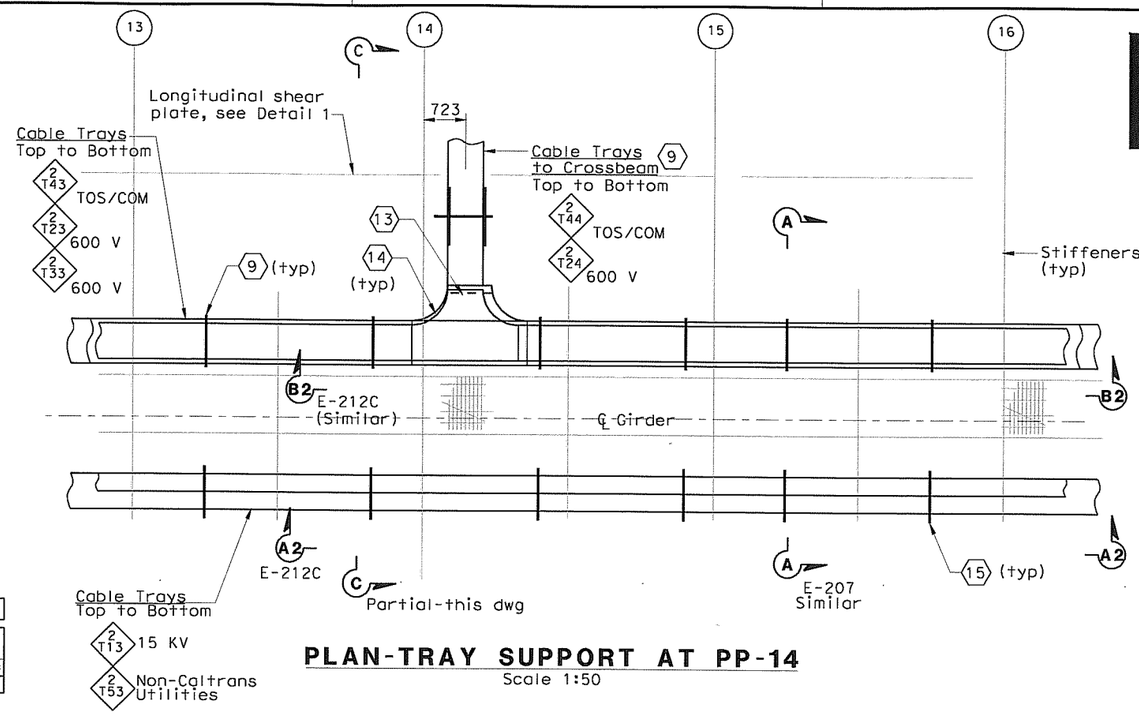

PLAN-TRAY SUPPORT AT PP-14
Scale 1:50

SHEET NOTES:

1. Type I, for cable tray supports details, see AS sheets.
2. Type II, for cable tray supports details, see AS sheets.
3. Type V, for cable tray supports details, see AS sheets.
4. Type VI, for cable tray supports details, see AS sheets.
5. Type VII, for cable tray supports details, see AS sheets.
6. Type VIIA, for cable tray supports details, see AS sheets.
7. Type VIIB, for cable tray supports details, see AS sheets.
8. The Contractor to provide cable tray support at each ends of cable tray fitting as required.
9. For cable tray support see AS-Sheets.
10. Pull Box PB-2A shall be located on top of stiffener. The Contractor shall provide strut channel for support installed in field.
11. The Contractor shall provide strut channel on top of stiffener for conduit support and installed in field.
12. The Contractor to provide insulated grounding bushing at each end of the conduit.
13. The Contractor to provide secondary support installed in field, see detail 2 on dwg E-207D.
14. Cable tray tee fitting shall have 305 mm radius.
15. The Contractor to provide sealant after cables are pulled. Conduits without cables shall have threaded cap at both ends.

REQUEST FOR INFORMATION NOT ADDRESSED IN THIS CCO REMAIN IN FORCE					
0	02/25/08	CABLE TRAY CHANGES	TW	RG SE	42S1
MARK	DATE	DESCRIPTIONS	BY	CH'D	CCO#
		REVISIONS			

CONTRACT CHANGE ORDER NO. _____
SHEET _____ OF _____

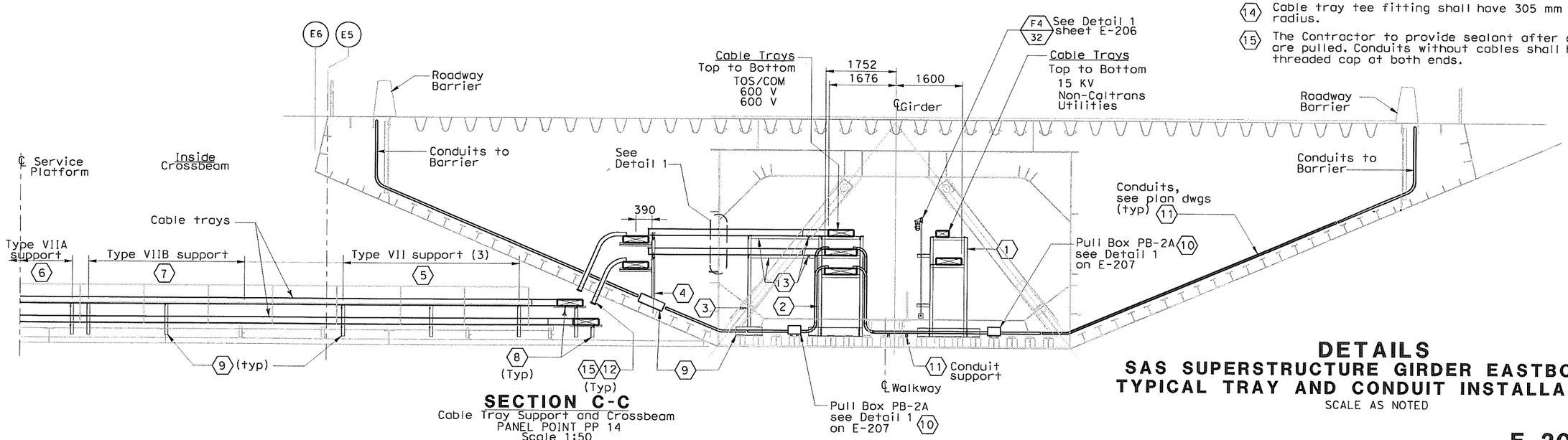

SECTION C-C
Cable Tray Support and Crossbeam
PANEL POINT PP 14
Scale 1:50

DETAILS
SAS SUPERSTRUCTURE GIRDER EASTBOUND TYPICAL TRAY AND CONDUIT INSTALLATION
SCALE AS NOTED

E-207A

THIS PLAN ACCURATE FOR ELECTRICAL WORK ONLY.

ALL DIMENSIONS ARE IN MILLIMETERS UNLESS OTHERWISE SHOWN.

FOR REDUCED PLANS ORIGINAL SCALE IS IN MILLIMETERS 0 20 40 60 80

DGN FILE => T:\13103\MS\pse\SAS Struc\CCO\SAS CCO42S1\CCO 42S1 Final Submittal 2008-07-11\04-0120F1_0232S01.dgn
USERNAME => llorico

CU 04251 | EA 0120F1

LAST REVISION 00-00-00 | DATE PLOTTED => 7/11/2008 TIME PLOTTED => 2:56:42 PM

STATE OF CALIFORNIA - DEPARTMENT OF TRANSPORTATION
Caltrans

DESIGN OVERSIGHT: BEHZAD GOLEMOHAMMADI

CALCULATED/DESIGNED BY | CHECKED BY | REVISED BY | DATE REVISED | DATE

DIST	COUNTY	ROUTE	KILOMETER POST TOTAL PROJECT	SHEET No.	TOTAL SHEETS
04	SF	80	13.2/13.9	232 S2	1204

REGISTERED ELECTRICAL ENGINEER — DATE 2/22/08

REGISTERED PROFESSIONAL ENGINEER S. A. ESTOQUE, JR. No. E-10151 Exp. 12/31/2008 ELECTRICAL STATE OF CALIFORNIA

PLANS APPROVAL DATE

PB AMERICAS, Inc.
A Parsons Brinckerhoff Company
303 Second St., Suite 700N
San Francisco, CA 94107-1317

The State of California or its officers or agents shall not be responsible for the accuracy or completeness of electronic copies of this plan sheet.

Caltrans now has a web site! To get to the web site, go to http://www.dot.ca.gov

Caltrans Metric

REQUEST FOR INFORMATION NOT ADDRESSED IN THIS CCO REMAIN IN FORCE

MARK	DATE	DESCRIPTIONS	BY	CH'D	CCO#
0	02/25/08	CABLE TRAY CHANGES	TW	RG SE	42S1

REVISIONS

CONTRACT CHANGE ORDER NO. _____
SHEET _____ OF _____

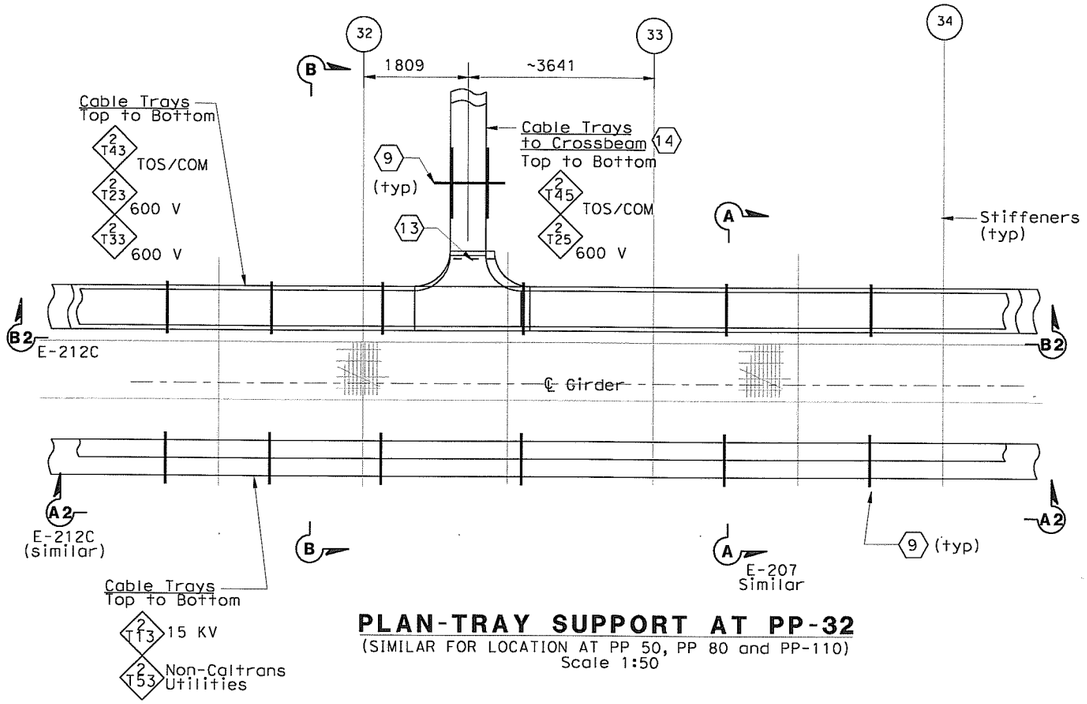

PLAN-TRAY SUPPORT AT PP-32

(SIMILAR FOR LOCATION AT PP 50, PP 80 and PP-110)
Scale 1:50

SHEET NOTES:

1. Type I, for cable tray supports details, see AS sheets.
2. Type II, for cable tray supports details, see AS sheets.
3. Type V, for cable tray supports details, see AS sheets.
4. Type VI, for cable tray supports details, see AS sheets.
5. Type VII, for cable tray supports details, see AS sheets.
6. Type VIIA, for cable tray supports details, see AS sheets.
7. Type VIIB, for cable tray supports details, see AS sheets.
8. The Contractor to provide cable tray support at each ends of cable tray fitting as required.
9. For cable tray support see AS-Sheets.
10. Pull Box PB-2A shall be located on top of stiffener. The Contractor shall provide strut channel for support installed in field.
11. The Contractor shall provide strut channel on top of stiffener for conduit support and installed in field.
12. The Contractor to provide insulated grounding bushing at each end of the conduit.
13. The Contractor to provide secondary support installed in field, see Detail 3 on dwg. E-207D.
14. For cable tray numbers to PP 50, PP 80 and PP 110, see sheet E-114B.
15. The Contractor to provide sealant after cables are pulled. Conduits without cables shall have threaded cap at both ends.

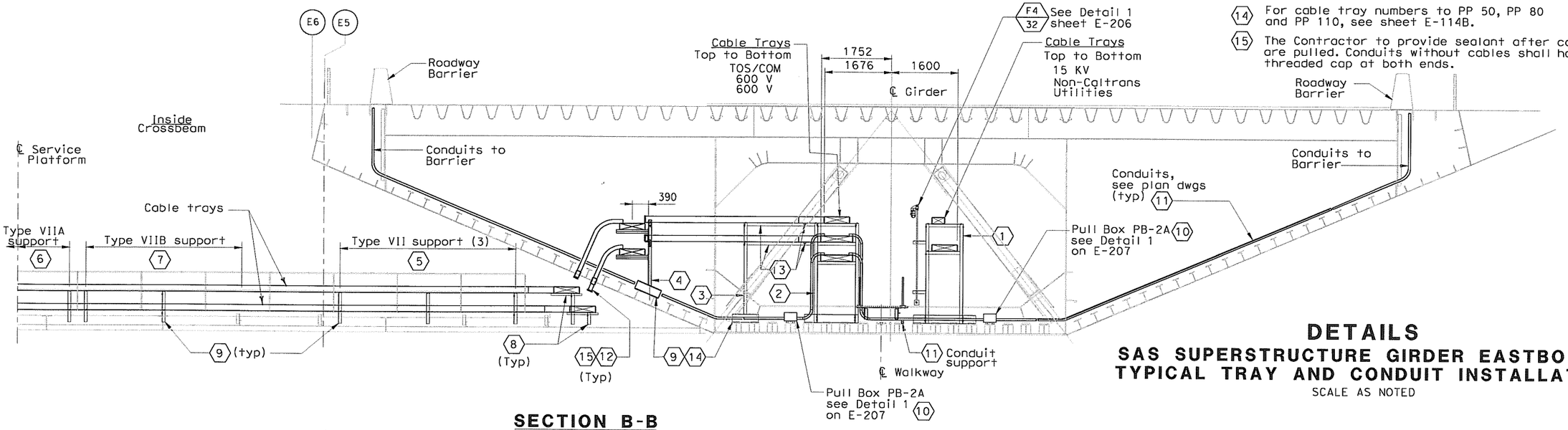

SECTION B-B

(Typical Cable Tray Support and Crossbeam)
PP 32, PP 50, PP 80 and PP-110
Scale 1:50

DETAILS

SAS SUPERSTRUCTURE GIRDER EASTBOUND TYPICAL TRAY AND CONDUIT INSTALLATION

SCALE AS NOTED

THIS PLAN ACCURATE FOR ELECTRICAL WORK ONLY.

ALL DIMENSIONS ARE IN MILLIMETERS UNLESS OTHERWISE SHOWN.

FOR REDUCED PLANS ORIGINAL SCALE IS IN MILLIMETERS 0 20 40 60 80

DGN FILE =>T:\13103\MS\pse\SAS Struc\CCO\SAS CCO42S1\CCO 42S1 Final Submittal 2008-07-11\04-0120f1_0232S02.dgn
USERNAME =>llorico

CU 04251 | EA 0120F1

E-207B

LAST REVISION 00-00-00 | DATE PLOTTED => 7/11/2008 TIME PLOTTED => 2:57:16 PM

STATE OF CALIFORNIA - DEPARTMENT OF TRANSPORTATION
Caltrans

DESIGN OVERSIGHT
BEHZAD GOLEMOHAMMADI

CALCULATED/DESIGNED BY | CHECKED BY | DATE | REVISED BY | DATE REVISED

DIST	COUNTY	ROUTE	KILOMETER POST TOTAL PROJECT	SHEET NO.	TOTAL SHEETS
04	SF	80	13.2/13.9	232 S3	1204

REGISTERED ELECTRICAL ENGINEER — 2/22/08 DATE

PLANS APPROVAL DATE

REGISTERED PROFESSIONAL ENGINEER S. A. ESTOQUE, JR. No. E-10151 Exp. 12/31/2008 ELECTRICAL STATE OF CALIFORNIA

PB AMERICAS, Inc.
A Parsons Brinckerhoff Company
303 Second St., Suite 700N
San Francisco, CA 94107-1317

The State of California or its officers or agents shall not be responsible for the accuracy or completeness of electronic copies of this plan sheet.

To get to the web site, go to: http://www.dot.ca.gov

Caltrans Metric

MARK	DATE	DESCRIPTIONS	BY	CH'D	CCO#
0	02/25/08	CABLE TRAY CHANGES	MP	SE RG	4251

REVISIONS

REQUEST FOR INFORMATION NOT ADDRESSED IN THIS CCO REMAIN IN FORCE

CONTRACT CHANGE ORDER NO. _____
SHEET ____ OF ____

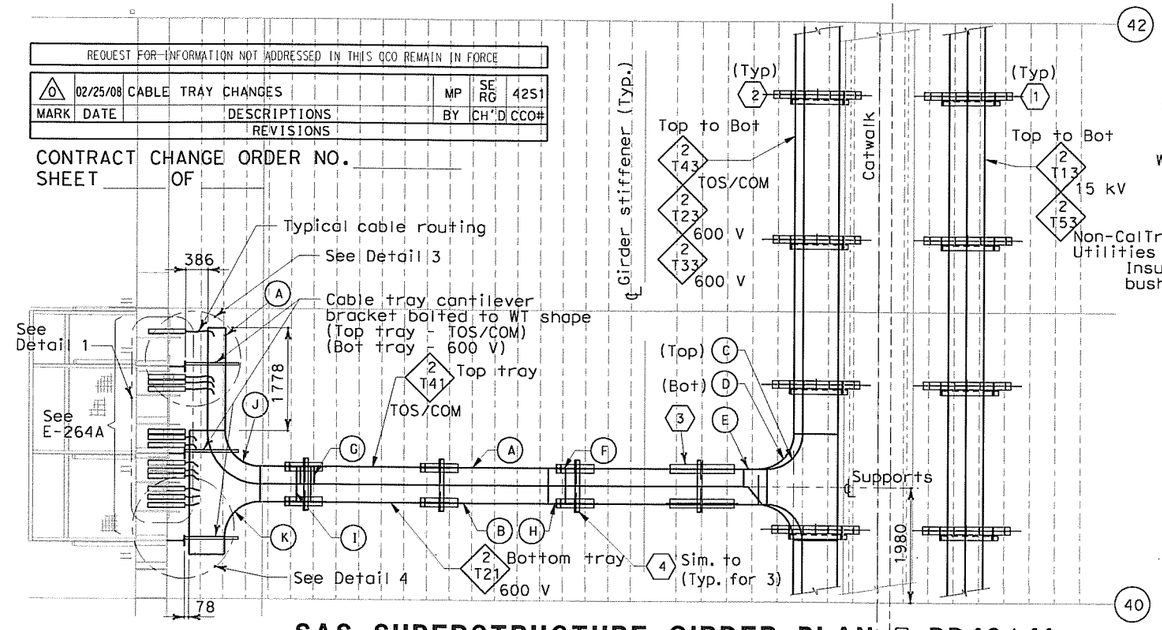

SAS SUPERSTRUCTURE GIRDER PLAN @ PP40/41

SCALE 1:50

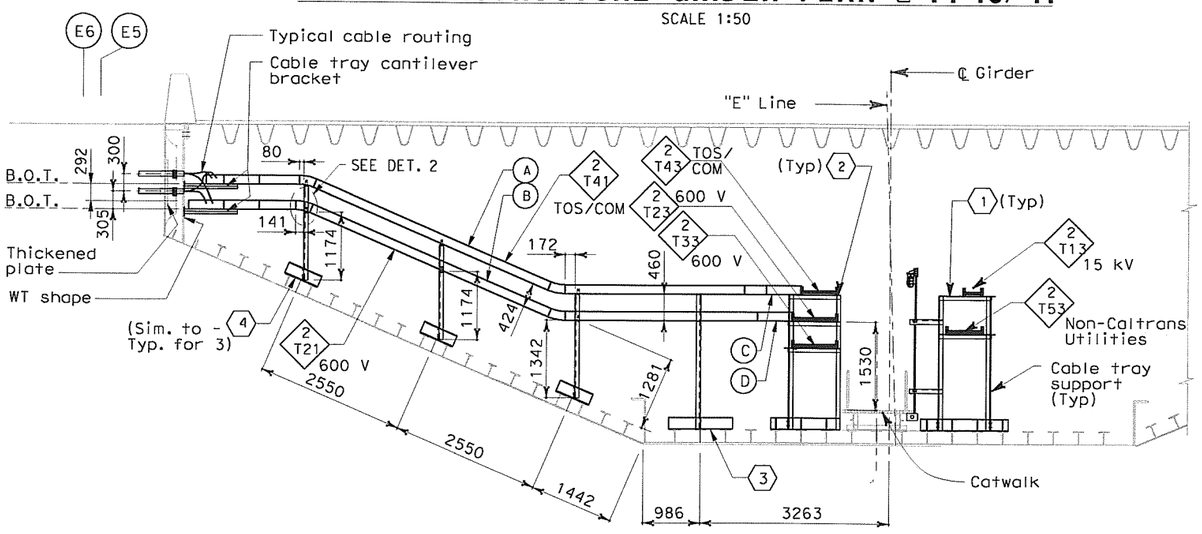

SAS SUPERSTRUCTURE GIRDER SECTION @ PP40/41

SCALE 1:50

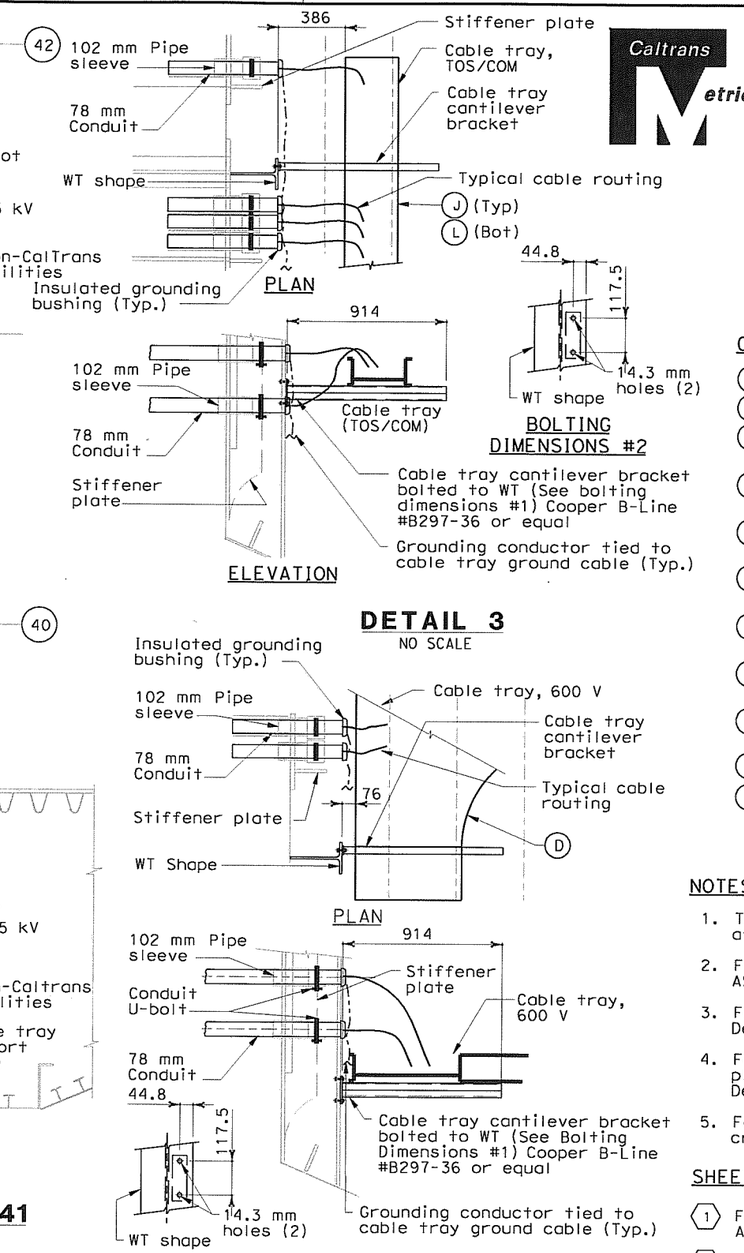

DETAIL 3

NO SCALE

DETAIL 4

NO SCALE

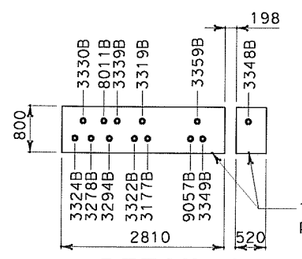

DETAIL 1

(FOR REFERENCE ONLY)
NO SCALE

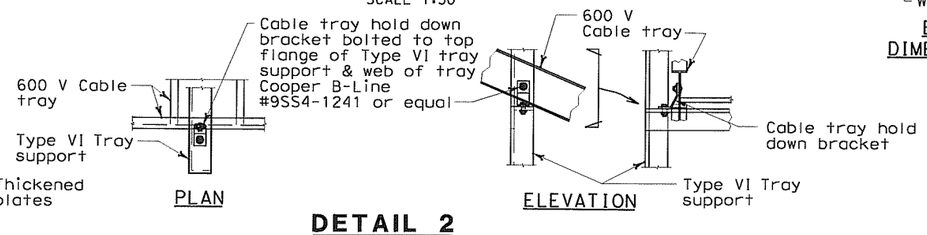

DETAIL 2

*Shown for 600 V tray. (TOS/COM tray support similar)
NO SCALE

CABLE TRAY COMPONENTS:

- (A) 305 mm Solid trough cable tray
- (B) 610 mm Ladder type cable tray
- (C) 610 mm x 610 mm Solid trough cable tray tee
- (D) 760 mm x 610 mm Ladder type cable tray reducing tee
- (E) 610 mm-to-305 mm Solid trough cable tray right reducer
- (F) 305 mm Solid trough cable tray 30° vertical inside bend
- (G) 305 mm Solid trough cable tray 30° vertical outside bend
- (H) 610 mm Ladder type cable tray 30° vertical inside bend
- (I) 610 mm Ladder type cable tray 30° vertical outside bend
- (J) 305 mm Solid trough cable tray 90° elbow
- (K) 610 mm x 610 mm Ladder type cable tray tee

NOTES:

1. Transverse support beam shall be located at 1250 mm from floorbeam.
2. For PB-2A support details, see AS-drawings.
3. For details not shown, see Girder Access Details No. 2 sheet.
4. For location of pipe sleeves at the utility platform crossbeams, see Typical Crossbeam Details sheets.
5. For details of pipe sleeves at all other crossbeams, see Utility Details sheets.

SHEET NOTES:

(1) For Type I cable tray support details, see AS-sheets.

(2) For Type II cable tray support details, see AS-sheets.

(3) For Type V cable tray support details, see AS-sheets.

(4) For Type VI cable tray support details, see AS-sheets.

DETAILS
SAS SUPERSTRUCTURE GIRDER EASTBOUND TYPICAL TRAY AND CONDUIT INSTALLATION

SCALE AS SHOWN

E-207C

REVISED BY	DATE	DATE REVISED

CALCULATED/DESIGNED BY	CHECKED BY

DESIGN OVERSIGHT: BEHZAD GOLEMOHAMMADI

STATE OF CALIFORNIA - DEPARTMENT OF TRANSPORTATION — Caltrans

THIS PLAN ACCURATE FOR ELECTRICAL WORK ONLY.

ALL DIMENSIONS ARE IN MILLIMETERS UNLESS OTHERWISE SHOWN

FOR REDUCED PLANS ORIGINAL SCALE IS IN MILLIMETERS 0 20 40 60 80

DGN FILE => T:\13103\MS\pse\SAS Struc\CCO\SAS CC042S1\CCO 42S1 Final Submittal 2008-07-11\04-0120f1_0232S03.dgn
USERNAME => llorico

CU 04251 | EA 0120F1

LAST REVISION 00-00-00 | DATE PLOTTED => 7/11/2008 | TIME PLOTTED => 2:57:34 PM

DIST	COUNTY	ROUTE	KILOMETER POST TOTAL PROJECT	SHEET No	TOTAL SHEETS
04	SF	80	13.2/13.9	232 S4	1204

REGISTERED ELECTRICAL ENGINEER 2/22/08 DATE

REGISTERED PROFESSIONAL ENGINEER S. A. ESTOOLE, JR. No. E-10151 Exp. 12/31/2008 ELECTRICAL STATE OF CALIFORNIA

PLANS APPROVAL DATE

PB AMERICAS, Inc.
A Parsons Brinckerhoff Company
303 Second St., Suite 700N
San Francisco, CA 94107-1317

The State of California or its officers or agents shall not be responsible for the accuracy or completeness of electronic copies of this plan sheet.

Caltrans now has a web site! To get to the web site, go to http://www.dot.ca.gov

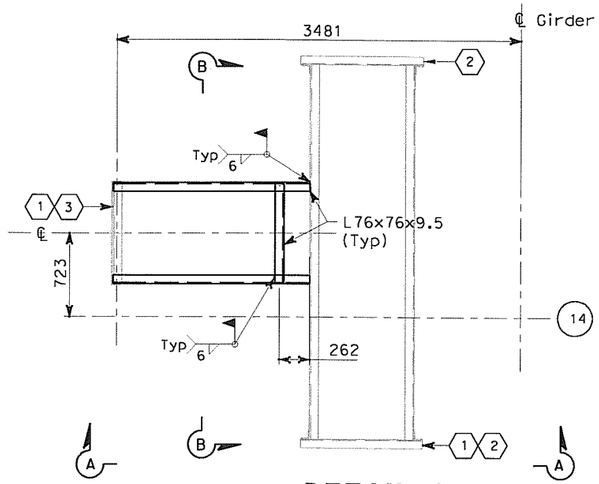

DETAIL 2
(Field Cable Tray Support to Crossbeam PP-14)
Scale 1:50

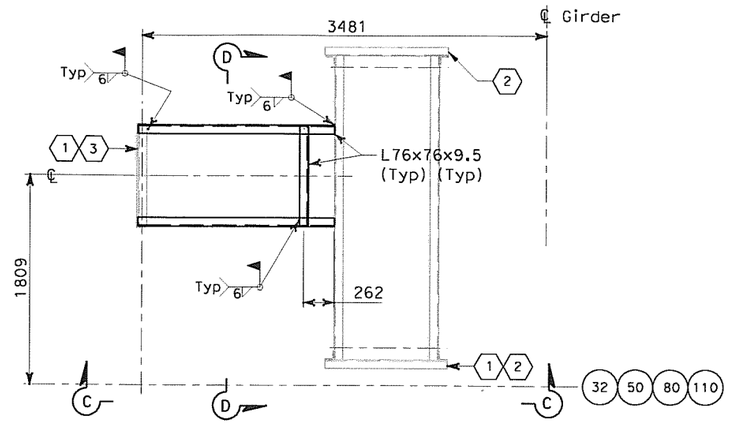

DETAIL 3
(Typical Field Cable tray Support to Crossbeam PP-32, PP-50, PP-80 and PP-110)
Scale 1:50

SHEET NOTES:

1. For cable tray support see AS-16K, AS-16L, AS-16M, AS-16N AND AS-16P.
2. Type II, for cable tray supports details, see AS-11.
3. Type V, for cable tray supports details, see AS-14.

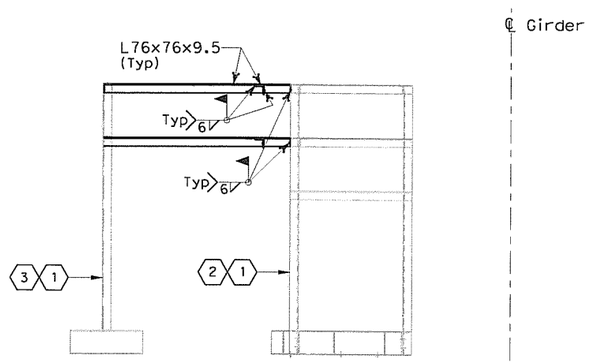

SECTION A-A
Scale 1:50

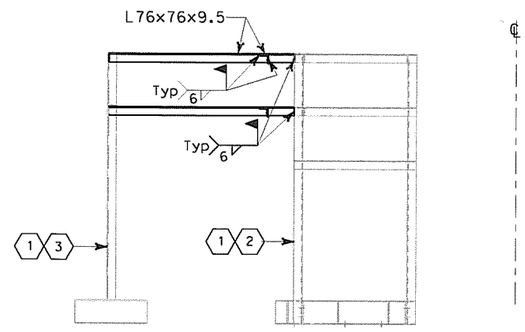

SECTION C-C
Scale 1:50

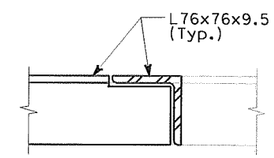

DETAIL 4
No Scale

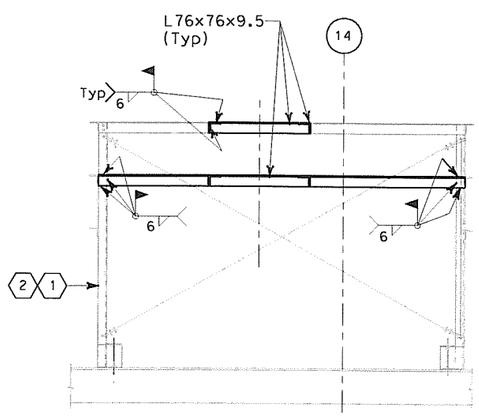

SECTION B-B
Scale 1:50

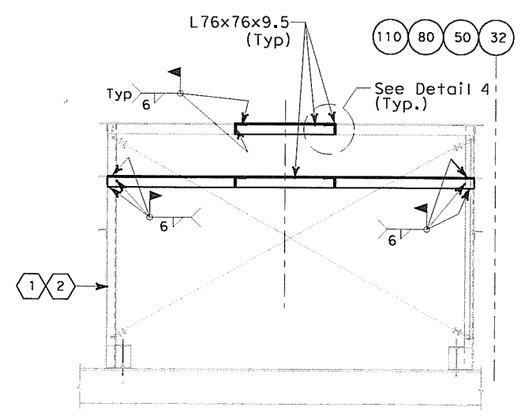

SECTION D-D
Scale 1:50

REQUEST FOR INFORMATION NOT ADDRESSED IN THIS CCO REMAIN IN FORCE

MARK	DATE	DESCRIPTIONS	BY	CH'D	CCO#
0	02/25/08	CABLE TRAY CHANGES	TW	SE RG	42S1

REVISIONS

CONTRACT CHANGE ORDER NO. _____
SHEET _____ OF _____

DETAILS
SAS SUPERSTRUCTURE GIRDER EASTBOUND TYPICAL TRAY AND CONDUIT INSTALLATION
SCALE AS NOTED

E-207D

THIS PLAN ACCURATE FOR ELECTRICAL WORK ONLY.

ALL DIMENSIONS ARE IN MILLIMETERS UNLESS OTHERWISE SHOWN

FOR REDUCED PLANS ORIGINAL SCALE IS IN MILLIMETERS 0 20 40 60 80

DGN FILE => T:\13103\MS\pse\SAS Struc\CCO\SAS CCO42S1\CCO 42S1 Final Submittal 2008-07-11\04-0120F1_0232S04.dgn
USERNAME => llorico

CU 04251 | EA 0120F1

DATE PLOTTED => 7/11/2008
TIME PLOTTED => 2:57:50 PM

LAST REVISION 00-00-00

STATE OF CALIFORNIA - DEPARTMENT OF TRANSPORTATION
Caltrans

DESIGN OVERSIGHT
BEHZAD GOLEMOHAMMADI

CALCULATED/DESIGNED BY
CHECKED BY

DATE
REVISED BY
DATE REVISED

DIST	COUNTY	ROUTE	KILOMETER POST TOTAL PROJECT	SHEET No	TOTAL SHEETS
04	SF	80	13.2/13.9	233 R2	1204

Caltrans Metric

12/19/02
REGISTERED ELECTRICAL ENGINEER DATE

12-6-04
PLANS APPROVAL DATE

REGISTERED PROFESSIONAL ENGINEER JENS ERLINGSSON No. 8249 Exp. 9/30/06 ELECTRICAL STATE OF CALIFORNIA

PB POWER, Inc.
A Parsons Brinckerhoff Company
303 Second St., Suite 700N
San Francisco, CA 94107-1317

The State of California or its officers or agents shall not be responsible for the accuracy or completeness of electronic copies of this plan sheet.

Caltrans now has a web site! To get to the web site, go to http://www.dot.ca.gov

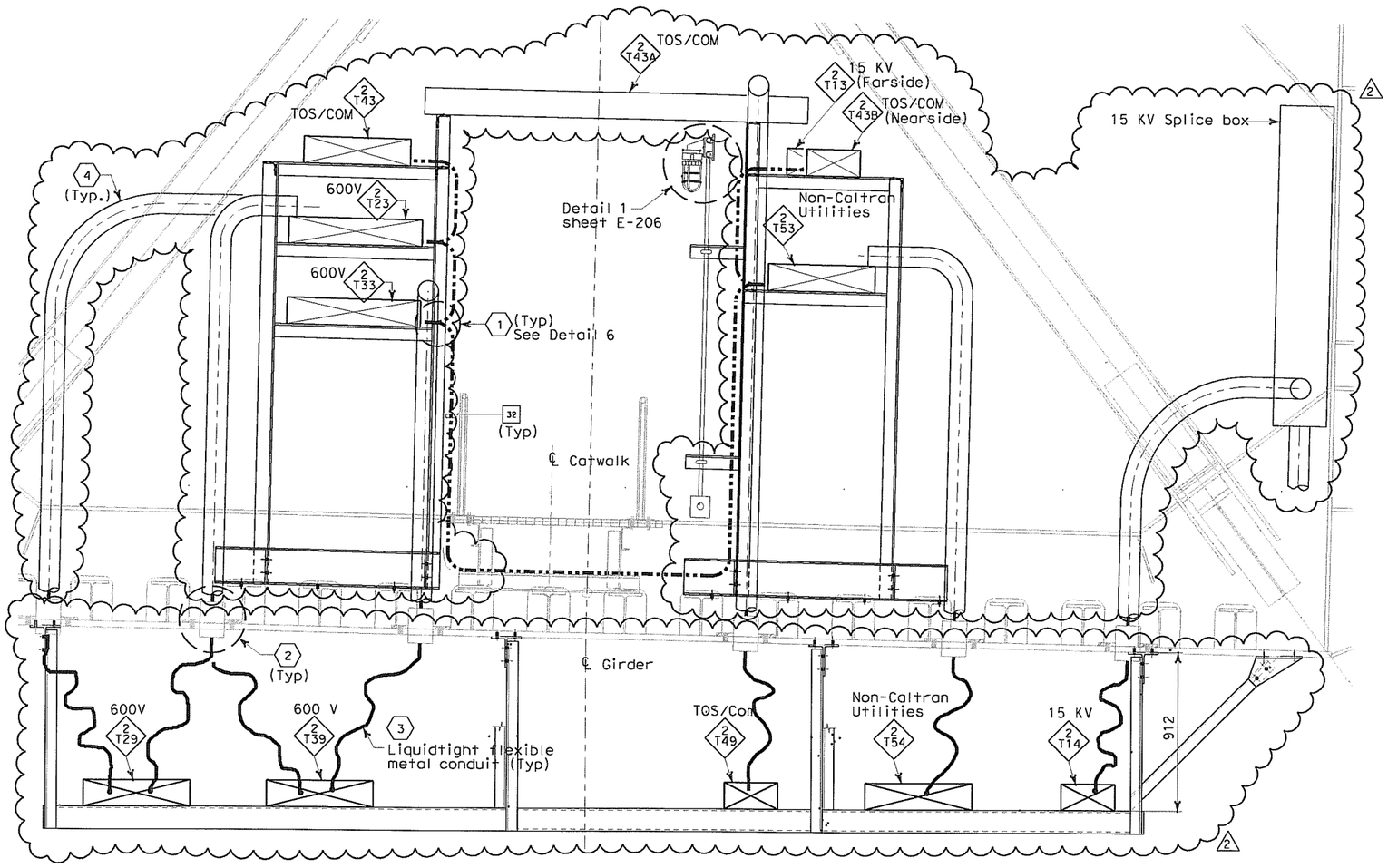

SECTION E-E - TYPICAL CABLE TRAY SUPPORT

SCALE: 1:15

SHEET NOTES:

1. Provide connections to 500 kcmil system ground for all cable trays, every 200 meters.
2. For location of conduit penetrations thru girder plate, see Utility Detail No. 1 and Utility Layout sheets respectively. To prevent moisture from passing inside the sleeve, Contractor shall install sealant after conduit have been installed. Spares shall be plugged and capped.
3. For installation detail of liquidtight flexible metal conduits below girder, see sheet E-212.
4. For installation detail of conduits inside girder, see sheet E-212B.

NOTES:

1. See structural drawings for Catwalk Support Details.
2. For SAS Superstructure Girder access detail #2, see structural dwgs.
3. Ground cable shall be installed along full length of the 15 kV cable tray only.
4. For typical cable tray support details, see AS-sheets.

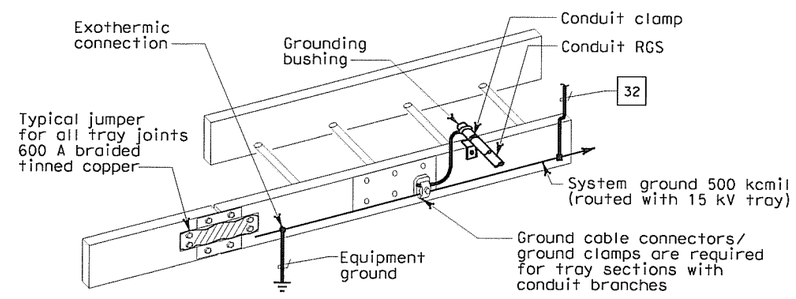

GROUNDING OF METALLIC RACEWAYS

DETAIL 6

REGISTERED PROFESSIONAL ENGINEER S. A. ESTOQUE, JR No. E-10151 Exp. 12/31/2008 ELECTRICAL STATE OF CALIFORNIA

FOR REVISION ONLY

REQUEST FOR INFORMATION NOT ADDRESSED IN THIS CCO REMAIN IN FORCE

MARK	DATE	DESCRIPTIONS	BY	CH'D	CCO#
2	02/25/08	CABLE TRAY CHANGES	RG	SE	42S1
1	01/10/06	REVISED NOTE. BIDDER INQUIRY #330	CR	JE	11

REVISIONS

CONTRACT CHANGE ORDER NO. _____
SHEET _____ OF _____

DETAILS
SAS SUPERSTRUCTURE GIRDER EASTBOUND
TYPICAL CABLE TRAY AND GROUNDING INSTALLATION 2

SCALE AS NOTED

E-208

STATE OF CALIFORNIA - DEPARTMENT OF TRANSPORTATION
Caltrans

DESIGN OVERSIGHT: BEHZAD GOLEMOHAMMADI
CALCULATED/DESIGNED BY: EDC DATE 08/02 REVISED BY
CHECKED BY: CYF 3/04 DATE REVISED

THIS PLAN ACCURATE FOR ELECTRICAL WORK ONLY.

ALL DIMENSIONS ARE IN MILLIMETERS UNLESS OTHERWISE SHOWN

FOR REDUCED PLANS ORIGINAL SCALE IS IN MILLIMETERS 0 20 40 60 80

DGN FILE =>T:\13103\MS\pse\SAS Struc\CCO\SAS CC042S1\CCO 42S1 Final Submittal 2008-07-11\04-0120f1_0233R02.dgn
USERNAME =>llorico

CU 04251 EA 0120F1

LAST REVISION 00-00-00 DATE PLOTTED => 7/11/2008 TIME PLOTTED => 2:58:11 PM

DIST	COUNTY	ROUTE	KILOMETER POST TOTAL PROJECT	SHEET No	TOTAL SHEETS
04	SF	80	13.2/13.9	234 R1	1204

Jens Erlingsson 12/19/02
REGISTERED ELECTRICAL ENGINEER DATE

12-6-04
PLANS APPROVAL DATE

REGISTERED PROFESSIONAL ENGINEER JENS ERLINGSSON No. 8249 Exp. 9/30/06 ELECTRICAL STATE OF CALIFORNIA

PB POWER, Inc.
A Parsons Brinckerhoff Company
303 Second St., Suite 700N
San Francisco, CA 94107-1317

The State of California or its officers or agents shall not be responsible for the accuracy or completeness of electronic copies of this plan sheet.

Caltrans now has a web site! To get to the web site, go to http://www.dot.ca.gov

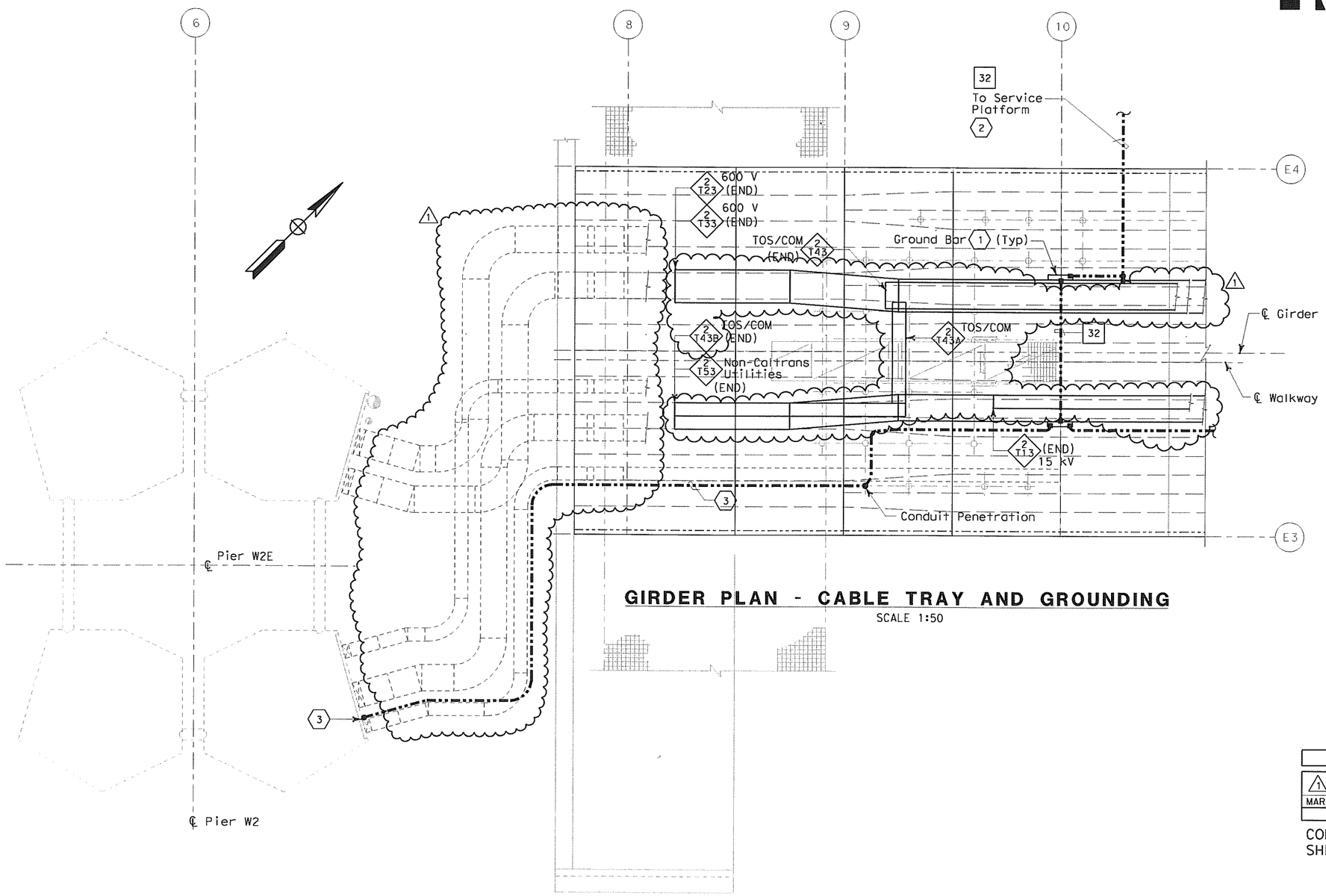

GIRDER PLAN - CABLE TRAY AND GROUNDING

SCALE 1:50

SHEET NOTES:

1. Ground bar detail see sheet E-208.
2. For actual conduit locations, see Girder Level, Cable Tray and conduits plans. See sheets E-181 thru E-186.
3. 500 kcmil bare copper ground cable run along with tray at column to pier footing collar.

REGISTERED PROFESSIONAL ENGINEER S. A. ESTOQUE, JR No. E-10151 Exp. 12/31/2008 ELECTRICAL STATE OF CALIFORNIA

FOR REVISION ONLY

REQUEST FOR INFORMATION NOT ADDRESSED IN THIS CCO REMAIN IN FORCE

MARK	DATE	DESCRIPTIONS	BY	CH'D	CCO#
1	02/25/08	CABLE TRAY CHANGES	RG	SE	42S1

REVISIONS

CONTRACT CHANGE ORDER NO. _____
SHEET _____ OF _____

DETAILS
SAS SUPERSTRUCTURE GIRDER EASTBOUND
TYPICAL TRAY AND GROUNDING INSTALLATION AT PIERS W2E

SCALE AS NOTED

E-211

THIS PLAN ACCURATE FOR ELECTRICAL WORK ONLY.

ALL DIMENSIONS ARE IN MILLIMETERS UNLESS OTHERWISE SHOWN.

FOR REDUCED PLANS ORIGINAL SCALE IS IN MILLIMETERS 0 20 40 60 80

DGN FILE =>T:\13103\MS\pse\SAS Struc\CCO\SAS CCO42S1\CCO 42S1 Final Submittal 2008-07-11\04-0120f1_0234R01.dgn
USERNAME =>llorico

CU 04251 EA 0120F1

LAST REVISION 00-00-00
DATE PLOTTED => 7/11/2008
TIME PLOTTED => 2:58:31 PM

STATE OF CALIFORNIA - DEPARTMENT OF TRANSPORTATION
Caltrans

DESIGN OVERSIGHT
BEHZAD GOLEMOHAMMADI

CALCULATED/ DESIGNED BY	EDC	DATE 08/02	REVISED BY
CHECKED BY	CYF	08/02	DATE REVISED

DIST	COUNTY	ROUTE	KILOMETER POST TOTAL PROJECT	SHEET No.	TOTAL SHEETS
04	SF	80	13.2/13.9	235 R1	1204

12/19/02
REGISTERED ELECTRICAL ENGINEER DATE

12-6-04
PLANS APPROVAL DATE

REGISTERED PROFESSIONAL ENGINEER JENS ERLINGSSON No. 8249 Exp. 9/30/06 ELECTRICAL STATE OF CALIFORNIA

PB POWER, Inc.
A Parsons Brinckerhoff Company
303 Second St., Suite 700N
San Francisco, CA 94107-1317

The State of California or its officers or agents shall not be responsible for the accuracy or completeness of electronic copies of this plan sheet.

Caltrans now has a web site! To get to the web site, go to http://www.dot.ca.gov

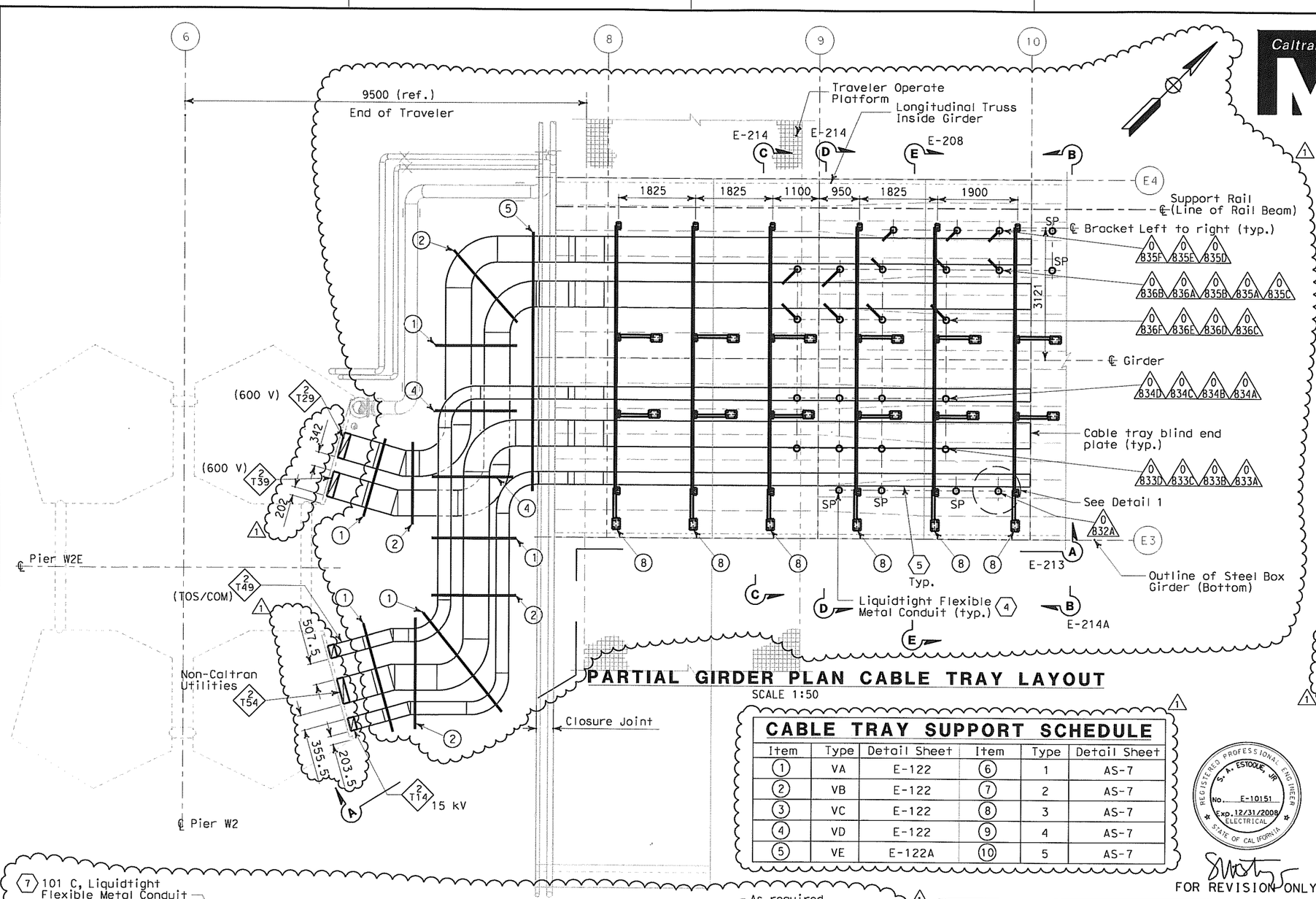

PARTIAL GIRDER PLAN CABLE TRAY LAYOUT

SCALE 1:50

CABLE TRAY SUPPORT SCHEDULE

Item	Type	Detail Sheet	Item	Type	Detail Sheet
1	VA	E-122	6	1	AS-7
2	VB	E-122	7	2	AS-7
3	VC	E-122	8	3	AS-7
4	VD	E-122	9	4	AS-7
5	VE	E-122A	10	5	AS-7

SHEET NOTES:

1. For cable tray supports details, see Cable Tray Support Schedule table.
2. Cable trays shall be as specified per specification unless noted otherwise.
3. Cable and location of penetrations thru girder plate, see Utility Detail No. 1 and Utility Layout respectively of Superstructure and Tower Drawings. To prevent moisture from entering girder, contractor to seal the space between sleeves and conduits. Spare pipe sleeves shall be provided with threaded cap at exterior end.
4. For continuation of conduit to cable trays inside OBG see E-212A.
5. Cable trays shall be anchored to supports and shall have solid cover with heavy duty cover clamps.
6. Install neoprene rubber around cable tray cover opening for protection to liquidtight flexible metal conduits as it enter the cable tray. Seal opening as needed.
7. Liquidtight flexible metal conduits shall be anchored to supports or cable trays.
8. Contractor may adjust the location of cable tray supports below W2 Pier Cap Beam to suit field condition and provide additional seismic bracing as required.

NOTES:

1. References:
   - For circuit and conduit/cable tray schedules, see sheets starting at E-401.
   - For locations of cable tray support embeds, see AS sheets.
2. For other related work, not shown on this sheet, see Electrical Special Provisions.
3. For actual conduit locations, see girder level, cable tray and conduits plans. See sheets E-181 thru E-186.
4. 500 kcmil bare copper ground cable run along with tray at column to pier footing collar.
5. Ground bar detail see sheet E-208.

REGISTERED PROFESSIONAL ENGINEER S. A. ESTOQUE, JR. No. E-10151 Exp. 12/31/2008 ELECTRICAL STATE OF CALIFORNIA

FOR REVISION ONLY

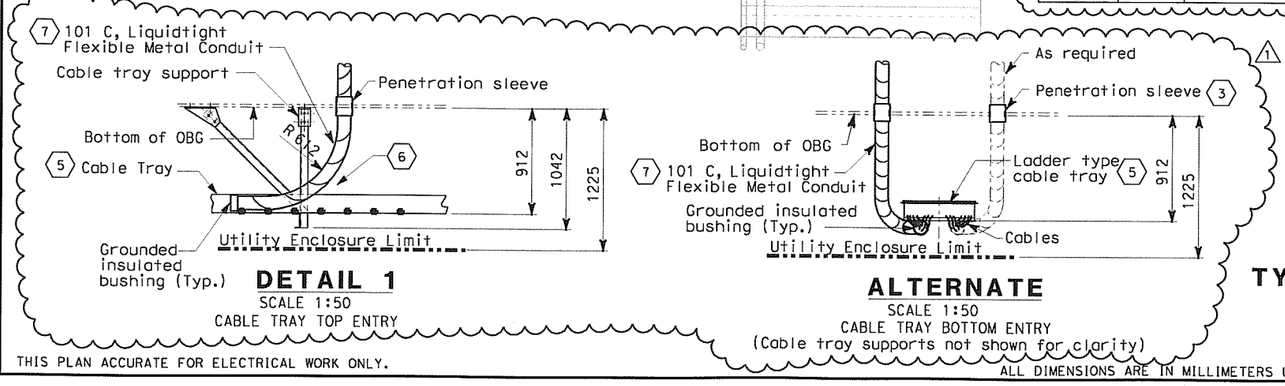

DETAIL 1
SCALE 1:50
CABLE TRAY TOP ENTRY

ALTERNATE
SCALE 1:50
CABLE TRAY BOTTOM ENTRY
(Cable tray supports not shown for clarity)

REQUEST FOR INFORMATION NOT ADDRESSED IN THIS CCO REMAIN IN FORCE

MARK	DATE	DESCRIPTIONS	BY	CH'D	CCO#
1	02/25/08	CABLE TRAY CHANGES	RG	SE	42S1

REVISIONS

CONTRACT CHANGE ORDER NO. _____
SHEET _____ OF _____

DETAILS
SAS SUPERSTRUCTURE GIRDER EASTBOUND
TYPICAL CABLE TRAY AND CONDUIT INSTALLATION AT PIER W2E

SCALE AS NOTED

THIS PLAN ACCURATE FOR ELECTRICAL WORK ONLY.

ALL DIMENSIONS ARE IN MILLIMETERS UNLESS OTHERWISE SHOWN.

FOR REDUCED PLANS ORIGINAL SCALE IS IN MILLIMETERS 0 20 40 60 80

DGN FILE => T:\13103\MS\pse\SAS Struc\CCO\SAS CCO42S1\CCO 42S1 Final Submittal 2008-07-11\04-0120f1_0235R01.dgn
USERNAME => llorico

CU 04251 | EA 0120F1

E-212

LAST REVISION 00-00-00
DATE PLOTTED => 7/11/2008
TIME PLOTTED => 2:58:47 PM

STATE OF CALIFORNIA - DEPARTMENT OF TRANSPORTATION
Caltrans

DESIGN OVERSIGHT
BEHZAD GOLEMOHAMMADI

CALCULATED/ DESIGNED BY	EDC	DATE 08/02	REVISED BY
CHECKED BY	CYF	08/02	DATE REVISED

DIST	COUNTY	ROUTE	KILOMETER POST TOTAL PROJECT	SHEET No	TOTAL SHEETS
04	SF	80	13.2/13.9	235 S1	1204

REGISTERED ELECTRICAL ENGINEER 2/22/08 DATE

PLANS APPROVAL DATE

REGISTERED PROFESSIONAL ENGINEER S. A. ESTOQUE, JR. No. E-10151 Exp. 12/31/2008 ELECTRICAL STATE OF CALIFORNIA

PB AMERICAS, Inc.
A Parsons Brinckerhoff Company
303 Second St., Suite 700N
San Francisco, CA 94107-1317

The State of California or its officers or agents shall not be responsible for the accuracy or completeness of electronic copies of this plan sheet.

Caltrans now has a web site! To get to the web site, go to http://www.dot.ca.gov

Caltrans Metric

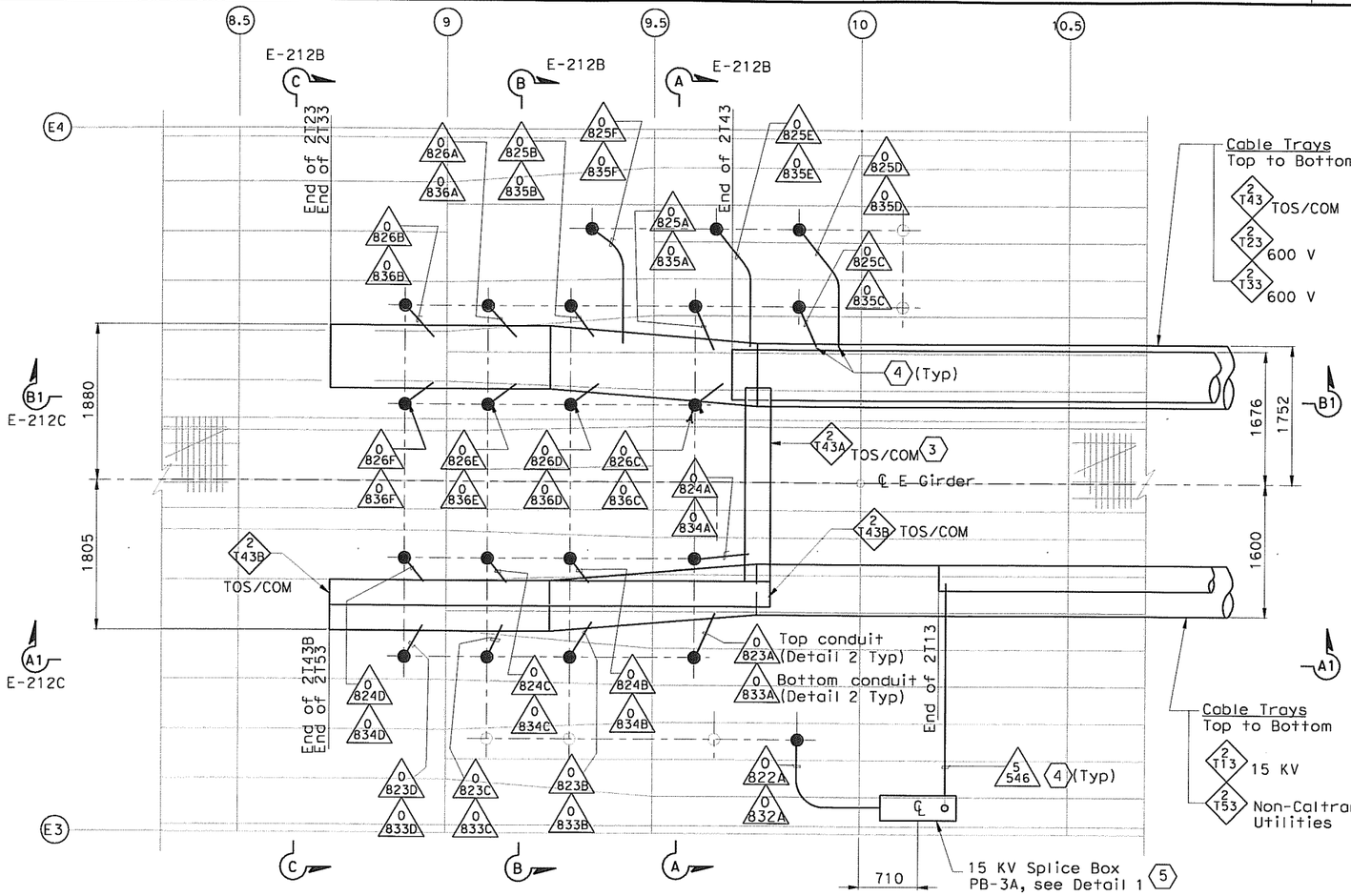

PARTIAL GIRDER-CABLE TRAY PLAN (6)

SCALE 1:1.5x

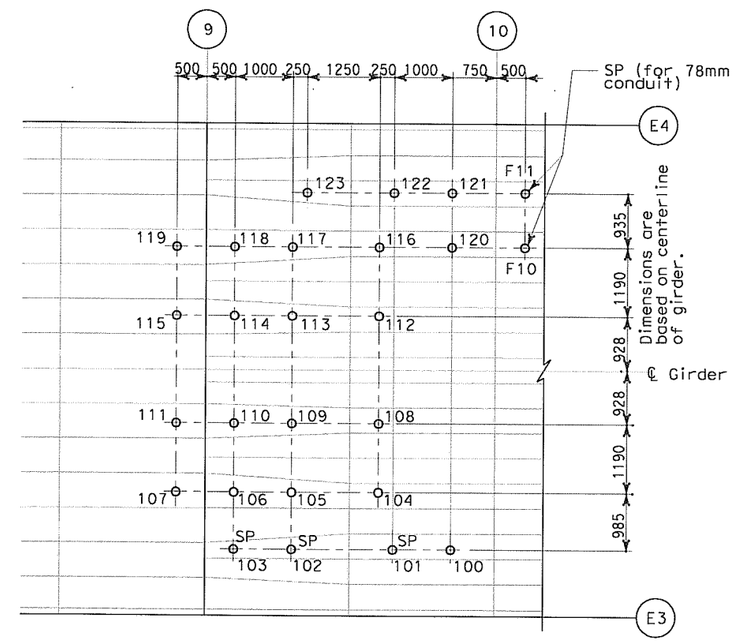

PIPE SLEEVE LOCATION-PLAN (6)

SCALE 1:100

SHEET NOTES:

1. To prevent moisture from entering girder. contractor to seal the space between sleeves and conduits.
2. Down to cable tray, for continuation see sheet E-212.
3. Provide drop out tray fitting.
4. Provide insulated ground bushing at end of conduit.
5. 15 KV splice box is bolted to longitudinal shear plate and installed by field.
6. See table A, sheet E-212B.

NOTES:

1. References:
   - For circuit and conduit/cable tray schedules, see sheets starting at E-401.
2. (SP) Denotes spare pipe sleeve for future 103 mm conduit. Contractor to provide threaded cap at exterior end (Unless Otherwise Noted).
3. For cable tray supports details, see AS sheets.
4. Cable tray fittings shall be 610 radius.

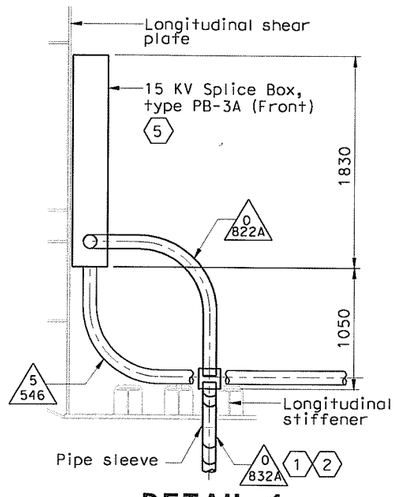

DETAIL 1

SCALE 1:50

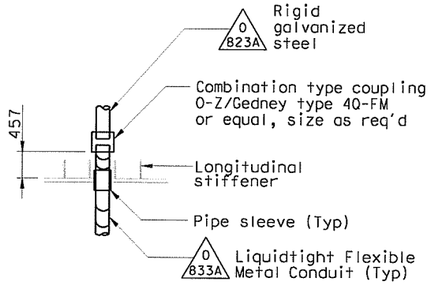

DETAIL 2

SCALE 1:50

REQUEST FOR INFORMATION NOT ADDRESSED IN THIS CCO REMAIN IN FORCE					
0	02/25/08	CABLE TRAY CHANGES	TW MP	RG SE	42S1
MARK	DATE	DESCRIPTIONS	BY	CH'D	CCO#
REVISIONS					

CONTRACT CHANGE ORDER NO. _____
SHEET _____ OF _____

DETAILS
SAS SUPERSTRUCTURE GIRDER EASTBOUND CABLE TRAY AND CONDUIT AT PIER W2E

SCALE AS NOTED

E-212A

DATE	REVISED BY	DATE REVISED
CALCULATED/ DESIGNED BY	CHECKED BY	
DESIGN OVERSIGHT	BEHZAD GOLEMOHAMMADI	

STATE OF CALIFORNIA - DEPARTMENT OF TRANSPORTATION
Caltrans

THIS PLAN ACCURATE FOR ELECTRICAL WORK ONLY.

ALL DIMENSIONS ARE IN MILLIMETERS UNLESS OTHERWISE SHOWN

FOR REDUCED PLANS ORIGINAL SCALE IS IN MILLIMETERS 0 20 40 60 80

DGN FILE => f:\13103\MS\pse\SAS Struc\CCO\SAS CCO42S1\CCO 42S1 Final Submittal 2008-07-11\04-0120f1_0235S01.dgn
USERNAME => llorico

CU 04251 | EA 0120F1

LAST REVISION 00-00-00 | DATE PLOTTED => 7/11/2008 | TIME PLOTTED => 2:59:07 PM

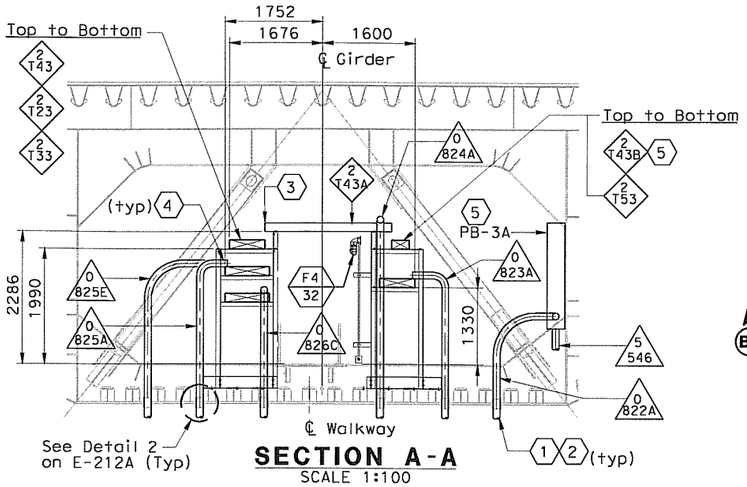

SECTION A-A
SCALE 1:100

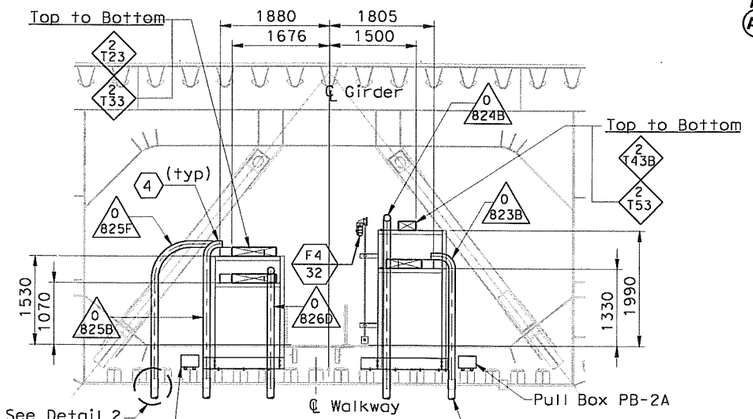

SECTION B-B
SCALE 1:100

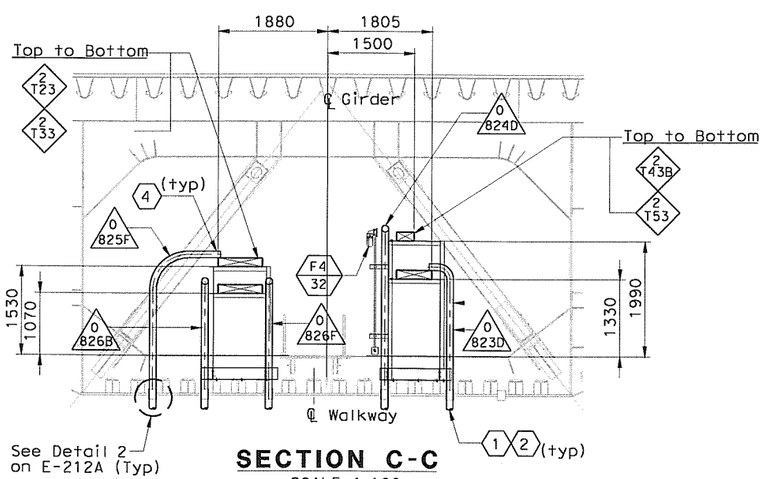

SECTION C-C
SCALE 1:100

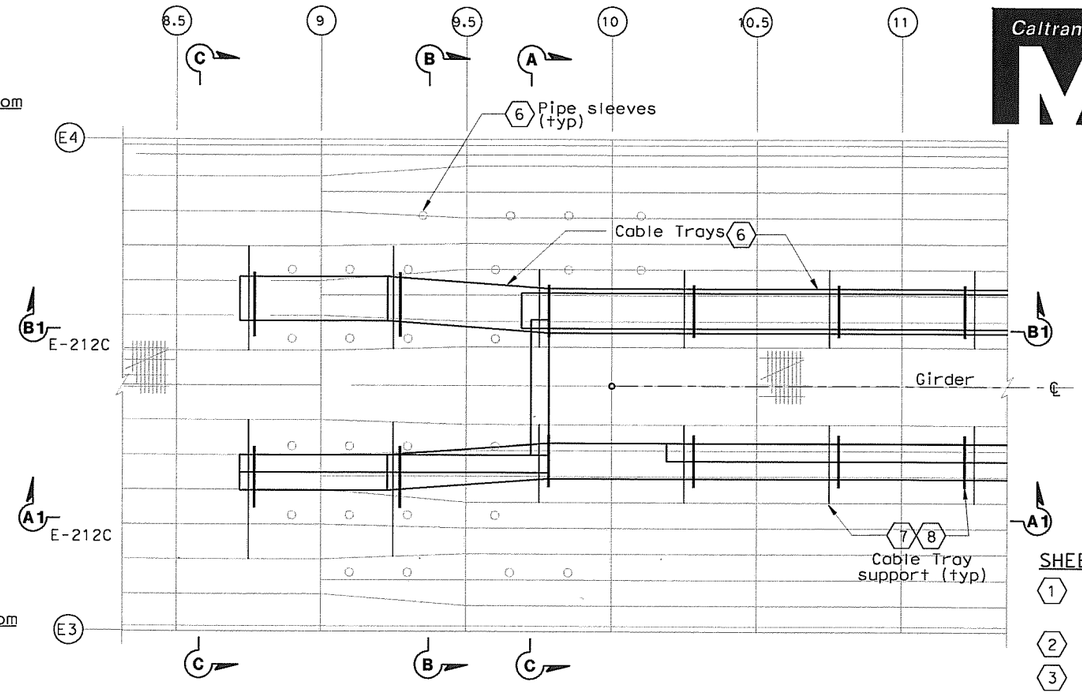

CABLE TRAY SUPPORT LOCATION-PLAN
SCALE 1:100

TABLE A (6)

Tray Number (Below Structure)	Conduit number Pipe Sleeve no. (Inside Girder)	Tray Number (Inside Girder)
2 T14 15 KV	0 822A, SP, SP, SP 100 101 102 103	To PB-3A Pull Box
2 T54 Non-Caltrans Uitilities	0 823A, 0 823B, 0 823C, 0 823D 104 105 106 107	2 T53 Non-Caltrans Uitilities
2 T49 TOS/COM	0 824A, 0 824B, 0 824C, 0 824D 108 109 110 111	2 T43A, 2 T43B TOS/COM
2 T29 600 V	0 825A, 0 825B, 0 825C, 0 825D, 0 825E, 0 825F 116 117 120 121 122 123	2 T23 600 V
2 T39 600 V	0 826A, 0 826B, 0 826C, 0 826D, 0 826E, 0 826F 118 119 112 113 114 115	2 T33 600 V
	-, - F10 F11	

SHEET NOTES:

(1) To prevent moisture from entering girder, Contractor to seal the space between sleeves and conduits.

(2) Down to pull box, for details see sheet E-212.

(3) Provide drop out cable tray.

(4) Provide insulated ground bushing at end of conduit.

(5) 15 KV splice box is bolted to longitudinal shear plate and installed by field.

(6) For cable trays inside girder, pipe sleeves, see sheet E-212A. The cable cable trays below W2 cap beam, see sheet E-212.

(7) The Contractor to provide cable tray hold down clamps.

(8) For cable tray support see AS-16K.

NOTES:

1. References:
   - For circuit and conduit/cable tray schedules, see sheets starting at E-401.
2. (SP) Denotes spare pipe sleeve for 103 mm conduit. Contractor to provide threaded cap at exterior end (Unless Otherwise Noted).
3. For cable tray support details, see AS sheets.
4. Cable tray fittings shall be 610 radius.

REQUEST FOR INFORMATION NOT ADDRESSED IN THIS CCO REMAIN IN FORCE

MARK	DATE	DESCRIPTIONS	BY	CH'D	CCO#
0	02/25/08	CABLE TRAY CHANGES	TW MP	RG SE	42S1

REVISIONS

CONTRACT CHANGE ORDER NO. _____
SHEET _____ OF _____

DETAILS
SAS SUPERSTRUCTURE GIRDER EASTBOUND CABLE TRAY AND CONDUIT AT PIER W2E
SCALE AS NOTED

E-212B

DIST	COUNTY	ROUTE	KILOMETER POST TOTAL PROJECT	SHEET No	TOTAL SHEETS
04	SF	80	13.2/13.9	235 S2	1204

REGISTERED ELECTRICAL ENGINEER 2/22/08 DATE

REGISTERED PROFESSIONAL ENGINEER S. A. ESTOQUE, JR. No. E-10151 Exp. 12/31/2008 ELECTRICAL STATE OF CALIFORNIA

PLANS APPROVAL DATE

PB AMERICAS, Inc.
A Parsons Brinckerhoff Company
303 Second St., Suite 700N
San Francisco, CA 94107-1317

The State of California or its officers or agents shall not be responsible for the accuracy or completeness of electronic copies of this plan sheet.

Caltrans now has a web site! To get to the web site, go to http://www.dot.ca.gov

Caltrans Metric

DESIGN OVERSIGHT BEHZAD GOLEMOHAMMADI

CALCULATED/DESIGNED BY | CHECKED BY | DATE | REVISED BY | DATE REVISED

STATE OF CALIFORNIA - DEPARTMENT OF TRANSPORTATION
Caltrans

THIS PLAN ACCURATE FOR ELECTRICAL WORK ONLY.

ALL DIMENSIONS ARE IN MILLIMETERS UNLESS OTHERWISE SHOWN

FOR REDUCED PLANS ORIGINAL SCALE IS IN MILLIMETERS 0 20 40 60 80

DGN FILE =>T:\13103\MS\pse\SAS Struc\CCO\SAS CCO42S1\CCO 42S1 Final Submittal 2008-07-11\04-0120f1_0235S02.dgn
USERNAME =>llorico

CU 04251 | EA 0120F1

LAST REVISION 00-00-00 | DATE PLOTTED => 7/11/2008 TIME PLOTTED => 2:59:30 PM

DIST	COUNTY	ROUTE	KILOMETER POST TOTAL PROJECT	SHEET No.	TOTAL SHEETS
04	SF	80	13.2/13.9	235 S3	1204

REGISTERED ELECTRICAL ENGINEER — DATE 2/22/08

REGISTERED PROFESSIONAL ENGINEER S. A. ESTOOLE, JR. No. E-10151 Exp. 12/31/2008 ELECTRICAL STATE OF CALIFORNIA

PLANS APPROVAL DATE

PB AMERICAS, Inc.
A Parsons Brinckerhoff Company
303 Second St., Suite 700N
San Francisco, CA 94107-1317

The State of California or its officers or agents shall not be responsible for the accuracy or completeness of electronic copies of this plan sheet.

Caltrans now has a web site! To get to the web site, go to http://www.dot.ca.gov

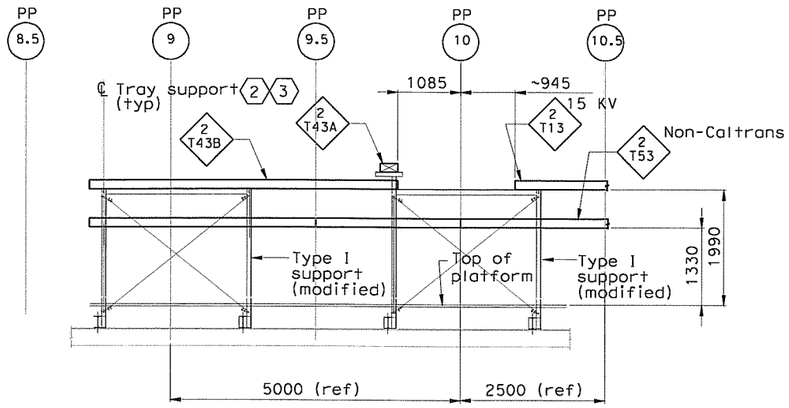

ELEVATION A1-A1

SOUTH OF EB LINE PP 8.5 TO PP 10.5
SCALE: 1:10

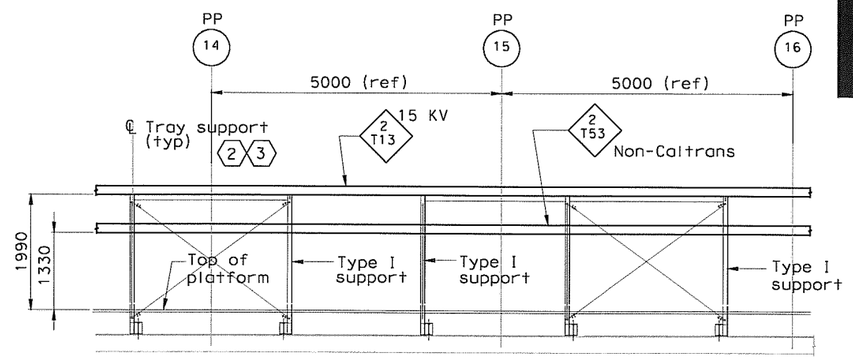

ELEVATION A2-A2

SHOWN STARTING AT PP-14
(TYPICAL CABLE TRAY SUPPORT)
SCALE: 1:10

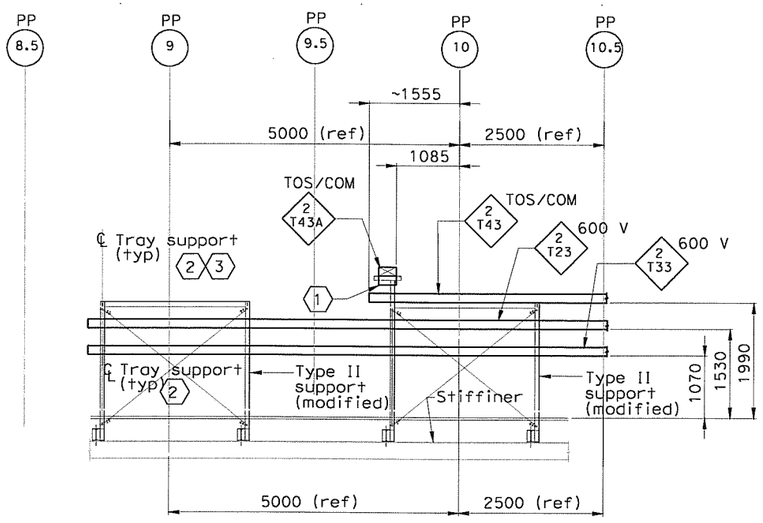

ELEVATION B1-B1

NORTH OF EB LINE PP 8.5 TO PP 10.5
SCALE: 1:10

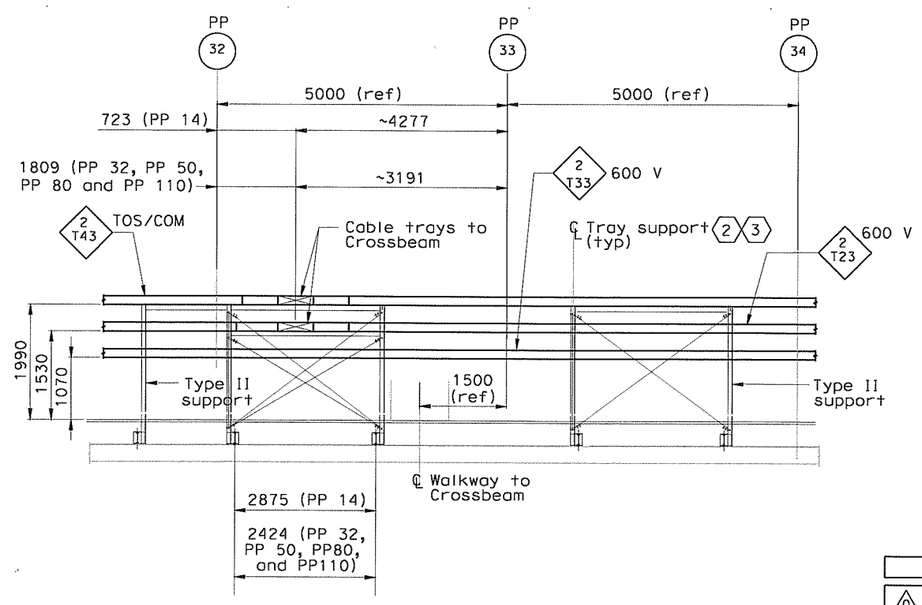

ELEVATION B2-B2

TYPICAL CABLE TRAY SUPPORT
(SIMILAR TO PP 14 EXCEPT AS NOTED)
SCALE: 1:10

SHEET NOTES:

1. Provide drop out tray fitting.
2. The Contractor shall provide cable tray clamps at each location of tray support.
3. For cable tray support see AS-Sheets.

NOTES:

1. References:
   - For circuit and conduit/cable tray schedules, see sheets starting at E-401.
2. Conduits to cable trays not shown for clarity, see plan drawings.
3. For cable tray supports details, see AS sheets.
4. Cable trays fittings shall be 610 radius.

REQUEST FOR INFORMATION NOT ADDRESSED IN THIS CCO REMAIN IN FORCE

MARK	DATE	DESCRIPTIONS	BY	CH'D	CCO#
0	02/25/08	CABLE TRAY CHANGES	TW	RG SE	42S1

REVISIONS

CONTRACT CHANGE ORDER NO. _____
SHEET _____ OF _____

DETAILS
SAS SUPERSTRUCTURE GIRDER EASTBOUND CABLE TRAY AND CONDUIT AT PIER W2W

SCALE AS NOTED

E-212C

THIS PLAN ACCURATE FOR ELECTRICAL WORK ONLY.

ALL DIMENSIONS ARE IN MILLIMETERS UNLESS OTHERWISE SHOWN

FOR REDUCED PLANS ORIGINAL SCALE IS IN MILLIMETERS 0 20 40 60 80

DGN FILE =>T:\13103\MS\pse\SAS Struc\CCO\SAS CC042S1\CCO 42S1 Final Submittal 2008-07-11\04-0120f1_0235S03.dgn
USERNAME =>llorico

CU 04251 | EA 0120F1

LAST REVISION 00-00-00 | DATE PLOTTED => 7/11/2008 TIME PLOTTED => 2:59:50 PM

STATE OF CALIFORNIA - DEPARTMENT OF TRANSPORTATION
Caltrans

DESIGN OVERSIGHT: BEHZAD GOLEMOHAMMADI

CALCULATED/DESIGNED BY | CHECKED BY | REVISED BY | DATE REVISED | DATE

DIST	COUNTY	ROUTE	KILOMETER POST TOTAL PROJECT	SHEET No.	TOTAL SHEETS
04	SF	80	13.2/13.9	236 R1	1204

Jens Erlingsson 12/19/02
REGISTERED ELECTRICAL ENGINEER DATE

12-6-04
PLANS APPROVAL DATE

REGISTERED PROFESSIONAL ENGINEER JENS ERLINGSSON No. 8249 Exp. 9/30/06 ELECTRICAL STATE OF CALIFORNIA

PB POWER, Inc.
A Parsons Brinckerhoff Company
303 Second St., Suite 700N
San Francisco, CA 94107-1317

The State of California or its officers or agents shall not be responsible for the accuracy or completeness of electronic copies of this plan sheet.

Caltrans now has a web site! To get to the web site, go to http://www.dot.ca.gov

Caltrans Metric

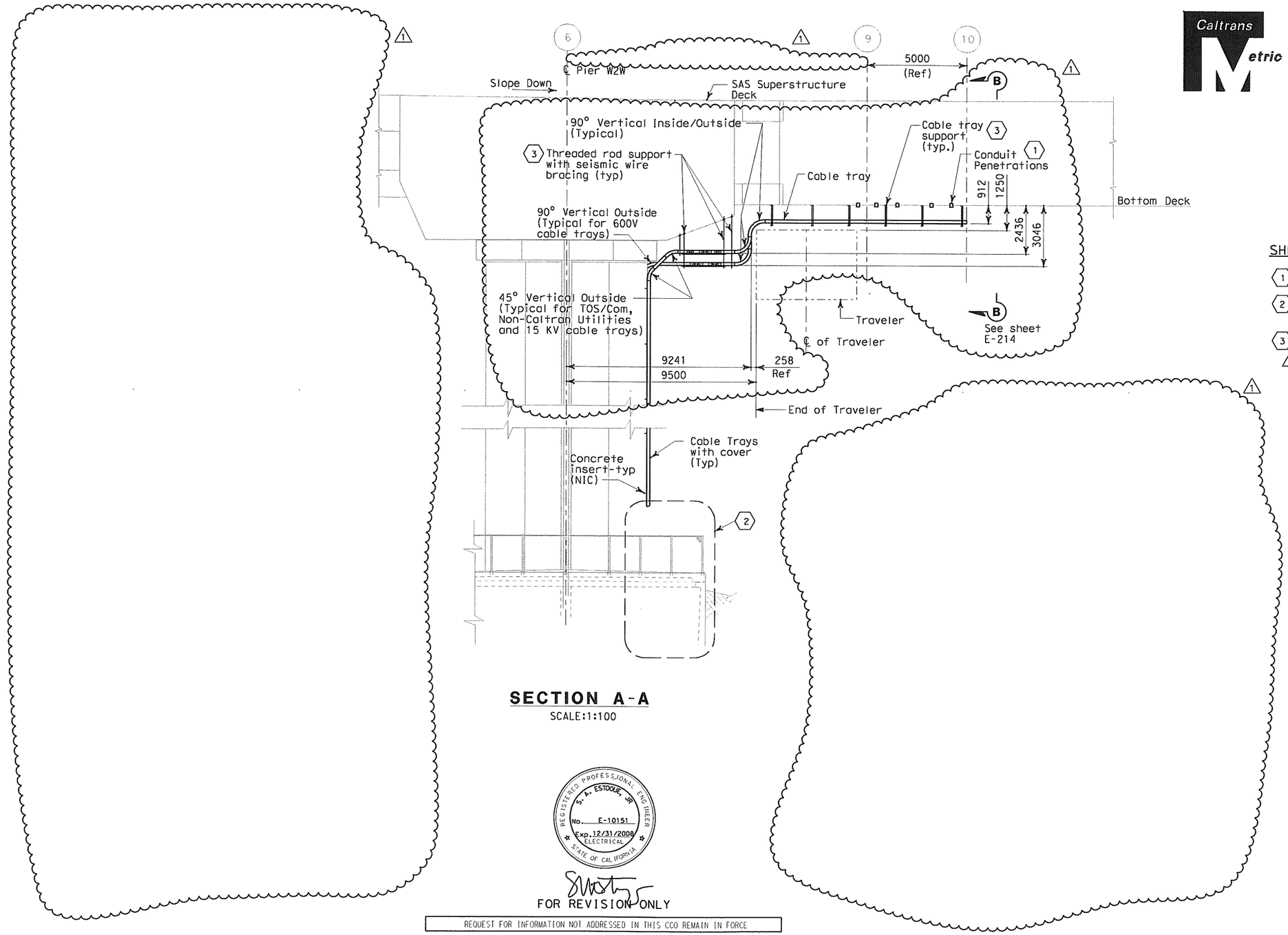

SECTION A-A

SCALE:1:100

SHEET NOTES:

1. See sheet E-212 for location.
2. For Pier W2E details, see sheet E-21, E-21E and E-21F.
3. For cable tray support type and location, see sheet E-212.

REGISTERED PROFESSIONAL ENGINEER S. A. ESTOOLE, JR. No. E-10151 Exp. 12/31/2008 ELECTRICAL STATE OF CALIFORNIA

FOR REVISION ONLY

REQUEST FOR INFORMATION NOT ADDRESSED IN THIS CCO REMAIN IN FORCE

MARK	DATE	DESCRIPTIONS	BY	CH'D	CCO#
1	02/25/08	CABLE TRAY CHANGES	RG	SE	4251

REVISIONS

CONTRACT CHANGE ORDER NO. _____
SHEET _____ OF _____

DETAILS
SAS SUPERSTRUCTURE GIRDER EASTBOUND PIER W2E SECTION AND PLANS

SCALE AS NOTED

E-213

THIS PLAN IS ACCURATE FOR ELECTRICAL WORK ONLY.

ALL DIMENSIONS ARE IN MILLIMETERS UNLESS OTHERWISE SHOWN.

FOR REDUCED PLANS ORIGINAL SCALE IS IN MILLIMETERS 0 20 40 60 80

DGN FILE =>T:\13103\MS\pse\SAS Struc\CCO\SAS CCO4251\CCO 4251 Final Submittal 2008-07-11\04-0120F1_0236R01.dgn
USERNAME =>llorico

CU 04251 | EA 0120F1

LAST REVISION 00-00-00 | DATE PLOTTED => 7/11/2008 TIME PLOTTED => 3:00:22 PM

STATE OF CALIFORNIA - DEPARTMENT OF TRANSPORTATION
Caltrans

DESIGN OVERSIGHT
BEHZAD GOLEMOHAMMADI

CALCULATED/DESIGNED BY EDC DATE 08/02 REVISED BY IAH
CHECKED BY CYF 08/02 DATE REVISED 3/04

DIST	COUNTY	ROUTE	KILOMETER POST TOTAL PROJECT	SHEET No.	TOTAL SHEETS
04	SF	80	13.2/13.9	237 R1	1204

Jens Erlingsson 12/19/02
REGISTERED ELECTRICAL ENGINEER DATE

12-6-04
PLANS APPROVAL DATE

REGISTERED PROFESSIONAL ENGINEER JENS ERLINGSSON No. 8249 Exp. 9/30/06 ELECTRICAL STATE OF CALIFORNIA

PB POWER, Inc.
A Parsons Brinckerhoff Company
303 Second St., Suite 700N
San Francisco, CA 94107-1317

The State of California or its officers or agents shall not be responsible for the accuracy or completeness of electronic copies of this plan sheet.

Caltrans now has a web site! To get to the web site, go to http://www.dot.ca.gov

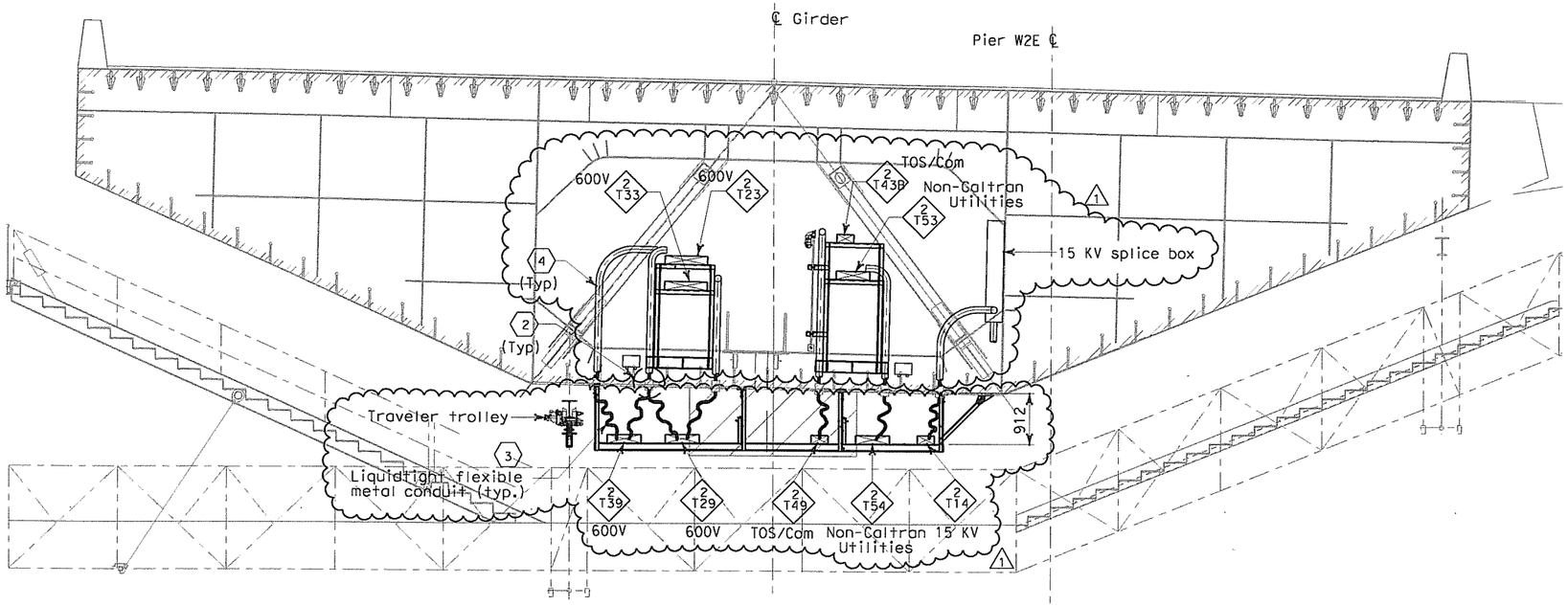

SECTION D-D
SCALE 1:50

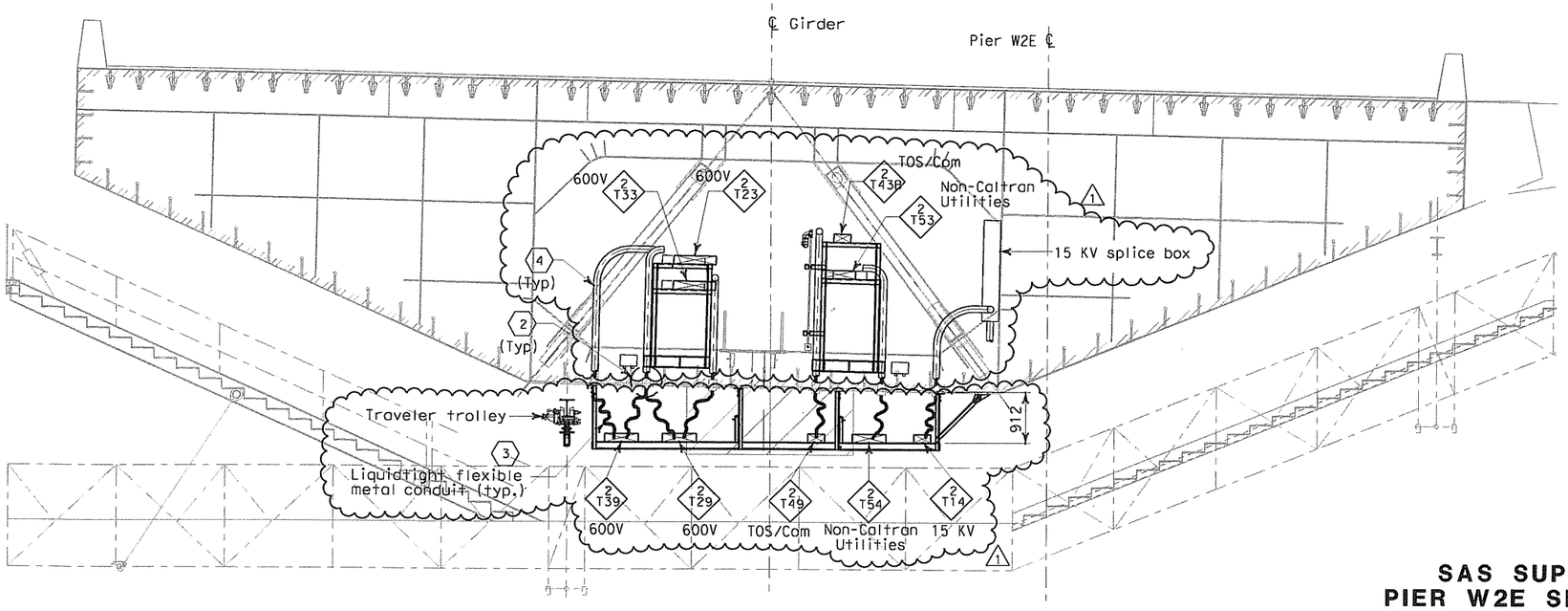

SECTION C-C
SCALE 1:50

SHEET NOTES:

1. For typical below bridge girder cable supports, see AS-sheets.
2. For location of conduit penetrations thru girder plate, see Utility Detail No. 1 and Utility Layout sheets respectively. To prevent moisture from passing inside the sleeve, Contractor shall install sealant after conduit have been installed. Spares shall be plugged and capped.
3. For installation detail of flexible metallic conduits below girder, see sheet E-212.
4. For installation detail of conduits inside girder, see sheet E-212B.

NOTES:

1. References:
   - For typical tray and conduit installation plan at Pier W2W, see sheet E-212.
   - For typical tray and grounding installation details, see sheet E-208.
   - For typical tray and conduit installation details, see sheet E-207.
   - For stanchion mounted light installation detail, see sheet E-206.
   - For girder cable tray supports, see AS-sheets.

REGISTERED PROFESSIONAL ENGINEER S. A. ESTOOLE, JR. No. E-10151 Exp. 12/31/2008 ELECTRICAL STATE OF CALIFORNIA

FOR REVISION ONLY

REQUEST FOR INFORMATION NOT ADDRESSED IN THIS CCO REMAIN IN FORCE

MARK	DATE	DESCRIPTIONS	BY	CH'D	CCO#
1	02/25/08	CABLE TRAY CHANGES	RG	SE	42S1

REVISIONS

CONTRACT CHANGE ORDER NO. _____
SHEET _____ OF _____

DETAILS
SAS SUPERSTRUCTURE GIRDER EASTBOUND PIER W2E SECTIONS AND TYPICAL PENETRATIONS
SCALE AS NOTED

E-214

CALCULATED/ DESIGNED BY	EDC	DATE 08/02	REVISED BY	IAH
CHECKED BY	CYF	08/02	DATE REVISED	3/04

DESIGN OVERSIGHT
BEHZAD GOLEMOHAMMADI

STATE OF CALIFORNIA - DEPARTMENT OF TRANSPORTATION
Caltrans

THIS PLAN ACCURATE FOR ELECTRICAL WORK ONLY.

ALL DIMENSIONS ARE IN MILLIMETERS UNLESS OTHERWISE SHOWN

FOR REDUCED PLANS ORIGINAL SCALE IS IN MILLIMETERS 0 20 40 60 80

DGN FILE =>T:\13103\MS\pse\SAS Struc\CCO\SAS CCO42S1\CCO 42S1 Final Submittal 2008-07-11\04-0120f1_0237R01.dgn
USERNAME =>llorico

CU 04251 | EA 0120F1

LAST REVISION 00-00-00 | DATE PLOTTED => 7/11/2008 TIME PLOTTED => 3:00:40 PM

DIST	COUNTY	ROUTE	KILOMETER POST TOTAL PROJECT	SHEET No	TOTAL SHEETS
04	SF	80	13.2/13.9	237 S1	1204

REGISTERED ELECTRICAL ENGINEER — DATE 2/22/08

REGISTERED PROFESSIONAL ENGINEER S. A. ESTOQUE, JR. No. E-10151 Exp. 12/31/2008 ELECTRICAL STATE OF CALIFORNIA

PLANS APPROVAL DATE

PB AMERICAS, Inc.
A Parsons Brinckerhoff Company
303 Second St., Suite 700N
San Francisco, CA 94107-1317

The State of California or its officers or agents shall not be responsible for the accuracy or completeness of electronic copies of this plan sheet.

Caltrans now has a web site! To get to the web site, go to http://www.dot.ca.gov

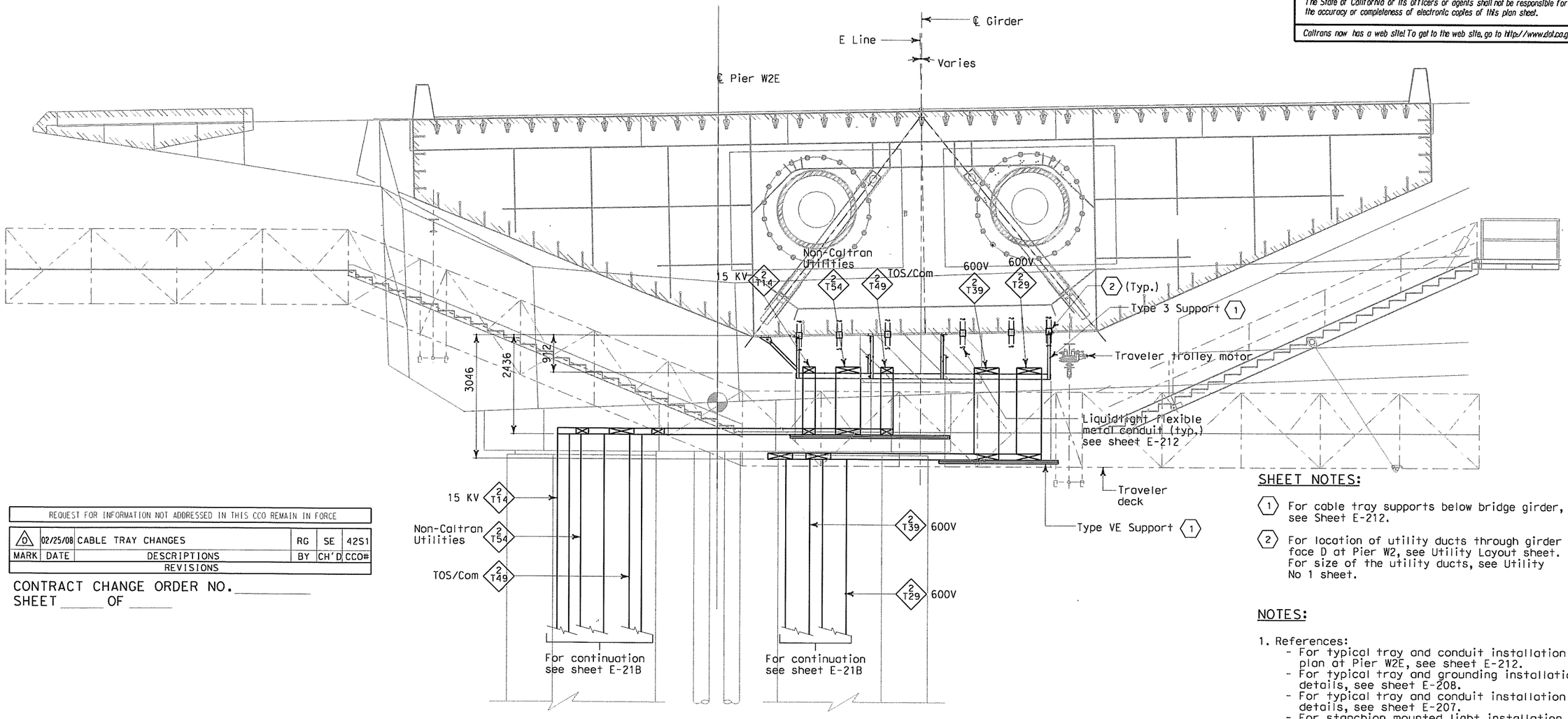

SECTION B-B

SCALE 1:50

REQUEST FOR INFORMATION NOT ADDRESSED IN THIS CCO REMAIN IN FORCE					
0	02/25/08	CABLE TRAY CHANGES	RG	SE	42S1
MARK	DATE	DESCRIPTIONS	BY	CH'D	CCO#
		REVISIONS			

CONTRACT CHANGE ORDER NO. _____
SHEET _____ OF _____

SHEET NOTES:

(1) For cable tray supports below bridge girder, see Sheet E-212.

(2) For location of utility ducts through girder face D at Pier W2, see Utility Layout sheet. For size of the utility ducts, see Utility No 1 sheet.

NOTES:

1. References:
   - For typical tray and conduit installation plan at Pier W2E, see sheet E-212.
   - For typical tray and grounding installation details, see sheet E-208.
   - For typical tray and conduit installation details, see sheet E-207.
   - For stanchion mounted light installation detail, see sheet E-206.
   - For girder cable tray supports, see AS - sheets.

DETAILS
SAS SUPERSTRUCTURE GIRDER EASTBOUND PIER W2E SECTIONS AND TYPICAL PENETRATIONS

SCALE AS NOTED

E-214A

CALCULATED/ DESIGNED BY	RG	DATE	REVISED BY
CHECKED BY	SE		DATE REVISED

DESIGN OVERSIGHT
BEHZAD GOLEMOHAMMADI

STATE OF CALIFORNIA - DEPARTMENT OF TRANSPORTATION
Caltrans

THIS PLAN ACCURATE FOR ELECTRICAL WORK ONLY.

ALL DIMENSIONS ARE IN MILLIMETERS UNLESS OTHERWISE SHOWN

FOR REDUCED PLANS ORIGINAL SCALE IS IN MILLIMETERS 0 20 40 60 80

DGN FILE => T:\13103\MS\pse\SAS Struc\CCO\SAS CCO42S1\CCO 42S1 Final Submittal 2008-07-11\04-0120F1_0237S01.dgn
USERNAME => llorico

CU 04251 | EA 0120F1

LAST REVISION 00-00-00 | DATE PLOTTED => 7/11/2008 | TIME PLOTTED => 3:01:03 PM

DIST	COUNTY	ROUTE	KILOMETER POST TOTAL PROJECT	SHEET NO.	TOTAL SHEETS
04	SF	80	13.2/13.9	239 R1	1204

REGISTERED ELECTRICAL ENGINEER 12/19/02 DATE

12-6-04
PLANS APPROVAL DATE

REGISTERED PROFESSIONAL ENGINEER JENS ERLINGSSON No. 8249 Exp. 9/30/06 ELECTRICAL STATE OF CALIFORNIA

PB POWER, Inc.
A Parsons Brinckerhoff Company
303 Second St., Suite 700N
San Francisco, CA 94107-1317

The State of California or its officers or agents shall not be responsible for the accuracy or completeness of electronic copies of this plan sheet.

Caltrans now has a web site! To get to the web site, go to http://www.dot.ca.gov

Caltrans Metric

NOTE:

1. References:
   - For SAS Superstructure Girder Eastbound plan, see sheet E-186.
   - For SAS Superstructure Girder Eastbound typical section, see sheet E-207.

SHEET NOTES:

(1) For utility opening detail, see structural sheets.

(2) For Type I cable tray support structure, see AS-sheets.

(3) For Type VIII cable tray support structure, see AS-sheets.

(4) For Type IX cable tray support structure, see AS-sheets.

(5) For Type II Cable Tray Support Structure, see AS-sheets. (Omit bottom rung).

(6) For Type X Cable Tray Support Structure, see AS-sheets.

(7) Deleted.

(8) Deleted.

(9) Type VIII support with the exception of angle steel bracket oriented as shown on Detail 1. For Details, see AS-sheets.

(10) For Type XI cable tray support structure, see AS-sheets.

(11) For cable tray support see drawing AS-160.

(12) Install grommet of neoprene rubber or similar materials to protect cable insulation from sharp metallic edges.

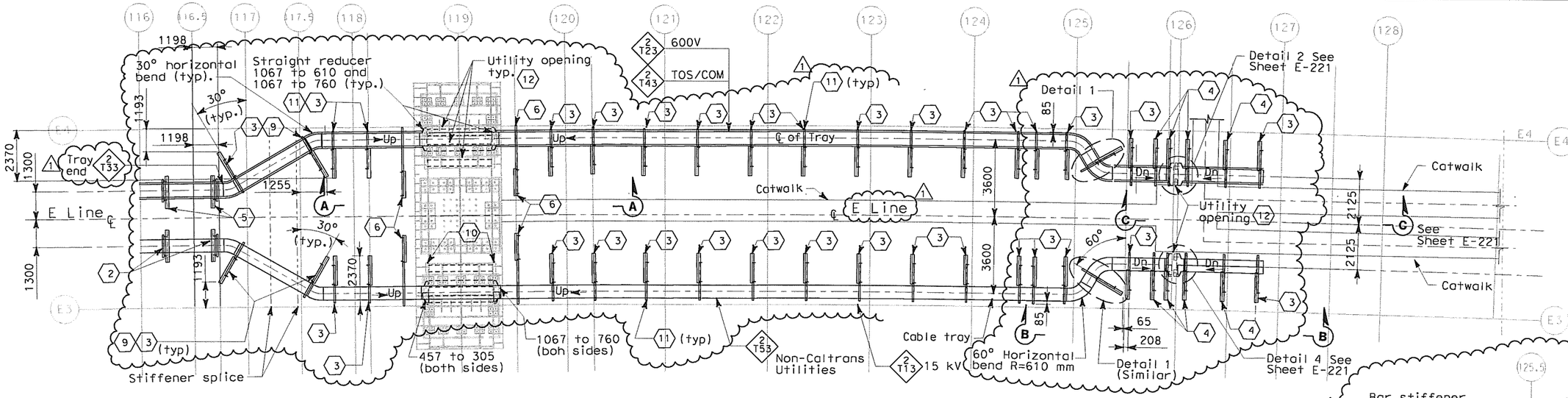

PARTIAL PLAN
SCALE 1:100

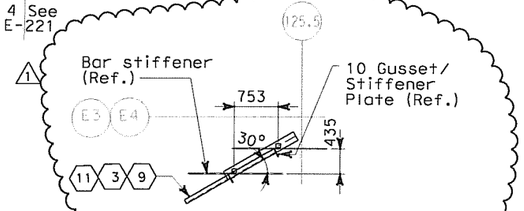

DETAIL 1
SCALE 1:100

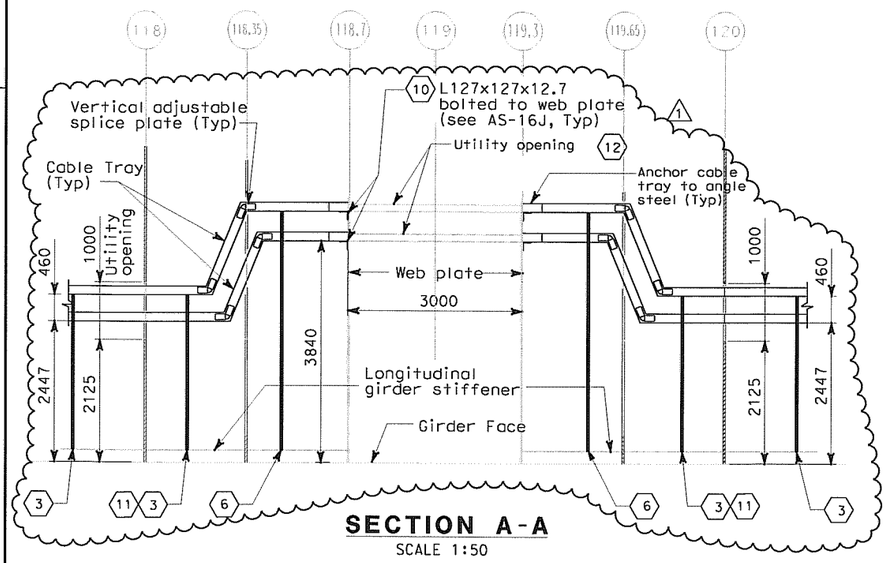

SECTION A-A
SCALE 1:50

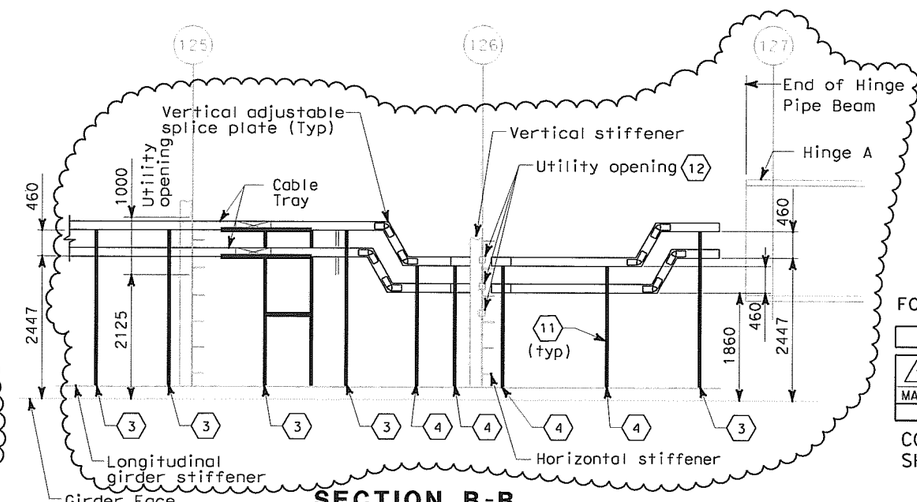

SECTION B-B
SCALE 1:50

REGISTERED PROFESSIONAL ENGINEER S. A. ESTOQUE, JR. No. E-10151 Exp. 12/31/2008 ELECTRICAL STATE OF CALIFORNIA

FOR REVISION ONLY

REQUEST FOR INFORMATION NOT ADDRESSED IN THIS CCO REMAIN IN FORCE

MARK	DATE	DESCRIPTIONS	BY	CH'D	CCO#
1	02/25/08	CABLE TRAY CHANGES	TW	RG SE	42S1

REVISIONS

CONTRACT CHANGE ORDER NO. _____
SHEET ____ OF ____

DETAILS
SAS SUPERSTRUCTURE GIRDER EASTBOUND HINGE AE
SCALE AS NOTED

E-220

DATE	BY	CALCULATED/ DESIGNED BY	CHECKED BY	REVISED BY	DATE REVISED
08/02	EDC	CYF	08/02	IAH	3/04

DESIGN OVERSIGHT
BEHZAD GOLEMOHAMMADI

STATE OF CALIFORNIA - DEPARTMENT OF TRANSPORTATION
Caltrans

THIS PLAN ACCURATE FOR ELECTRICAL WORK ONLY.

ALL DIMENSIONS ARE IN MILLIMETERS UNLESS OTHERWISE SHOWN

FOR REDUCED PLANS ORIGINAL SCALE IS IN MILLIMETERS 0 20 40 60 80

DGN FILE =>T:\13103\MS\pse\SAS Struc\CCO\SAS CCO42S1\CCO 42S1 Final Submittal 2008-07-11\04-0120f1_0239R01.dgn
USERNAME =>llorico

CU 04251 | EA 0120F1

LAST REVISION 00-00-00
DATE PLOTTED => 7/11/2008
TIME PLOTTED => 3:01:19 PM

DIST	COUNTY	ROUTE	KILOMETER POST TOTAL PROJECT	SHEET No.	TOTAL SHEETS
04	SF	80	13.2/13.9	240 R1	1204

Jens Erlingsson 12/19/02
REGISTERED ELECTRICAL ENGINEER DATE

12-6-04
PLANS APPROVAL DATE

REGISTERED PROFESSIONAL ENGINEER JENS ERLINGSSON No. 8249 Exp. 9/30/06 ELECTRICAL STATE OF CALIFORNIA

PB POWER, Inc.
A Parsons Brinckerhoff Company
303 Second St., Suite 700N
San Francisco, CA 94107-1317

The State of California or its officers or agents shall not be responsible for the accuracy or completeness of electronic copies of this plan sheet.

Caltrans now has a web site! To get to the web site, go to http://www.dot.ca.gov

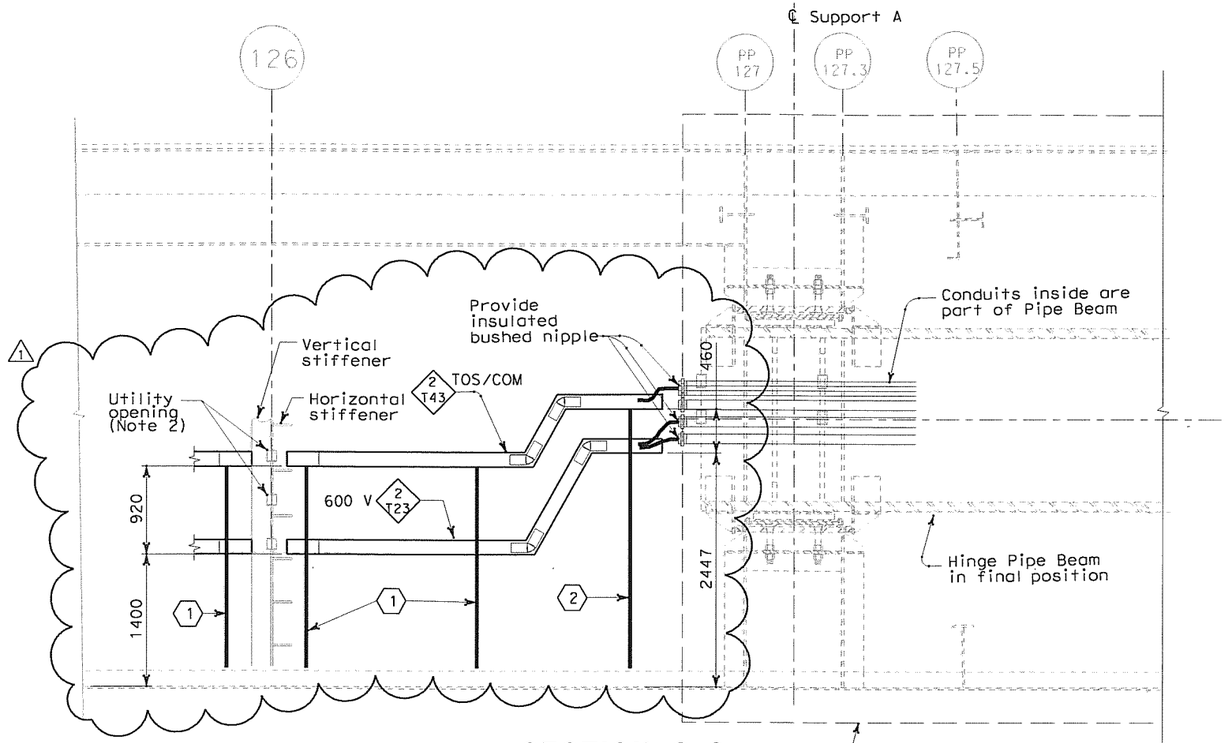

SECTION C-C
(SEE SHEET E-220)
SCALE 1:30

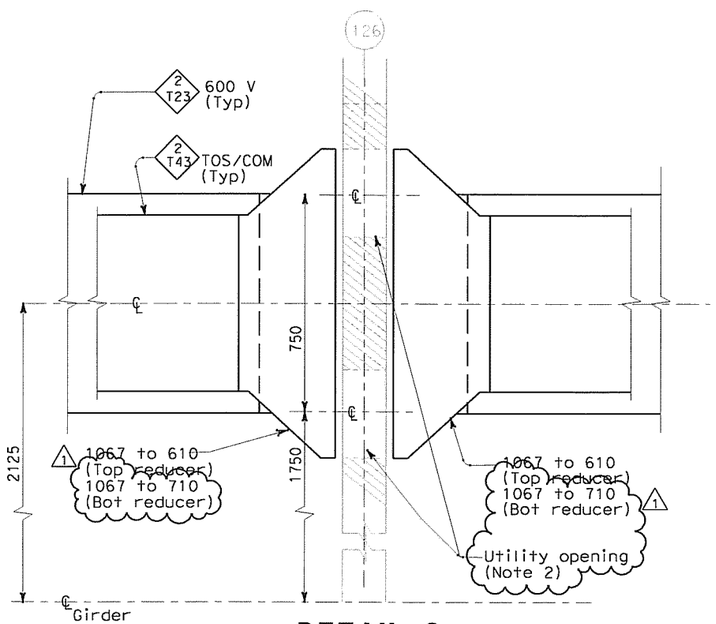

DETAIL 2
(SEE SHEET E-220)
SCALE 1:10

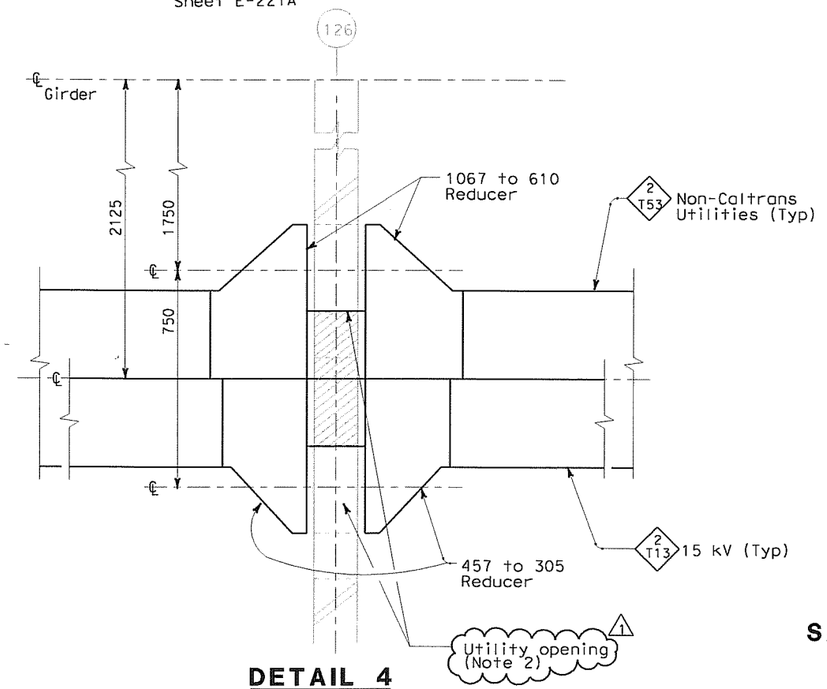

DETAIL 4
(SEE SHEET E-220)
SCALE 1:10

NOTES:

1. For utility opening details at panel point 126, see Structural sheets.
2. Install grommet of neoprene rubber or similar materials to protect cable insulation from sharp metallic edges.

SHEET NOTES:

1. For Type IX cable tray support structure, see AS-15.
2. For Type VIII cable tray support structure, see AS-15.

S. A. ESTOOLE, JR. No. E-10151 Exp. 12/31/2008 ELECTRICAL STATE OF CALIFORNIA

FOR REVISION ONLY

REQUEST FOR INFORMATION NOT ADDRESSED IN THIS CCO REMAIN IN FORCE

MARK	DATE	DESCRIPTIONS	BY	CH'D	CCO#
1	02/25/08	CABLE TRAY CHANGES	MP	RG SE	42S1

REVISIONS

CONTRACT CHANGE ORDER NO. _____
SHEET _____ OF _____

DETAILS
SAS SUPERSTRUCTURE GIRDER EASTBOUND HINGE AE
SCALE AS NOTED

E-221

CALCULATED/DESIGNED BY	EDC	DATE 08/02	REVISED BY IAH
CHECKED BY	CYF	08/02	DATE REVISED 3/04

DESIGN OVERSIGHT
BEHZAD GOLEMOHAMMADI

STATE OF CALIFORNIA - DEPARTMENT OF TRANSPORTATION
Caltrans

THIS PLAN ACCURATE FOR ELECTRICAL WORK ONLY.

ALL DIMENSIONS ARE IN MILLIMETERS UNLESS OTHERWISE SHOWN

FOR REDUCED PLANS ORIGINAL SCALE IS IN MILLIMETERS 0 20 40 60 80

DGN FILE => T:\13103\MS\pse\SAS Struc\CCO\SAS CCO42S1\CCO 42S1 Final Submittal 2008-07-11\04-0120f1_0240R01.dgn
USERNAME => llorico

CU 04251 | EA 0120F1

LAST REVISION 00-00-00
DATE PLOTTED => 7/11/2008
TIME PLOTTED => 3:01:43 PM

DIST	COUNTY	ROUTE	KILOMETER POST TOTAL PROJECT	SHEET No.	TOTAL SHEETS
04	SF	80	13.2/13.9	243 R1	1204

REGISTERED ELECTRICAL ENGINEER 2/6/04 DATE

12-6-04
PLANS APPROVAL DATE

REGISTERED PROFESSIONAL ENGINEER JENS ERLINGSSON No. 8249 Exp. 9/30/06 ELECTRICAL STATE OF CALIFORNIA

PB POWER, Inc.
A Parsons Brinckerhoff Company
303 Second St., Suite 700N
San Francisco, CA 94107-1317

The State of California or its officers or agents shall not be responsible for the accuracy or completeness of electronic copies of this plan sheet.

Caltrans now has a web site! To get to the web site, go to http://www.dot.ca.gov

Caltrans Metric

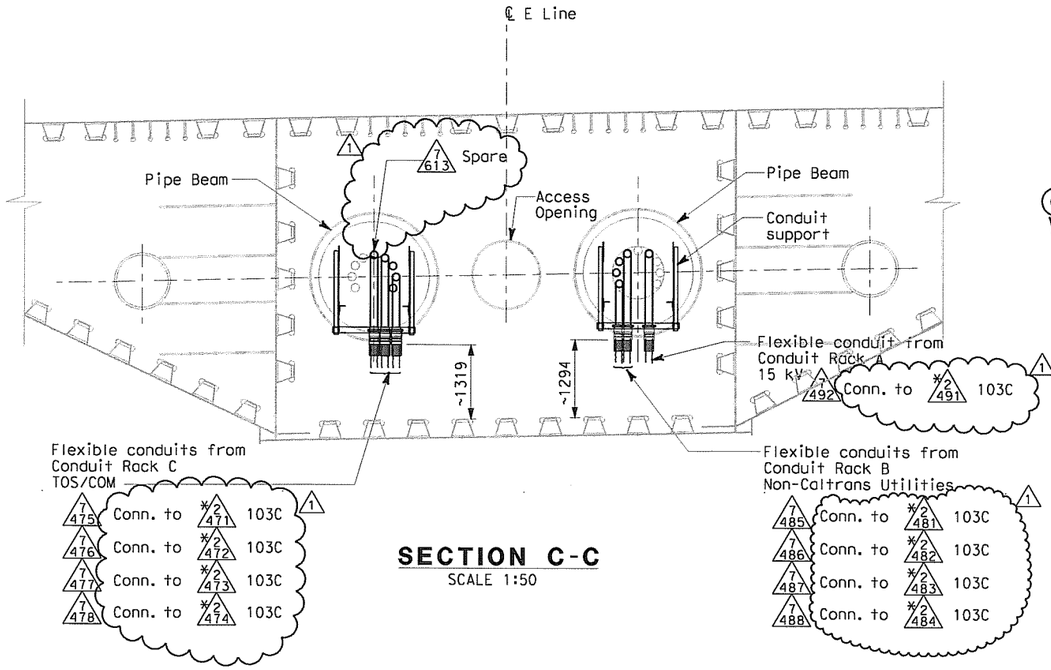

SECTION C-C
SCALE 1:50

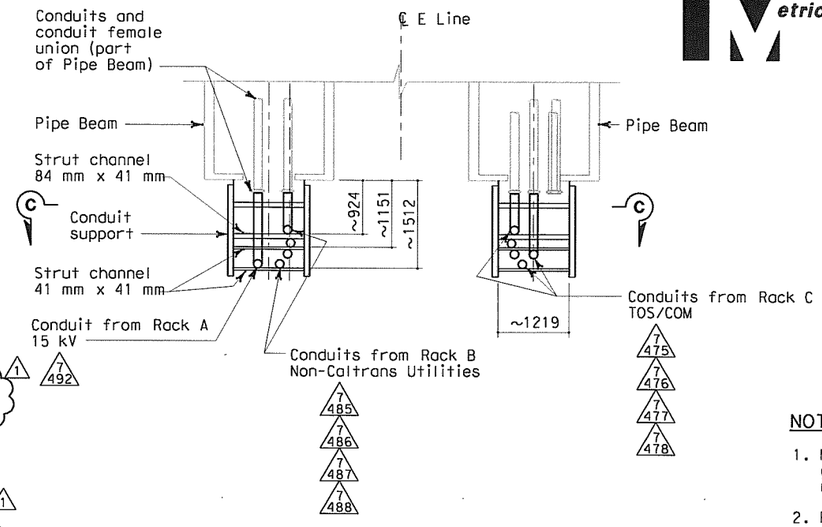

PLAN - DETAIL 1
SCALE 1:50

NOTES:

1. Materials, hardware and fittings shall be galvanized or stainless steel. For additional requirements, see Electrical Special Provisions.
2. References:
   - For Westbound plans and sections, see sheets E-186A and E-221A.
3. Existing conduits (*) inside pipe beam are supplied in Skyway contract.

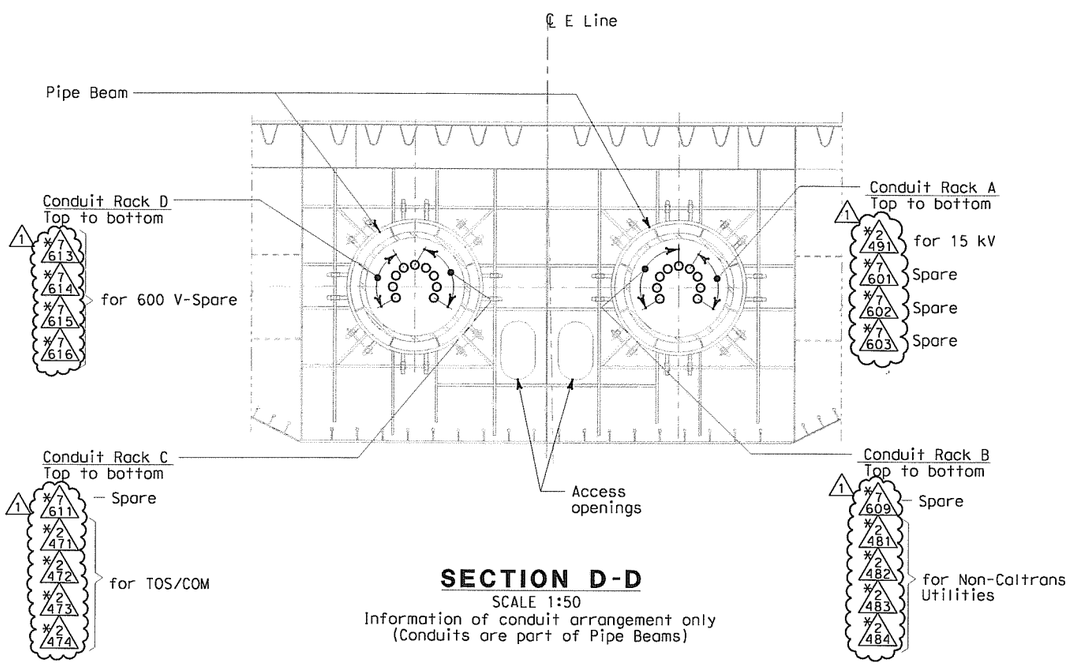

SECTION D-D
SCALE 1:50
Information of conduit arrangement only
(Conduits are part of Pipe Beams)

REGISTERED PROFESSIONAL ENGINEER S. A. ESTODUE, JR. No. E-10151 Exp. 12/31/2008 ELECTRICAL STATE OF CALIFORNIA

FOR REVISION ONLY

REQUEST FOR INFORMATION NOT ADDRESSED IN THIS CCO REMAIN IN FORCE

MARK	DATE	DESCRIPTIONS	BY	CH'D	CCO#
1	02/25/08	CABLE TRAY CHANGES	JD	RG SE	42S1

REVISIONS

CONTRACT CHANGE ORDER NO. _____
SHEET _____ OF _____

DETAILS
SAS SUPERSTRUCTURE AND SKYWAY STRUCTURE GIRDER INTERFACE EASTBOUND HINGE AE SUPPORTS
SCALE AS NOTED

E-221C

DATE	REVISED BY	DATE REVISED
12/03	CYF	EJL 1/04
	EJL	2/04

CALCULATED/DESIGNED BY
CHECKED BY

DESIGN OVERSIGHT
BEHZAD GOLEMOHAMMADI

STATE OF CALIFORNIA - DEPARTMENT OF TRANSPORTATION
Caltrans

THIS PLAN ACCURATE FOR ELECTRICAL WORK ONLY.

ALL DIMENSIONS ARE IN MILLIMETERS UNLESS OTHERWISE SHOWN

FOR REDUCED PLANS ORIGINAL SCALE IS IN MILLIMETERS 0 20 40 60 80

DGN FILE =>T:\13103\MS\pse\SAS Struc\CCO\SAS CCO42S1\CCO 42S1 Final Submittal 2008-07-11\04-0120f1_0243R01.dgn
USERNAME =>llorico

CU 04251 EA 0120F1

LAST REVISION 00-00-00
DATE PLOTTED => 7/11/2008
TIME PLOTTED => 3:02:01 PM

DIST	COUNTY	ROUTE	KILOMETER POST TOTAL PROJECT	SHEET No	TOTAL SHEETS
04	SF	80	13.2/13.9	271 R2	1204

REGISTERED ELECTRICAL ENGINEER 12/19/02 DATE

12-6-04
PLANS APPROVAL DATE

REGISTERED PROFESSIONAL ENGINEER JENS ERLINGSSON No. 8249 Exp. 9/30/06 ELECTRICAL STATE OF CALIFORNIA

PB POWER, Inc.
A Parsons Brinckerhoff Company
303 Second St., Suite 700N
San Francisco, CA 94107-1317

The State of California or its officers or agents shall not be responsible for the accuracy or completeness of electronic copies of this plan sheet.

Caltrans now has a web site! To get to the web site, go to http://www.dot.ca.gov

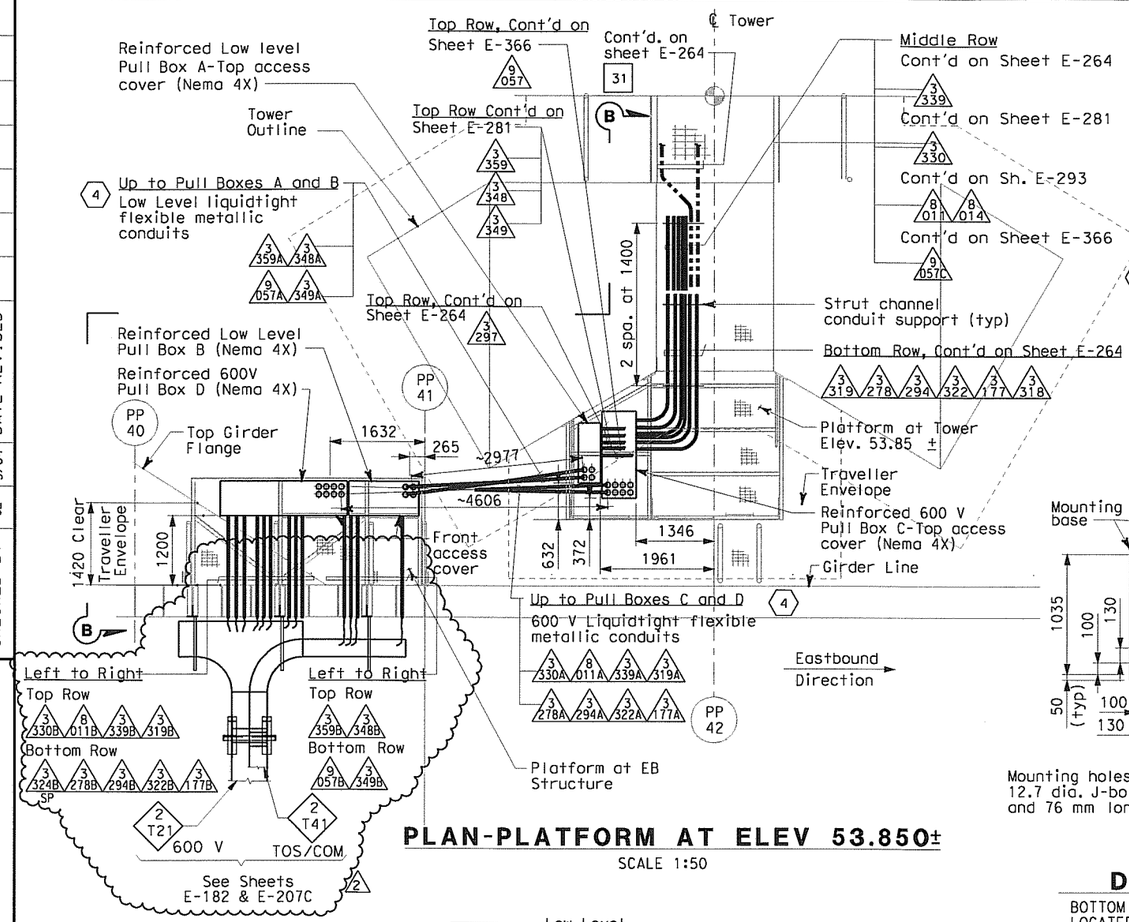

PLAN-PLATFORM AT ELEV 53.850±

SCALE 1:50

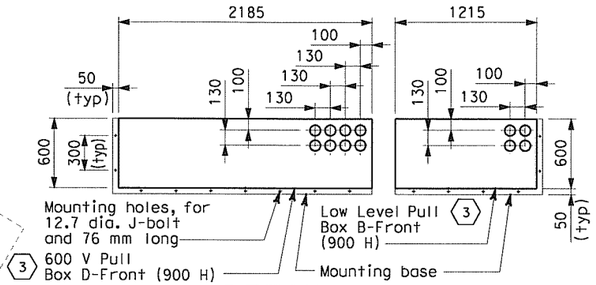

DETAIL 1

BOTTOM PLAN OF PULL BOXES LOCATED AT EB STRUCTURE PLATFORM
SCALE 1:25

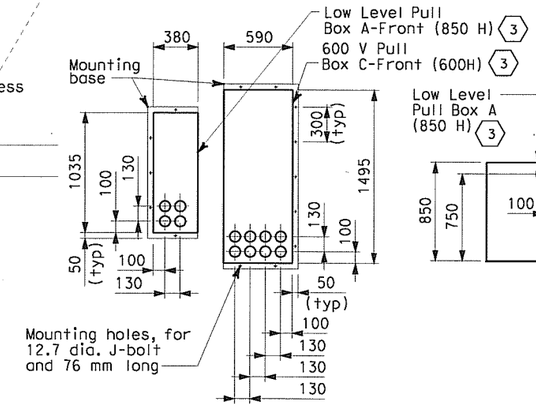

DETAIL 2

BOTTOM PLAN OF PULL BOXES LOCATED AT TOWER PLATFORM
SCALE 1:25

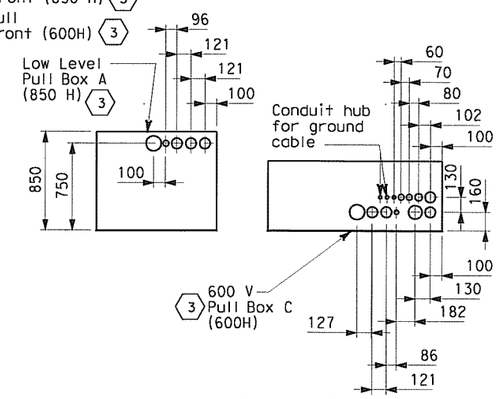

DETAIL 3

FRONT ELEVATION OF PULL BOXES LOCATED AT TOWER PLATFORM
SCALE 1:25

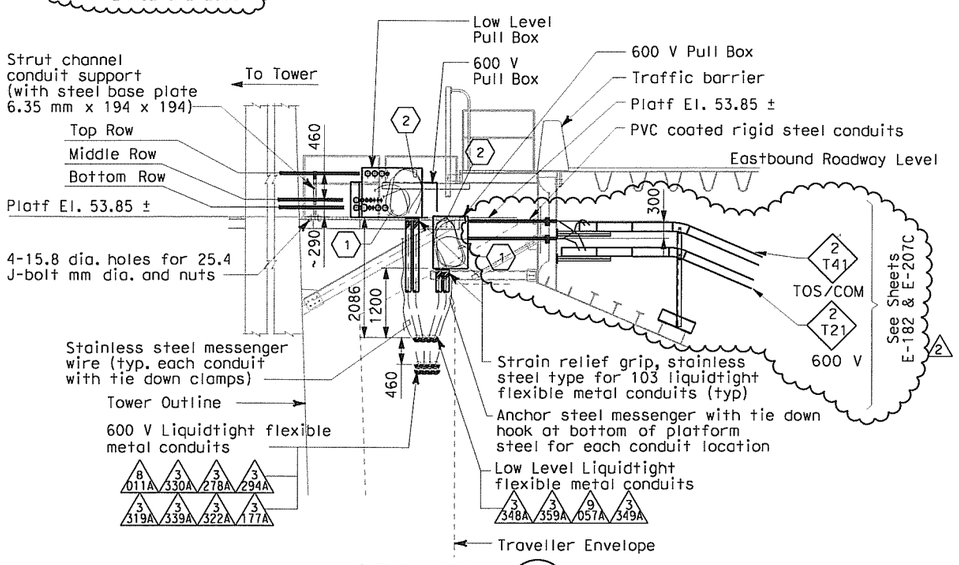

SECTION B

SCALE 1:50

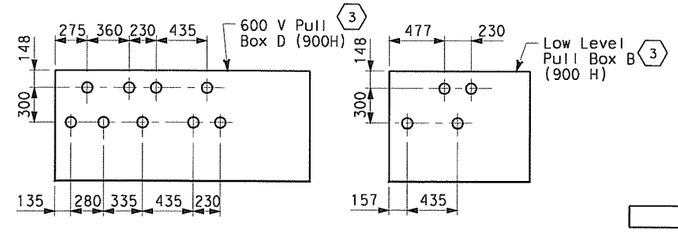

DETAIL 4

FRONT ELEVATION OF PULL BOXES LOCATED AT EB STRUCTURE PLATFORM
SCALE 1:25

SHEET NOTES

1. Coil 3 meters long of cable for each circuits inside the pull boxes.
2. Provide hooked cable support grips for cable or groups of cables at each liquidtight flexible metallic conduit inside the pull box.
3. Pull Box shall be fabricated of Nema 4X stainless steel, type 304. Pull Box shall be of reinforced construction to provide vertical support at bottom side of box for weighted conduit and cables inside. The top side of the Pull Box shall be reinforced and provided with hooks for cable support grips inside the pull box.
4. Electrical conduit design between Eastbound Structure and Main Tower is based on the maximum expansion of 1000 mm all directions.

NOTES

1. For location of sleeves Eastbound Structure PP-40 and PP-41, see Structural Plans.
2. Each liquidtight flexible metallic conduit shall be provided with #6 green insulated ground conductor outside the conduit.

REGISTERED PROFESSIONAL ENGINEER S. A. ESTOQUE, JR. No. E-10151 Exp. 12/31/2008 ELECTRICAL STATE OF CALIFORNIA

FOR REVISION ONLY

REQUEST FOR INFORMATION NOT ADDRESSED IN THIS CCO REMAIN IN FORCE

MARK	DATE	DESCRIPTIONS	BY	CH'D	CCO#
2	02/25/08	CABLE TRAY CHANGES	MP	RG SE	42S1
1	02/19/08	ELECTRICAL MODIFICATIONS	MP EL	RR	42

REVISIONS

CONTRACT CHANGE ORDER NO. _____
SHEET _____ OF _____

DETAILS
TOWER AND SUSPENSION CABLE

SCALE: AS NOTED

E-264A

THIS PLAN ACCURATE FOR ELECTRICAL WORK ONLY.

ALL DIMENSIONS ARE IN MILLIMETERS UNLESS OTHERWISE SHOWN.

DATE	BY	CALCULATED/ DESIGNED BY	CHECKED BY	REVISED BY	DATE REVISED
3/04	EJL	JE			

DESIGN OVERSIGHT: BEHZAD GOLEMOHAMMADI

STATE OF CALIFORNIA - DEPARTMENT OF TRANSPORTATION

Caltrans

LAST REVISION 00-00-00

DATE PLOTTED => 7/11/2008
TIME PLOTTED => 3:02:32 PM

FOR REDUCED PLANS ORIGINAL SCALE IS IN MILLIMETERS 0 20 40 60 80

DGN FILE =>T:\13103\MS\pse\SAS Struc\CCO\SAS CC04251\CCO 42S1 Final Submittal 2008-07-11\04-0120f1_0271R02.dgn
USERNAME =>liorico

CU 04251 | EA 0120F1

CONDUIT DATA

Conduit No	Reference	Size	Type	Total Fill (mm2)	Allowable Fill (mm2)	Included Cable No.	Conductor Type
0700	E-20, E20B	103	Liquidtight flex metal conduit		3275.44	Pull rope	Soft-Fiber Polyester
0701	E-20, E20B	103	Liquidtight flex metal conduit		3275.44	Pull rope	Soft-Fiber Polyester
0702	E-20, E20B	103	Liquidtight flex metal conduit		3275.44	Pull rope	Soft-Fiber Polyester
0703	E-20, E20B	103	Liquidtight flex metal conduit		3275.44	Pull rope	Soft-Fiber Polyester
0704	E-20, E20B	103	Liquidtight flex metal conduit		3275.44	Pull rope	Soft-Fiber Polyester
0705	E-20, E20B	103	Liquidtight flex metal conduit		3275.44	Pull rope	Soft-Fiber Polyester
0706	E-20, E20B	103	Liquidtight flex metal conduit		3275.44	Pull rope	Soft-Fiber Polyester
0707	E-20, E20B	103	Liquidtight flex metal conduit		3275.44	Pull rope	Soft-Fiber Polyester
0708	E-20, E20B	103	Liquidtight flex metal conduit		3275.44	Pull rope	Soft-Fiber Polyester
0709	E-20, E20B	103	Liquidtight flex metal conduit		3275.44	Pull rope	Soft-Fiber Polyester
0710	E-20, E20B	103	Liquidtight flex metal conduit		3275.44	Pull rope	Soft-Fiber Polyester
0711	E-20, E20B	103	Liquidtight flex metal conduit		3275.44	Pull rope	Soft-Fiber Polyester
0712	E-20, E20B	103	Liquidtight flex metal conduit		3275.44	Pull rope	Soft-Fiber Polyester
0713	E-20, E20B	103	Liquidtight flex metal conduit		3275.44	Pull rope	Soft-Fiber Polyester
0714	E-20, E20B	103	Liquidtight flex metal conduit		3275.44	Pull rope	Soft-Fiber Polyester
0715	E-20, E20B	103	Liquidtight flex metal conduit		3275.44	Pull rope	Soft-Fiber Polyester
0716	E-20, E20B	103	Liquidtight flex metal conduit		3275.44	Pull rope	Soft-Fiber Polyester
0717	E-20, E20B	103	Liquidtight flex metal conduit		3275.44	Pull rope	Soft-Fiber Polyester
0718	E-20, E20B	103	Liquidtight flex metal conduit		3275.44	Pull rope	Soft-Fiber Polyester
0719	E-20, E20B	103	Liquidtight flex metal conduit		3275.44	Pull rope	Soft-Fiber Polyester
0720	E-20, E20B	103	Liquidtight flex metal conduit		3275.44	Pull rope	Soft-Fiber Polyester
0721A	E-126A	103	RGS Conduit (Pipe Sleeve)		3324.51	Pull rope	Soft-Fiber Polyester
0722A	E-126A	103	RGS Conduit (Pipe Sleeve)		3324.51	Pull rope	Soft-Fiber Polyester
0722B	E-126A	103	RGS Conduit (Pipe Sleeve)		3324.51	Pull rope	Soft-Fiber Polyester
0722C	E-126A	103	RGS Conduit (Pipe Sleeve)		3324.51	Pull rope	Soft-Fiber Polyester
0722D	E-126A	103	RGS Conduit (Pipe Sleeve)		3324.51	Pull rope	Soft-Fiber Polyester
0723A	E-126A	103	RGS Conduit (Pipe Sleeve)		3324.51	Pull rope	Soft-Fiber Polyester
0723B	E-126A	103	RGS Conduit (Pipe Sleeve)		3324.51	Pull rope	Soft-Fiber Polyester
0723C	E-126A	103	RGS Conduit (Pipe Sleeve)		3324.51	Pull rope	Soft-Fiber Polyester
0723D	E-126A	103	RGS Conduit (Pipe Sleeve)		3324.51	Pull rope	Soft-Fiber Polyester

REQUEST FOR INFORMATION NOT ADDRESSED IN THIS CCO REMAIN IN FORCE

MARK	DATE	DESCRIPTIONS	BY	CH'D	CCO#
0	02/25/08	CABLE TRAY CHANGES	RR TW	RG	42S1

REVISIONS

CONTRACT CHANGE ORDER NO. _____
SHEET _____ OF _____

Caltrans Metric

DIST	COUNTY	ROUTE	KILOMETER POST TOTAL PROJECT	SHEET No	TOTAL SHEETS
04	SF	80	13.2/13.9	357 S1	1204

REGISTERED ELECTRICAL ENGINEER 2/22/08 DATE

PLANS APPROVAL DATE

REGISTERED PROFESSIONAL ENGINEER S. A. ESTOQUE, JR. No. E-10151 Exp. 12/31/2008 ELECTRICAL STATE OF CALIFORNIA

PB AMERICAS, Inc.
A Parsons Brinckerhoff Company
303 Second St., Suite 700N
San Francisco, CA 94107-1317

The State of California or its officers or agents shall not be responsible for the accuracy or completeness of electronic copies of this plan sheet.

Caltrans now has a web site! To get to the web site, go to http://www.dot.ca.gov

CONDUIT DATA

Conduit No	Reference	Size	Type	Total Fill (mm2)	Allowable Fill (mm2)	Included Cable No.	Conductor Type
0724A	E-126A	103	RGS Conduit (Pipe Sleeve)		3324.51	Pull rope	Soft-Fiber Polyester
0724B	E-126A	103	RGS Conduit (Pipe Sleeve)		3324.51	Pull rope	Soft-Fiber Polyester
0724C	E-126A	103	RGS Conduit (Pipe Sleeve)		3324.51	Pull rope	Soft-Fiber Polyester
0724D	E-126A	103	RGS Conduit (Pipe Sleeve)		3324.51	Pull rope	Soft-Fiber Polyester
0724E	E-126A	103	RGS Conduit (Pipe Sleeve)		3324.51	Pull rope	Soft-Fiber Polyester
0724F	E-126A	103	RGS Conduit (Pipe Sleeve)		3324.51	Pull rope	Soft-Fiber Polyester

CONDUIT AND TRAY SCHEDULE

E-402A

DATE	REVISED BY	DATE REVISED

CALCULATED/DESIGNED BY
CHECKED BY

DESIGN OVERSIGHT
BEHZAD GOLEMOHAMMADI

STATE OF CALIFORNIA - DEPARTMENT OF TRANSPORTATION
Caltrans

LAST REVISION 00-00-00
DATE PLOTTED => 7/11/2008
TIME PLOTTED => 3:02:51 PM

FOR REDUCED PLANS ORIGINAL SCALE IS IN MILLIMETERS 0 20 40 60 80

DGN FILE =>T:\13103\MS\pse\SAS Struc\CCO\SAS CC04251\CCO 42S1 Final Submittal 2008-07-11\04-0120F1_0357S01.dgn
USERNAME =>llorico

CU 04251 | EA 0120F1

CONDUIT DATA

Conduit No	Reference	Size	Type	Total Fill (mm²)	Allowable Fill (mm²)	Included Cable No.	Conductor Type
0725A	E-126A	103	RGS Conduit (Pipe Sleeve)		3324.51	Pull rope	Soft-Fiber Polyester
0725B	E-126A	103	RGS Conduit (Pipe Sleeve)		3324.51	Pull rope	Soft-Fiber Polyester
0725C	E-126A	103	RGS Conduit (Pipe Sleeve)		3324.51	Pull rope	Soft-Fiber Polyester
0725D	E-126A	103	RGS Conduit (Pipe Sleeve)		3324.51	Pull rope	Soft-Fiber Polyester
0725E	E-126A	103	RGS Conduit (Pipe Sleeve)		3324.51	Pull rope	Soft-Fiber Polyester
0725F	E-126A	103	RGS Conduit (Pipe Sleeve)		3324.51	Pull rope	Soft-Fiber Polyester
0731A	E-126, E-126A	103	Liquidtight flex metal conduit		3275.44	Pull rope	Soft-Fiber Polyester
0732A	E-126, E-126A	103	Liquidtight flex metal conduit		3275.44	Pull rope	Soft-Fiber Polyester
0732B	E-126, E-126A	103	Liquidtight flex metal conduit		3275.44	Pull rope	Soft-Fiber Polyester
0732C	E-126, E-126A	103	Liquidtight flex metal conduit		3275.44	Pull rope	Soft-Fiber Polyester
0732D	E-126, E-126A	103	Liquidtight flex metal conduit		3275.44	Pull rope	Soft-Fiber Polyester
0733A	E-126, E-126A	103	Liquidtight flex metal conduit		3275.44	Pull rope	Soft-Fiber Polyester
0733B	E-126, E-126A	103	Liquidtight flex metal conduit		3275.44	Pull rope	Soft-Fiber Polyester
0733C	E-126, E-126A	103	Liquidtight flex metal conduit		3275.44	Pull rope	Soft-Fiber Polyester
0733D	E-126, E-126A	103	Liquidtight flex metal conduit		3275.44	Pull rope	Soft-Fiber Polyester
0734A	E-126, E-126A	103	Liquidtight flex metal conduit		3275.44	Pull rope	Soft-Fiber Polyester
0734B	E-126, E-126A	103	Liquidtight flex metal conduit		3275.44	Pull rope	Soft-Fiber Polyester
0734C	E-126, E-126A	103	Liquidtight flex metal conduit		3275.44	Pull rope	Soft-Fiber Polyester
0734D	E-126, E-126A	103	Liquidtight flex metal conduit		3275.44	Pull rope	Soft-Fiber Polyester
0734E	E-126, E-126A	103	Liquidtight flex metal conduit		3275.44	Pull rope	Soft-Fiber Polyester
0734F	E-126, E-126A	103	Liquidtight flex metal conduit		3275.44	Pull rope	Soft-Fiber Polyester
0735A	E-126, E-126A	103	Liquidtight flex metal conduit		3275.44	Pull rope	Soft-Fiber Polyester
0735B	E-126, E-126A	103	Liquidtight flex metal conduit		3275.44	Pull rope	Soft-Fiber Polyester
0735C	E-126, E-126A	103	Liquidtight flex metal conduit		3275.44	Pull rope	Soft-Fiber Polyester
0735D	E-126, E-126A	103	Liquidtight flex metal conduit		3275.44	Pull rope	Soft-Fiber Polyester
0735E	E-126, E-126A	103	Liquidtight flex metal conduit		3275.44	Pull rope	Soft-Fiber Polyester
0735F	E-126, E-126A	103	Liquidtight flex metal conduit		3275.44	Pull rope	Soft-Fiber Polyester

REQUEST FOR INFORMATION NOT ADDRESSED IN THIS CCO REMAIN IN FORCE

MARK	DATE	DESCRIPTIONS	BY	CH'D	CCO#
0	02/25/08	CABLE TRAY CHANGES	RR TW	RG	42S1

REVISIONS

CONTRACT CHANGE ORDER NO._____
SHEET _____ OF _____

Caltrans Metric

DIST	COUNTY	ROUTE	KILOMETER POST TOTAL PROJECT	SHEET No	TOTAL SHEETS
04	SF	80	13.2/13.9	357 S2	1204

REGISTERED ELECTRICAL ENGINEER 2/22/08 DATE

REGISTERED PROFESSIONAL ENGINEER S. A. ESTOQUE, JR. No. E-10151 Exp. 12/31/2008 ELECTRICAL STATE OF CALIFORNIA

PLANS APPROVAL DATE

PB AMERICAS, Inc.
A Parsons Brinckerhoff Company
303 Second St., Suite 700N
San Francisco, CA 94107-1317

The State of California or its officers or agents shall not be responsible for the accuracy or completeness of electronic copies of this plan sheet.

Caltrans now has a web site! To get to the web site, go to http://www.dot.ca.gov

CONDUIT DATA

Conduit No	Reference	Size	Type	Total Fill (mm²)	Allowable Fill (mm²)	Included Cable No.	Conductor Type

CONDUIT AND TRAY SCHEDULE

E-402B

STATE OF CALIFORNIA - DEPARTMENT OF TRANSPORTATION
Caltrans

DESIGN OVERSIGHT: BEHZAD GOLEMOHAMMADI
CALCULATED/DESIGNED BY
CHECKED BY
REVISED BY
DATE REVISED
DATE

LAST REVISION 00-00-00
DATE PLOTTED => 7/11/2008
TIME PLOTTED => 3:03:09 PM

FOR REDUCED PLANS ORIGINAL SCALE IS IN MILLIMETERS 0 20 40 60 80

DGN FILE =>T:\13103\MS\pse\SAS Struc\CCO\SAS CCO42S1\CCO 42S1 Final Submittal 2008-07-11\04-0120F1_0357S02.dgn
USERNAME =>llorico

CU 04251 | EA 0120F1

DIST	COUNTY	ROUTE	KILOMETER POST TOTAL PROJECT	SHEET No.	TOTAL SHEETS
04	SF	80	13.2/13.9	357 S3	1204

REGISTERED ELECTRICAL ENGINEER 2/22/08 DATE

PLANS APPROVAL DATE

REGISTERED PROFESSIONAL ENGINEER S. A. ESTOQUE, JR. No. E-10151 Exp. 12/31/2008 ELECTRICAL STATE OF CALIFORNIA

PB AMERICAS, Inc.
A Parsons Brinckerhoff Company
303 Second St., Suite 700N
San Francisco, CA 94107-1317

The State of California or its officers or agents shall not be responsible for the accuracy or completeness of electronic copies of this plan sheet.

Caltrans now has a web site! To get to the web site, go to http://www.dot.ca.gov

Caltrans Metric

REQUEST FOR INFORMATION NOT ADDRESSED IN THIS CCO REMAIN IN FORCE

MARK	DATE	DESCRIPTIONS	BY	CH'D	CCO#
0	02/25/08	CABLE TRAY CHANGES	RR TW	RG	42S1

REVISIONS

CONTRACT CHANGE ORDER NO._____
SHEET_____ OF _____

CONDUIT DATA

Conduit No	Reference	Size	Type	Total Fill (mm²)	Allowable Fill (mm²)	Included Cable No.	Conductor Type
0800	E-21, E21B	103	Liquidtight flex metal conduit		3275.44	Pull rope	Soft-Fiber Polyester
0801	E-21, E21B	103	Liquidtight flex metal conduit		3275.44	Pull rope	Soft-Fiber Polyester
0802	E-21, E21B	103	Liquidtight flex metal conduit		3275.44	Pull rope	Soft-Fiber Polyester
0803	E-21, E21B	103	Liquidtight flex metal conduit		3275.44	Pull rope	Soft-Fiber Polyester
0804	E-21, E21B	103	Liquidtight flex metal conduit		3275.44	Pull rope	Soft-Fiber Polyester
0805	E-21, E21B	103	Liquidtight flex metal conduit		3275.44	Pull rope	Soft-Fiber Polyester
0806	E-21, E21B	103	Liquidtight flex metal conduit		3275.44	Pull rope	Soft-Fiber Polyester
0807	E-21, E21B	103	Liquidtight flex metal conduit		3275.44	Pull rope	Soft-Fiber Polyester
0808	E-21, E21B	103	Liquidtight flex metal conduit		3275.44	Pull rope	Soft-Fiber Polyester
0809	E-21, E21B	103	Liquidtight flex metal conduit		3275.44	Pull rope	Soft-Fiber Polyester
0810	E-21, E21B	103	Liquidtight flex metal conduit		3275.44	Pull rope	Soft-Fiber Polyester
0811	E-21, E21B	103	Liquidtight flex metal conduit		3275.44	Pull rope	Soft-Fiber Polyester
0812	E-21, E21B	103	Liquidtight flex metal conduit		3275.44	Pull rope	Soft-Fiber Polyester
0813	E-21, E21B	103	Liquidtight flex metal conduit		3275.44	Pull rope	Soft-Fiber Polyester
0814	E-21, E21B	103	Liquidtight flex metal conduit		3275.44	Pull rope	Soft-Fiber Polyester
0815	E-21, E21B	103	Liquidtight flex metal conduit		3275.44	Pull rope	Soft-Fiber Polyester
0816	E-21, E21B	103	Liquidtight flex metal conduit		3275.44	Pull rope	Soft-Fiber Polyester
0817	E-21, E21B	103	Liquidtight flex metal conduit		3275.44	Pull rope	Soft-Fiber Polyester
0818	E-21, E21B	103	Liquidtight flex metal conduit		3275.44	Pull rope	Soft-Fiber Polyester
0819	E-21, E21B	103	Liquidtight flex metal conduit		3275.44	Pull rope	Soft-Fiber Polyester
0820	E-21, E21B	103	Liquidtight flex metal conduit		3275.44	Pull rope	Soft-Fiber Polyester
0821	E-21, E21B	103	Liquidtight flex metal conduit		3275.44	Pull rope	Soft-Fiber Polyester
0822A	E-212A	103	RGS Conduit (Pipe Sleeve)		3324.51	Pull rope	Soft-Fiber Polyester
0823A	E-212A	103	RGS Conduit (Pipe Sleeve)		3324.51	Pull rope	Soft-Fiber Polyester
0823B	E-212A	103	RGS Conduit (Pipe Sleeve)		3324.51	Pull rope	Soft-Fiber Polyester
0823C	E-212A	103	RGS Conduit (Pipe Sleeve)		3324.51	Pull rope	Soft-Fiber Polyester
0823D	E-212A	103	RGS Conduit (Pipe Sleeve)		3324.51	Pull rope	Soft-Fiber Polyester
0824A	E-212A	103	RGS Conduit (Pipe Sleeve)		3324.51	Pull rope	Soft-Fiber Polyester
0824B	E-212A	103	RGS Conduit (Pipe Sleeve)		3324.51	Pull rope	Soft-Fiber Polyester
0824C	E-212A	103	RGS Conduit (Pipe Sleeve)		3324.51	Pull rope	Soft-Fiber Polyester
0824D	E-212A	103	RGS Conduit (Pipe Sleeve)		3324.51	Pull rope	Soft-Fiber Polyester

CONDUIT DATA

Conduit No	Reference	Size	Type	Total Fill (mm²)	Allowable Fill (mm²)	Included Cable No.	Conductor Type
0825A	E-212A	103	RGS Conduit (Pipe Sleeve)		3324.51	Pull rope	Soft-Fiber Polyester
0825B	E-212A	103	RGS Conduit (Pipe Sleeve)		3324.51	Pull rope	Soft-Fiber Polyester
0825C	E-212A	103	RGS Conduit (Pipe Sleeve)		3324.51	Pull rope	Soft-Fiber Polyester
0825D	E-212A	103	RGS Conduit (Pipe Sleeve)		3324.51	Pull rope	Soft-Fiber Polyester
0825E	E-212A	103	RGS Conduit (Pipe Sleeve)		3324.51	Pull rope	Soft-Fiber Polyester
0825F	E-212A	103	RGS Conduit (Pipe Sleeve)		3324.51	Pull rope	Soft-Fiber Polyester
0826A	E-212A	103	RGS Conduit (Pipe Sleeve)		3324.51	Pull rope	Soft-Fiber Polyester
0826B	E-212A	103	RGS Conduit (Pipe Sleeve)		3324.51	Pull rope	Soft-Fiber Polyester
0826C	E-212A	103	RGS Conduit (Pipe Sleeve)		3324.51	Pull rope	Soft-Fiber Polyester
0826D	E-212A	103	RGS Conduit (Pipe Sleeve)		3324.51	Pull rope	Soft-Fiber Polyester
0826E	E-212A	103	RGS Conduit (Pipe Sleeve)		3324.51	Pull rope	Soft-Fiber Polyester
0826F	E-212A	103	RGS Conduit (Pipe Sleeve)		3324.51	Pull rope	Soft-Fiber Polyester

CONDUIT AND TRAY SCHEDULE

E-402C

STATE OF CALIFORNIA - DEPARTMENT OF TRANSPORTATION
Caltrans

DESIGN OVERSIGHT
BEHZAD GOLEMOHAMMADI

CALCULATED/DESIGNED BY
CHECKED BY

REVISED BY
DATE REVISED
DATE

LAST REVISION 00-00-00
DATE PLOTTED => 7/11/2008
TIME PLOTTED => 3:03:25 PM

FOR REDUCED PLANS ORIGINAL SCALE IS IN MILLIMETERS 0 20 40 60 80

DGN FILE =>T:\13103\MS\pse\SAS Struc\CCO\SAS CCO42S1\CCO 42S1 Final Submittal 2008-07-11\04-0120F1_0357S03.dgn
USERNAME =>florico

CU 04251 | EA 0120F1

CONDUIT DATA

Conduit No	Reference	Size	Type	Total Fill (mm2)	Allowable Fill (mm2)	Included Cable No.	Conductor Type
0832A	E-212, E212A	103	Liquidtight flex metal conduit		3275.44	Pull rope	Soft-Fiber Polyester
0833A	E-212, E212A	103	Liquidtight flex metal conduit		3275.44	Pull rope	Soft-Fiber Polyester
0833B	E-212, E212A	103	Liquidtight flex metal conduit		3275.44	Pull rope	Soft-Fiber Polyester
0833C	E-212, E212A	103	Liquidtight flex metal conduit		3275.44	Pull rope	Soft-Fiber Polyester
0833D	E-212, E212A	103	Liquidtight flex metal conduit		3275.44	Pull rope	Soft-Fiber Polyester
0834A	E-212, E212A	103	Liquidtight flex metal conduit		3275.44	Pull rope	Soft-Fiber Polyester
0834B	E-212, E212A	103	Liquidtight flex metal conduit		3275.44	Pull rope	Soft-Fiber Polyester
0834C	E-212, E212A	103	Liquidtight flex metal conduit		3275.44	Pull rope	Soft-Fiber Polyester
0834D	E-212, E212A	103	Liquidtight flex metal conduit		3275.44	Pull rope	Soft-Fiber Polyester
0835A	E-212, E212A	103	Liquidtight flex metal conduit		3275.44	Pull rope	Soft-Fiber Polyester
0835B	E-212, E212A	103	Liquidtight flex metal conduit		3275.44	Pull rope	Soft-Fiber Polyester
0835C	E-212, E212A	103	Liquidtight flex metal conduit		3275.44	Pull rope	Soft-Fiber Polyester
0835D	E-212, E212A	103	Liquidtight flex metal conduit		3275.44	Pull rope	Soft-Fiber Polyester
0835E	E-212, E212A	103	Liquidtight flex metal conduit		3275.44	Pull rope	Soft-Fiber Polyester
0835F	E-212, E212A	103	Liquidtight flex metal conduit		3275.44	Pull rope	Soft-Fiber Polyester
0836A	E-212, E212A	103	Liquidtight flex metal conduit		3275.44	Pull rope	Soft-Fiber Polyester
0836B	E-212, E212A	103	Liquidtight flex metal conduit		3275.44	Pull rope	Soft-Fiber Polyester
0836C	E-212, E212A	103	Liquidtight flex metal conduit		3275.44	Pull rope	Soft-Fiber Polyester
0836D	E-212, E212A	103	Liquidtight flex metal conduit		3275.44	Pull rope	Soft-Fiber Polyester
0836E	E-212, E212A	103	Liquidtight flex metal conduit		3275.44	Pull rope	Soft-Fiber Polyester
0836F	E-212, E212A	103	Liquidtight flex metal conduit		3275.44	Pull rope	Soft-Fiber Polyester

REQUEST FOR INFORMATION NOT ADDRESSED IN THIS CCO REMAIN IN FORCE

MARK	DATE	DESCRIPTIONS	BY	CH'D	CCO#
0	02/25/08	CABLE TRAY CHANGES	RR TW	RG	42S1

REVISIONS

CONTRACT CHANGE ORDER NO._____
SHEET _____ OF _____

Caltrans Metric

DIST	COUNTY	ROUTE	KILOMETER POST TOTAL PROJECT	SHEET No	TOTAL SHEETS
04	SF	80	13.2/13.9	357 S4	1204

REGISTERED ELECTRICAL ENGINEER 2/22/08 DATE

PLANS APPROVAL DATE

REGISTERED PROFESSIONAL ENGINEER S. A. ESTOQUE, JR. No. E-10151 Exp. 12/31/2008 ELECTRICAL STATE OF CALIFORNIA

PB AMERICAS, Inc.
A Parsons Brinckerhoff Company
303 Second St., Suite 700N
San Francisco, CA 94107-1317

The State of California or its officers or agents shall not be responsible for the accuracy or completeness of electronic copies of this plan sheet.

Caltrans now has a web site! To get to the web site, go to http://www.dot.ca.gov

CONDUIT DATA

Conduit No	Reference	Size	Type	Total Fill (mm2)	Allowable Fill (mm2)	Included Cable No.	Conductor Type

CONDUIT AND TRAY SCHEDULE

E-402D

DATE | REVISED BY | DATE REVISED

CALCULATED/DESIGNED BY | CHECKED BY

DESIGN OVERSIGHT
BEHZAD GOLEMOHAMMADI

STATE OF CALIFORNIA - DEPARTMENT OF TRANSPORTATION
Caltrans

LAST REVISION 00-00-00

DATE PLOTTED => 7/11/2008
TIME PLOTTED => 3:03:48 PM

FOR REDUCED PLANS ORIGINAL SCALE IS IN MILLIMETERS 0 20 40 60 80

DGN FILE =>T:\13103\MS\pse\SAS Struc\CCO\SAS CC042S1\CCO 42S1 Final Submittal 2008-07-11\04-0120f1_035\S04.dgn
USERNAME =>llorico

CU 04251 | EA 0120F1

CONDUIT DATA

Conduit No	Reference	Size	Type	Total Fill (mm²)	Allowable Fill (mm²)	Included Cable No.	Conductor Type
1843	E-47	41	RGS conduit	0.00	534.55	Pull rope	Soft-Fiber Polyester
1844	E-47	41	RGS conduit	0.00	534.55	Pull rope	Soft-Fiber Polyester
1845	E-47	41	RGS conduit	0.00	534.55	Pull rope	Soft-Fiber Polyester
1846	E-48	41	RGS conduit	0.00	534.55	Pull rope	Soft-Fiber Polyester
1847	E-48	41	RGS conduit	0.00	534.55	Pull rope	Soft-Fiber Polyester
1848	E-48	41	RGS conduit	0.00	534.55	Pull rope	Soft-Fiber Polyester
1849	E-48	41	RGS conduit	0.00	534.55	Pull rope	Soft-Fiber Polyester
1850	E-48	41	RGS conduit	0.00	534.55	Pull rope	Soft-Fiber Polyester
1851	E-49	41	RGS conduit	0.00	534.55	Pull rope	Soft-Fiber Polyester
1852	E-49	41	RGS conduit	0.00	534.55	Pull rope	Soft-Fiber Polyester
1853	E-49	41	RGS conduit	0.00	534.55	Pull rope	Soft-Fiber Polyester
1854	E-49	41	RGS conduit	262.06	534.55		
						UP107-3A	2 + 1 gnd #12,#12, 600 V, RHH/RHW insulation
						Pull rope	Soft-Fiber Polyester
1855	E-49	41	RGS conduit	262.06	534.55		
						UP107-3A	2 + 1 gnd #12,#12, 600 V, RHH/RHW insulation
						Pull rope	Soft-Fiber Polyester
1856	E-50	41	RGS conduit	262.06	534.55		
						UP107-3A	2 + 1 gnd #12,#12, 600 V, RHH/RHW insulation
						Pull rope	Soft-Fiber Polyester
1857	E-50	41	RGS conduit	162.40	534.55	UP107-3A	2 + 1 gnd #12,#12, 600 V, RHH/RHW insulation
						Pull rope	Soft-Fiber Polyester
1858	E-50	41	RGS conduit	0.00	534.55		
						Pull rope	Soft-Fiber Polyester
1859	E-50	41	RGS conduit	0.00	534.55	Pull rope	Soft-Fiber Polyester
1860	E-50	41	RGS conduit	0.00	534.55		
						Pull rope	Soft-Fiber Polyester
1861	E-50	41	RGS conduit	265.64	534.55	Pull rope	Soft-Fiber Polyester
						S-1032-2	3 + 1 gnd #6, #8, 600 V, RHH/RHW insulation
1862	E-50, E-51	41	RGS conduit	265.64	534.55	Pull rope	Soft-Fiber Polyester
						S-1032-2	3 + 1 gnd #6, #8, 600 V, RHH/RHW insulation
1863	E-51	41	RGS conduit	265.64	534.55	Pull rope	Soft-Fiber Polyester
						S-1032-S	3 + 1 gnd #6, #8, 600 V, RHH/RHW insulation
1864	E-51	41	RGS conduit	0.00	534.55	Pull rope	Soft-Fiber Polyester
1865	E-51	41	RGS conduit	0.00	534.55	Pull rope	Soft-Fiber Polyester
1900	E-50	41	RGS conduit	0.00	534.55	Pull rope	Soft-Fiber Polyester
1901	E-50	41	RGS conduit	0.00	534.55	Pull rope	Soft-Fiber Polyester
1902	E-50	41	RGS conduit	0.00	534.55	Pull rope	Soft-Fiber Polyester
1903	E-51	41	RGS conduit	0.00	534.55	Pull rope	Soft-Fiber Polyester
1904	E-51	41	RGS conduit	0.00	534.55	Pull rope	Soft-Fiber Polyester
1905	E-51	41	RGS conduit	0.00	534.55	Pull rope	Soft-Fiber Polyester
1906	E-51	41	RGS conduit	0.00	534.55	Pull rope	Soft-Fiber Polyester

REQUEST FOR INFORMATION NOT ADDRESSED IN THIS CCO REMAIN IN FORCE					
3	02/25/08	CABLE TRAY CHANGES	RR TW	RG	42S1
2	03/04/08	BARRIER MODIFICATIONS	JS BM	RG SE	44
1	02/19/08	ELECTRICAL MODIFICATIONS	MP EL	RR	42
MARK	DATE	DESCRIPTIONS	BY	CH'D	CCO#
		REVISIONS			

CONTRACT CHANGE ORDER NO._____
SHEET_____ OF _____

Caltrans Metric

REGISTERED PROFESSIONAL ENGINEER S. A. ESTOQUE, JR. No. E-10151 Exp. 12/31/2008 ELECTRICAL STATE OF CALIFORNIA

FOR REVISION ONLY

DIST	COUNTY	ROUTE	KILOMETER POST TOTAL PROJECT	SHEET No	TOTAL SHEETS
04	SF	80	13.2/13.9	361 R3	1204

REGISTERED ELECTRICAL ENGINEER 12/19/02 DATE

12-6-04
PLANS APPROVAL DATE

REGISTERED PROFESSIONAL ENGINEER JENS ERLINGSSON No. 8249 Exp. 9/30/06 ELECTRICAL STATE OF CALIFORNIA

PB POWER, Inc.
A Parsons Brinckerhoff Company
303 Second St., Suite 700N
San Francisco, CA 94107-1317

The State of California or its officers or agents shall not be responsible for the accuracy or completeness of electronic copies of this plan sheet.

Caltrans now has a web site! To get to the web site, go to http://www.dot.ca.gov

CONDUIT DATA

Conduit No	Reference	Size	Type	Total Fill (mm²)	Allowable Fill (mm²)	Included Cable No.	Conductor Type
1907	E-51	41	RGS conduit	0.00	534.55	Pull rope	Soft-Fiber Polyester
1908	E-51	41	RGS conduit	0.00	534.55	Pull rope	Soft-Fiber Polyester
1950	E-50	41	RGS conduit	0.00	534.55	Pull rope	Soft-Fiber Polyester
1951	E-50	41	RGS conduit	0.00	534.55	Pull rope	Soft-Fiber Polyester
1952	E-50	41	RGS conduit	0.00	534.55	Pull rope	Soft-Fiber Polyester
1953	E-51	41	RGS conduit	0.00	534.55	Pull rope	Soft-Fiber Polyester
1954	E-51	41	RGS conduit	0.00	534.55	Pull rope	Soft-Fiber Polyester
1955	E-51	41	RGS conduit	0.00	534.55	Pull rope	Soft-Fiber Polyester
1956	E-51	41	RGS conduit	0.00	534.55	Pull rope	Soft-Fiber Polyester
1957	E-51	41	RGS conduit	0.00	534.55	Pull rope	Soft-Fiber Polyester
1958	E-51	41	RGS conduit	0.00	534.55	Pull rope	Soft-Fiber Polyester
1T13	E-96, E-101	305	152.4 mm siderail ladder tray	2780.99	19354.80	1391	3-1/C #4/0 + 1/C #1/0 gnd, 15 kV, EPR insulation
3	E-126A					Pull rope	Soft-Fiber Polyester
1T14	E-20B, E-126	305	152.4 mm siderail ladder tray	2780.99	8387.08	1391	3-1/C #4/0 + 1/C #1/0 gnd, 15 kV, EPR insulation
3						Pull rope	Soft-Fiber Polyester
1T23	E-96, E-101	610	152.4 mm siderail ladder tray	13557.45	18064.48		
	E-126A 3					A-3010-1	1-3/C + gnd #2, 600 V, EPR insulation
						1115-2	1-3/C #16, 600 V, EPR insulation
						S-1031-1	1-3/C + gnd #2, 600 V, EPR insulation
						1115-1	1-3/C #14, 600 V, EPR insulation
						2201-1	1-2/C + gnd #8, 600 V, EPR insulation
						A-3009-3	1-3/C + gnd #6, 600 V, EPR insulation
						1106	1-3/C + gnd #6, 600 V, EPR insulation
						S-3056-5	1-4/C #14, 600 V, EPR insulation
						S-3056-7	1-2/C #14, 600 V, EPR insulation
						S-3056-8	1-4/C #14, 600 V, EPR insulation
						Pull rope	Soft-Fiber Polyester
						A-3010-3	1-3/C #6 + gnd 600 V, RHH/RHW insulation
						S-3051-1	1-3/C + gnd #4, 600 V, EPR insulation
						UP108-3	1-2/C + gnd #8, 600 V, EPR insulation
						1255-1	1-3/C #16 ,600V, EPR insulation
						A-3001-1	1-3/C + gnd #4, 600 V, EPR insulation
						A-3012-1	1-3/C + gnd #2, 600 V, EPR insulation
						A-3013-1	1-3/C + gnd #2, 600 V, EPR insulation
						S-3022-1	1-3/C + gnd #2, 600 V, EPR insulation
						A-3002-1	1-3/C + gnd #4, 600 V, EPR insulation
						UP107-6	1-2/C + gnd #8, 600 V, EPR insulation

For continuation, see next sheet.

CONDUIT AND TRAY SCHEDULE

E-406

REVISED BY	DATE REVISED
PBP	8/02

CALCULATED/DESIGNED BY	CHECKED BY
AB	8/02

DESIGN OVERSIGHT
BEHZAD GOLEMOHAMMADI

STATE OF CALIFORNIA - DEPARTMENT OF TRANSPORTATION
Caltrans

LAST REVISION 00-00-00
DATE PLOTTED => 7/11/2008
TIME PLOTTED => 3:04:11 PM

DIST	COUNTY	ROUTE	KILOMETER POST TOTAL PROJECT	SHEET No	TOTAL SHEETS
04	SF	80	13.2/13.9	362 R2	1204

REGISTERED ELECTRICAL ENGINEER 12/19/02 DATE

12-6-04
PLANS APPROVAL DATE

REGISTERED PROFESSIONAL ENGINEER JENS ERLINGSSON No. 8249 Exp. 9/30/06 ELECTRICAL STATE OF CALIFORNIA

PB POWER, Inc.
A Parsons Brinckerhoff Company
303 Second St., Suite 700N
San Francisco, CA 94107-1317

The State of California or its officers or agents shall not be responsible for the accuracy or completeness of electronic copies of this plan sheet.

Caltrans now has a web site! To get to the web site, go to http://www.dot.ca.gov

Caltrans Metric

REGISTERED PROFESSIONAL ENGINEER S. A. ESTOOLE, JR. No. E-10151 Exp. 12/31/2008 ELECTRICAL STATE OF CALIFORNIA

FOR REVISION ONLY

REQUEST FOR INFORMATION NOT ADDRESSED IN THIS CCO REMAIN IN FORCE

MARK	DATE	DESCRIPTIONS	BY	CH'D	CCO#
2	02/25/08	CABLE TRAY CHANGES	RR TW	RG	42S1
1	03/04/08	BARRIER MODIFICATIONS	JS BM	RG SE	44

REVISIONS

CONTRACT CHANGE ORDER NO._____
SHEET____ OF____

CONDUIT DATA

Conduit No.	Reference	Size	Type	Total Fill (mm²)	Allowable Fill (mm²)	Included Cable No.	Conductor Type
						1117-1	1-3/C #14, 600 V, EPR insulation
						A-3009-1	1-3/C + gnd #2, 600 V, EPR insulation
						1202-4	1-3/C #14, 600 V, EPR insulation
						1117-2	1-3/C #16, 600 V, EPR insulation
						S-3021-1	1-3/C + gnd #4, 600 V, EPR insulation
						S-3023-1	1-3/C + gnd #4, 600 V, EPR insulation
						S-3056-1	1-3/C + gnd #6, 600 V, EPR insulation
						S-1031-3	1-3/C + gnd #4, 600 V, EPR insulation
						S-1032-1	1-3/C + gnd #4, 600 V, EPR insulation
						A-1035-1	1-3/C + gnd #6, 600 V, EPR insulation
						1202-3	1-7/C #16, 600 V, EPR insulation
						1099	1-3/C + gnd #2, 600 V, EPR insulation
						1098	1-3/C + gnd #2, 600 V, EPR insulation
						1097	1-3/C + gnd #2, 600 V, EPR insulation
						1096	1-3/C + gnd #2, 600 V, EPR insulation
						1095	1-3/C + gnd #2, 600 V, EPR insulation
						1117	1-3/C + gnd #2/0, 600 V, EPR insulation
						1256-1	1-3/C #16, 600 V, EPR insulation
						1202-1	1-2/C + gnd #8 ,600 V, EPR insulation
						1255-2	1-3/C #16, 600 V, EPR insulation
						A-3008-1	1-2/C + gnd #8, 600 V, EPR insulation
						1202-2	1-3/C #14, 600 V, EPR insulation
						A-3011-1	1-3/C + gnd #2, 600 V, EPR insulation
1T24	E-114	610	152.4 mm siderail ladder tray	1652.27	18064.48	UP104-7	1-2/C + gnd #8, 600 V, EPR insulation
						1095	1-3/C + gnd #2, 600 V, EPR insulation
						Pull rope	Soft-Fiber Polyester
						UP104-9	1-2/C + gnd #10, 600 V, EPR insulation
						UP104-8	1-2/C + gnd #8, 600 V, EPR insulation
						1255-1	1-3/C #16, 600 V, EPR insulation
						UP104-3	1-2/C + gnd #10, 600 V, EPR insulation
						UP204-1	1-2/C + gnd #10, 600 V, EPR insulation
						UP104-6	1-2/C + gnd #8 ,600 V, EPR insulation
1T25	E-115	610	152.4 mm siderail ladder tray	3092.69	18064.48	UP105-10	1-2/C + gnd #8, 600 V, EPR insulation
						1201-1	1-2/C + gnd #8, 600 V, EPR insulation
						1201-2	1-2/C + gnd #8, 600 V, EPR insulation
						1201-6	1-2/C + gnd #8, 600 V, EPR insulation
						1096	1-3/C + gnd #2, 600 V, EPR insulation
						1255-1	1-3/C #16, 600 V, EPR insulation
						1202-4	1-3/C #14, 600 V, EPR insulation
						UP105-8	1-2/C + gnd #8, 600 V, EPR insulation
						UP205-1	1-2/C + gnd #10, 600 V, EPR insulation
						1115-1	1-3/C #14, 600 V, EPR insulation
						1202-3	1-7/C #16, 600 V, EPR insulation
						1202-2	1-3/C #14, 600 V, EPR insulation
						1115-2	1-3/C #16, 600 V, EPR insulation
						1255-2	1-3/C #16, 600 V, EPR insulation
						Pull rope	Soft-Fiber Polyester
						UP105-3	1-2/C + gnd #10, 600 V, EPR insulation
						UP105-9	1-2/C + gnd #8, 600 V, EPR insulation
						UP105-7	1-2/C + gnd #8, 600 V, EPR insulation
						S-3056-5	1-4/C #14, 600 V, EPR insulation
						S-3056-7	1-2/C #14, 600 V, EPR insulation
1T26	E-116	610	152.4 mm siderail ladder tray	2773.72	18064.48	UP106-1	1-2/C + gnd #8, 600 V, EPR insulation
						UP106-8	1-2/C + gnd #8, 600 V, EPR insulation
						UP106-3	1-2/C + gnd #8, 600 V, EPR insulation
						1255-2	1-3/C #16, 600 V, EPR insulation
						UP206-1	1-2/C + gnd #10, 600 V, EPR insulation
						Pull rope	Soft-Fiber Polyester
						1202-2	1-3/C #14, 600 V, EPR insulation
						1202-3	1-7/C #16, 600 V, EPR insulation
						UP106-6	1-2/C + gnd #8, 600 V, EPR insulation
						UP106-7	1-2/C + gnd #8, 600 V, EPR insulation
						CCTVE01BA	TVP
						CCTVE01BB	TVCP
						UP106-9	1-2/C + gnd #8, 600 V, EPR insulation
						1097	1-3/C + gnd #2, 600 V, EPR insulation
						1202-4	1-3/C #14, 600 V, EPR insulation
						1202-1	1-2/C + gnd #8, 600 V, EPR insulation
1T27	E-117	610	152.4 mm siderail ladder tray	1726.55	18064.48	UP107-6	1-2/C + gnd #8, 600 V, EPR insulation
						Pull rope	Soft-Fiber Polyester
						UP107-7	1-2/C + gnd #8, 600 V, EPR insulation
						UP107-9	1-2/C + gnd #8, 600 V, EPR insulation
						1256-1	1-3/C #16 ,600V, EPR insulation
						UP107-8	1-2/C + gnd #8, 600 V, EPR insulation

CONDUIT DATA

Conduit No.	Reference	Size	Type	Total Fill (mm²)	Allowable Fill (mm²)	Included Cable No.	Conductor Type
						1098	1-3/C + gnd #2, 600 V, EPR insulation
						UP107-3	1-2/C + gnd #8, 600 V, EPR insulation
1T28	E-118	610	152.4 mm siderail ladder tray	3336.36	18064.48	UP108-8	1-2/C + gnd #8, 600 V, EPR insulation
						UP108-3	1-2/C + gnd #8, 600 V, EPR insulation
						UP108-10	1-2/C + gnd #8, 600 V, EPR insulation
						S-3056-8	1-4/C #14, 600 V, EPR insulation
						UP108-4	1-2/C + gnd #8, 600 V, EPR insulation
						Pull rope	Soft-Fiber Polyester
						UP108-7	1-2/C + gnd #8, 600 V, EPR insulation
						1117-2	1-3/C #16 ,600V, EPR insulation
						2201-5	1-3/C #14, 600 V, EPR insulation
						2201-3	1-3/C #14, 600 V, EPR insulation
						2201-1	1-2/C + gnd #8, 600 V, EPR insulation
						2201-4	1-9/C #16, 600 V, EPR insulation
						1118-2	1-3/C #16, 600 V, EPR insulation
						UP108-9	1-2/C + gnd #8, 600 V, EPR insulation
						UP108-12	1-2/C + gnd #8, 600 V, EPR insulation
						1117-1	1-3/C #14, 600 V, EPR insulation
						1118-1	1-3/C #14, 600 V, EPR insulation
						UP108-2	1-2/C + gnd #8, 600 V, EPR insulation
						1099	1-3/C + gnd #2, 600 V, EPR insulation
						1256-1	1-3/C #16, 600 V, EPR insulation
1T29	E-20B, E-126 (2)	610	152.4 mm siderail ladder tray	11507.41	18064.48	1106	1-3/C + gnd #6, 600 V, EPR insulation
						S-1032-1	1-3/C + gnd #4, 600 V, EPR insulation
						A-3002-1	1-3/C + gnd #4, 600 V, EPR insulation
						A-3001-1	1-3/C + gnd #4, 600 V, EPR insulation
						A-3013-1	1-3/C + gnd #2, 600 V, EPR insulation
						A-3012-1	1-3/C + gnd #2, 600 V, EPR insulation
						S-3023-1	1-3/C + gnd #4, 600 V, EPR insulation
						1097	1-3/C + gnd #2, 600 V, EPR insulation
						S-3051-1	1-3/C + gnd #4, 600 V, EPR insulation
						A-1035-1	1-3/C + gnd #6, 600 V, EPR insulation
						A-3011-1	1-3/C + gnd #2, 600 V, EPR insulation
						S-3021-1	1-3/C + gnd #4, 600 V, EPR insulation
						S-3022-1	1-3/C + gnd #2, 600 V, EPR insulation
						S-3056-1	1-3/C + gnd #6, 600 V, EPR insulation
						1098	1-3/C + gnd #2, 600 V, EPR insulation
						1096	1-3/C + gnd #2, 600 V, EPR insulation
						1095	1-3/C + gnd #2, 600 V, EPR insulation
						S-1031-1	1-3/C + gnd #2, 600 V, EPR insulation
						Pull rope	Soft-Fiber Polyester
						1099	1-3/C + gnd #2, 600 V, EPR insulation
						A-3008-1	1-2/C + gnd #8, 600 V, EPR insulation
						1117	1-3/C + gnd #2/0, 600 V, EPR insulation
						A-3010-1	1-3/C + gnd #2, 600 V, EPR insulation
						1115	1-3/C + gnd #1/0, 600 V, EPR insulation
						1115-1	1-3/C #14, 600 V, EPR insulation
						1115-2	1-3/C #16, 600 V, EPR insulation
						A-3009-1	1-3/C + gnd #2, 600 V, EPR insulation

For continuation, see next sheet.

CONDUIT AND TRAY SCHEDULE

E-407

DATE	REVISED BY	DATE REVISED
8/02	PBP	AB 8/02

CALCULATED/DESIGNED BY
CHECKED BY

DESIGN OVERSIGHT
BEHZAD GOLEMOHAMMADI

STATE OF CALIFORNIA - DEPARTMENT OF TRANSPORTATION
Caltrans

LAST REVISION 00-00-00

DATE PLOTTED => 7/11/2008
TIME PLOTTED => 3:04:29 PM

FOR REDUCED PLANS ORIGINAL SCALE IS IN MILLIMETERS 0 20 40 60 80

DGN FILE =>T:\13103\MS\pse\SAS Struc\CCO\SAS CC042S1\CCO 42S1 Final Submittal 2008-07-11\04-0120f1_0362R02.dgn
USERNAME =>llorico

CU 04251 | EA 0120F1

DIST	COUNTY	ROUTE	KILOMETER POST TOTAL PROJECT	SHEET No	TOTAL SHEETS
04	SF	80	13.2/13.9	363 R2	1204

REGISTERED ELECTRICAL ENGINEER 12/19/02 DATE

12-6-04
PLANS APPROVAL DATE

REGISTERED PROFESSIONAL ENGINEER JENS ERLINGSSON No. 8249 Exp. 9/30/06 ELECTRICAL STATE OF CALIFORNIA

PB POWER, Inc.
A Parsons Brinckerhoff Company
303 Second St., Suite 700N
San Francisco, CA 94107-1317

The State of California or its officers or agents shall not be responsible for the accuracy or completeness of electronic copies of this plan sheet.

Caltrans now has a web site! To get to the web site, go to http://www.dot.ca.gov

Caltrans Metric

REGISTERED PROFESSIONAL ENGINEER S. A. ESTOQUE, JR. No. E-10151 Exp. 12/31/2008 ELECTRICAL STATE OF CALIFORNIA

FOR REVISION ONLY

REQUEST FOR INFORMATION NOT ADDRESSED IN THIS CCO REMAIN IN FORCE

MARK	DATE	DESCRIPTIONS	BY	CH'D	CCO#
2	02/25/08	CABLE TRAY CHANGES	RR TW	RG	42S1
1	03/04/08	BARRIER MODIFICATIONS	JS BM	RG SE	44

REVISIONS

CONTRACT CHANGE ORDER NO._____
SHEET_____ OF_____

CONDUIT DATA

Conduit No	Reference	Size	Type	Total Fill (mm²)	Allowable Fill (mm²)	Included Cable No.	Conductor Type
1T33	E-96, E-101 E-126A 2	610	152.4 mm siderail ladder tray	7720.94	18064.48	UP104-8	1-2/C + gnd #8, 600 V, EPR insulation
						UP108-12	1-2/C + gnd #8, 600 V, EPR insulation
						UP108-9	1-2/C + gnd #8, 600 V, EPR insulation
						A-1011-1	1-3/C + gnd #2, 600 V, EPR insulation
						A-1012-1	1-3/C + gnd #2, 600 V, EPR insulation
						UP104-3	1-2/C + gnd #10, 600 V, EPR insulation
						UP107-3	1-2/C + gnd #8, 600 V, EPR insulation
						UP105-9	1-2/C + gnd #8, 600 V, EPR insulation
						UP104-9	1-2/C + gnd #10, 600 V, EPR insulation
						Pull rope	Soft-Fiber Polyester
						UP108-4	1-2/C + gnd #8, 600 V, EPR insulation
						UP108-2	1-2/C + gnd #8, 600 V, EPR insulation
						UP108-7	1-2/C + gnd #8, 600 V, EPR insulation
						UP107-7	1-2/C + gnd #8, 600 V, EPR insulation
						UP106-7	1-2/C + gnd #8, 600 V, EPR insulation
						UP105-7	1-2/C + gnd #8, 600 V, EPR insulation
						A-1013-1	1-3/C + gnd #2, 600 V, EPR insulation
						UP107-9	1-2/C + gnd #8, 600 V, EPR insulation
						A-1014-1	1-3/C + gnd #2, 600 V, EPR insulation
						UP106-3	1-2/C + gnd #8, 600 V, EPR insulation
						UP105-3	1-2/C + gnd #10, 600 V, EPR insulation
						UP106-6	1-2/C + gnd #8, 600 V, EPR insulation
						UP105-10	1-2/C + gnd #8, 600 V, EPR insulation
						UP104-6	1-2/C + gnd #8, 600 V, EPR insulation
						UP107-8	1-2/C + gnd #8, 600 V, EPR insulation
						UP106-8	1-2/C + gnd #8, 600 V, EPR insulation
						UP105-8	1-2/C + gnd #8, 600 V, EPR insulation
						UP104-7	1-2/C + gnd #8, 600 V, EPR insulation
						UP108-8	1-2/C + gnd #8, 600 V, EPR insulation
						UP106-9	1-2/C + gnd #8, 600 V, EPR insulation
						UP108-10	1-2/C + gnd #8, 600 V, EPR insulation
1T39	E-20B, E-126 2	610	152.4 mm siderail ladder tray	1054.36	18064.48	A-1011-1	1-3/C + gnd #2, 600 V, EPR insulation
						A-1014-1	1-3/C + gnd #2, 600 V, EPR insulation
						Pull rope	Soft-Fiber Polyester
1T43	E-96, E-101 E-126A 2	610	152.4 mm siderail solid bottom tray 2	11370.25	38709.60	MVDSW04A	MVDS DLC
						1144	1 - 2 pair, shielded #18 with IS/OA , 300 V, PVC jacket
						1475-3C	12 Fiber, single mode fiberoptic cable
						1475-3A	12 Fiber, single mode fiberoptic cable
						1474-4	50 pair #18, shielded pairs, IS/OS shield 600 V, XLPE insul., PVC jacket
						1145	1 - 2 pair, shielded #18 with IS/OA , 300 V, PVC jacket
						1474-5	50 pair #18, shielded pairs, IS/OS shield 600 V, XLPE insul., PVC jacket
						1474-7	50 pair #18, shielded pairs, IS/OS shield 600 V, XLPE insul., PVC jacket
						1477-2	72 Fiber, single mode fiberoptic riser cable
						1475-3	72 Fiber, single mode fiberoptic riser cable
						MVDSW02A	MVDS DLC
						1475-3B	12 Fiber, single mode fiberoptic cable
						2900-472B	4 pair #22, shielded pairs, FEP insulation
						2900-182A	4 pair #22, shielded pairs, FEP insulation
						2900-182B	4 pair #22, shielded pairs, FEP insulation
						2900-202A	4 pair #22, shielded pairs, FEP insulation
						2900-282A	4 pair #22, shielded pairs, FEP insulation
						2900-342A	4 pair #22, shielded pairs, FEP insulation
						2900-392A	4 pair #22, shielded pairs, FEP insulation
						2900-462A	4 pair #22, shielded pairs, FEP insulation
						2900-472A	4 pair #22, shielded pairs, FEP insulation
						Pull rope	Soft-Fiber Polyester
						2900-472C	4 pair #22, shielded pairs, FEP insulation
						1474-8	50 pair #18, shielded pairs, IS/OS shield 600 V, XLPE insul., PVC jacket
						1473-5	50 pair #18, shielded pairs, IS/OS shield 600 V, XLPE insul., PVC jacket
						1473-7	50 pair #18, shielded pairs, IS/OS shield 600 V, XLPE insul., PVC jacket
						1473-10	50 pair #18, shielded pairs, IS/OS shield 600V, XLPE insul., PVC jacket

CONDUIT DATA

Conduit No	Reference	Size	Type	Total Fill (mm²)	Allowable Fill (mm²)	Included Cable No.	Conductor Type
						1474-10	50 pair #18, shielded pairs, IS/OS shield 600 V, XLPE insul., PVC jacket
						2900-462B	4 pair #22, shielded pairs, FEP insulation
1T44	E-114	610	152.4 mm siderail solid bottom tray 2	3785.76	38709.60	1473-5	50 pair #18, shielded pairs, IS/OS shield 600 V, XLPE insul., PVC jacket
						1474-5	50 pair #18, shielded pairs, IS/OS shield 600 V, XLPE insul., PVC jacket
						1475-3A	12 Fiber, single mode fiberoptic cable
						MVDSW02A	MVDS DLC
						Pull rope	Soft-Fiber Polyester
						1474-4	50 pair #18, shielded pairs, IS/OS shield 600 V, XLPE insul., PVC jacket
1T45	E-115	610	152.4 mm siderail solid bottom tray 2	3563.45	38709.60	Pull rope	Soft-Fiber Polyester
						2900-182A	4 pair #22, shielded pairs, FEP insulation
						2910-10	4 pair #22, shielded pairs, 300 V, PE insulation
						2910-8	4 pair #22, shielded pairs, 300 V, PE insulation
						1473-5	50 pair #18, shielded pairs, IS/OS shield 600 V, XLPE insul., PVC jacket
						1474-5	50 pair #18, shielded pairs, IS/OS shield 600 V, XLPE insul., PVC jacket
						1474-5B	1 - 6 pair, shielded #18 with overall shield , 300 V, PVC jacket
						1474-5A	1 - 6 pair, shielded #18 with overall shield , 300 V, PVC jacket
						2900-472C	4 pair #22, shielded pairs, FEP insulation
						2900-182B	4 pair #22, shielded pairs, FEP insulation
						2900-472A	4 pair #22, shielded pairs, FEP insulation
						2900-462B	4 pair #22, shielded pairs, FEP insulation
						2900-462A	4 pair #22, shielded pairs, FEP insulation
						2900-392A	4 pair #22, shielded pairs, FEP insulation
						2900-342A	4 pair #22, shielded pairs, FEP insulation
						2900-282A	4 pair #22, shielded pairs, FEP insulation
						2910-7	4 pair #24, overall shielded, 30 V, PE insulation
						2900-472B	4 pair #22, shielded pairs, FEP insulation
						2900-202A	4 pair #22, shielded pairs, FEP insulation
1T46	E-118	610	152.4 mm siderail solid bottom tray 2	2757.87	38709.60	CCTVE01BD	TVL
						1474-7	50 pair #18, shielded pairs, IS/OS shield 600 V, XLPE insul., PVC jacket
						MVDSW03A	MVDS DLC
						CCTVE01BC	TVC
						1475-3B	12 Fiber, single mode fiberoptic cable
						Pull rope	Soft-Fiber Polyester
						1473-7	50 pair #18, shielded pairs, IS/OS shield 600 V, XLPE insul., PVC jacket

For continuation, see next sheet.

CONDUIT AND TRAY SCHEDULE

E-408

REVISED BY	DATE REVISED
PBP	8/02

CALCULATED/DESIGNED BY	DATE 8/02
CHECKED BY	AB

DESIGN OVERSIGHT
BEHZAD GOLEMOHAMMADI

STATE OF CALIFORNIA - DEPARTMENT OF TRANSPORTATION
Caltrans

LAST REVISION 00-00-00

DATE PLOTTED => 7/11/2008
TIME PLOTTED => 3:05:06 PM

FOR REDUCED PLANS ORIGINAL SCALE IS IN MILLIMETERS 0 20 40 60 80

DGN FILE =>T:\13103\MS\pse\SAS Struc\CCO\SAS CC042S1\CCO 42S1 Final Submittal 2008-07-11\04-0120f1_0363R02.dgn
USERNAME =>llorico

CU 04251 | EA 0120F1

DIST	COUNTY	ROUTE	KILOMETER POST TOTAL PROJECT	SHEET No	TOTAL SHEETS
04	SF	80	13.2/13.9	363 S1	1204

REGISTERED ELECTRICAL ENGINEER 12/19/02 DATE

12-6-04
PLANS APPROVAL DATE

REGISTERED PROFESSIONAL ENGINEER JENS ERLINGSSON No. 8249 Exp. 9/30/06 ELECTRICAL STATE OF CALIFORNIA

PB POWER, Inc.
A Parsons Brinckerhoff Company
303 Second St., Suite 700N
San Francisco, CA 94107-1317

The State of California or its officers or agents shall not be responsible for the accuracy or completeness of electronic copies of this plan sheet.

Caltrans now has a web site! To get to the web site, go to http://www.dot.ca.gov

Caltrans Metric

REGISTERED PROFESSIONAL ENGINEER S. A. ESTOQUE, JR. No. E-10151 Exp. 12/31/2008 ELECTRICAL STATE OF CALIFORNIA

FOR REVISION ONLY

REQUEST FOR INFORMATION NOT ADDRESSED IN THIS CCO REMAIN IN FORCE

MARK	DATE	DESCRIPTIONS	BY	CH'D	CCO#
0	02/25/08	CABLE TRAY CHANGES	TW	RG	42S1

REVISIONS

CONTRACT CHANGE ORDER NO. _____
SHEET _____ OF _____

CONDUIT DATA

Conduit No	Reference	Size	Type	Total Fill (mm²)	Allowable Fill (mm²)	Included Cable No.	Conductor Type
1T14A	E-20, E20E	305	152.4 mm siderail ladder tray	0.00	8387.08	Pull rope	Soft-Fiber Polyester
1T14B	E-20, E20E	305	152.4 mm siderail ladder tray	0.00	8387.08	Pull rope	Soft-Fiber Polyester
1T23A	E-126A	610	152.4 mm siderail ladder tray	0.00	16774.16	Pull rope	Soft-Fiber Polyester
1T29A	E-20 E20E	610	152.4 mm siderail ladder tray	0.00	16774.16	Pull rope	Soft-Fiber Polyester
1T29B	E-20, E20E	610	152.4 mm siderail ladder tray	0.00	16774.16	Pull rope	Soft-Fiber Polyester
1T33A	E-126A	610	152.4 mm siderail ladder tray	0.00	16774.16	Pull rope	Soft-Fiber Polyester
1T39A	E-20 E20E	610	152.4 mm siderail ladder tray	0.00	16774.16	Pull rope	Soft-Fiber Polyester
1T39B	E-20, E20E	610	152.4 mm siderail ladder tray	0.00	16774.16	Pull rope	Soft-Fiber Polyester
1T43A	E-126A	305	152.4 mm siderail isolid bottom tray	0.00	8387.08	Pull rope	Soft-Fiber Polyester
1T49A	E-20, E20E	610	152.4 mm siderail isolid bottom tray	0.00	16774.16	Pull rope	Soft-Fiber Polyester
1T49B	E-20, E20E	610	152.4 mm siderail ladder tray	0.00	16774.16	Pull rope	Soft-Fiber Polyester
1T54A	E-20, E20E	610	152.4 mm siderail ladder tray	0.00	16774.16	Pull rope	Soft-Fiber Polyester
1T54B	E-20, E20E	610	152.4 mm siderail ladder tray	0.00	16774.16	Pull rope	Soft-Fiber Polyester

CONDUIT DATA

Conduit No	Reference	Size	Type	Total Fill (mm²)	Allowable Fill (mm²)	Included Cable No.	Conductor Type

For continuation, see next sheet.

CONDUIT AND TRAY SCHEDULE

E-408A

REVISED BY	DATE	DATE REVISED
PBP	8/02	8/02

CALCULATED/DESIGNED BY: PBP
CHECKED BY: AB

DESIGN OVERSIGHT: BEHZAD GOLEMOHAMMADI

STATE OF CALIFORNIA - DEPARTMENT OF TRANSPORTATION
Caltrans

LAST REVISION 00-00-00

DATE PLOTTED => 7/11/2008
TIME PLOTTED => 3:05:26 PM

FOR REDUCED PLANS ORIGINAL SCALE IS IN MILLIMETERS 0 20 40 60 80

DGN FILE =>T:\13103\MS\pse\SAS Struc\CCO\SAS CC042S1\CCO 42S1 Final Submittal 2008-07-11\04-0120f1_0363S01.dgn
USERNAME =>tlorico

CU 04251 | EA 0120F1

DIST	COUNTY	ROUTE	KILOMETER POST TOTAL PROJECT	SHEET No	TOTAL SHEETS
04	SF	80	13.2/13.9	364 R2	1204

REGISTERED ELECTRICAL ENGINEER 12/19/02 DATE

12-6-04
PLANS APPROVAL DATE

REGISTERED PROFESSIONAL ENGINEER JENS ERLINGSSON No. 8249 Exp. 9/30/06 ELECTRICAL STATE OF CALIFORNIA

PB POWER, Inc.
A Parsons Brinckerhoff Company
303 Second St., Suite 700N
San Francisco, CA 94107-1317

The State of California or its officers or agents shall not be responsible for the accuracy or completeness of electronic copies of this plan sheet.

Caltrans now has a web site! To get to the web site, go to http://www.dot.ca.gov

Caltrans Metric

REGISTERED PROFESSIONAL ENGINEER S. A. ESTOQUE, JR. No. E-10151 Exp. 12/31/2008 ELECTRICAL STATE OF CALIFORNIA

FOR REVISION ONLY

REQUEST FOR INFORMATION NOT ADDRESSED IN THIS CCO REMAIN IN FORCE

MARK	DATE	DESCRIPTIONS	BY	CH'D	CCO#
2	02/25/08	CABLE TRAY CHANGES	TW	RG	42S1
1	03/04/08	BARRIER MODIFICATIONS	JS BM	RG SE	44

REVISIONS

CONTRACT CHANGE ORDER NO._____
SHEET____ OF ____

CONDUIT DATA

Conduit No	Reference	Size	Type	Total Fill (mm²)	Allowable Fill (mm²)	Included Cable No.	Conductor Type
1T47	E-117	610	152.4 mm siderail solid bottom tray 2	3785.76	38709.60	Pull rope	Soft-Fiber Polyester
						MVDSW04A	MVDS DLC
						1474-7	50 pair #18, shielded pairs, IS/OS shield 600 V, XLPE insul., PVC jacket
						1473-7	50 pair #18, shielded pairs, IS/OS shield 600 V, XLPE insul., PVC jacket
						1474-8	50 pair #18, shielded pairs, IS/OS shield 600 V, XLPE insul., PVC jacket
						1475-3C	12 Fiber, single mode fiberoptic cable
1T48	E-118	610	152.4 mm siderail solid bottom tray 2	2157.13	38709.60		
						Pull rope	Soft-Fiber Polyester
						1474-8A	1 - 6 pair, shielded #18 with overall shield , 300 V, PVC jacket
						1474-8B	1 - 6 pair, shielded #18 with overall shield , 300 V, PVC jacket
						1474-10	50 pair #18, shielded pairs, IS/OS shield 600 V, XLPE insul., PVC jacket
						1474-8	50 pair #18, shielded pairs, IS/OS shield 600 V, XLPE insul., PVC jacket
						1473-10	50 pair #18, shielded pairs, IS/OS shield 600 V, XLPE insul., PVC jacket
1T49	E-20B, E-126	305	152.4 mm siderail solid bottom tray 2	1849.01	19354.80	Pull rope	Soft-Fiber Polyester
						1474-4	50 pair #18, shielded pairs, IS/OS shield 600 V, XLPE insul., PVC jacket
						1475-3	72 Fiber, single mode fiberoptic riser cable
						1477-2	72 Fiber, single mode fiberoptic riser cable
1T53	E-96, E-126A, E-101	610	152.4 mm siderail solid bottom tray 2	0.00	16774.16	Pull rope	Soft-Fiber Polyester
1T54	E-20B, E-126	610	152.4 mm siderail ladder tray	0.00	16774.16	Pull rope	Soft-Fiber Polyester
2000	E-96	41	RGS conduit	323.69	534.55	UP104-7-1	1-2/C + gnd #8,600 V, EPR insulation
						UP104-8-2	2 + 1 gnd #8,#10, 600 V, RHH/RHW insulation
2001	E-96	53	RGS conduit	809.26	879.42	UP104-9	1-2/C + gnd #10,600 V, EPR insulation
						UP104-8	1-2/C + gnd #8,600 V, EPR insulation
						UP104-6	1-2/C + gnd #8,600 V, EPR insulation
						UP104-7	1-2/C + gnd #8,600 V, EPR insulation
2002	E-96	63	RGS conduit	905.49	1663.73	UP104-8-2	2 + 1 gnd #8,#10, 600 V, RHH/RHW insulation
						UP104-6	1-2/C + gnd #8,600 V, EPR insulation
						UP104-9	1-2/C + gnd #10,600 V, EPR insulation
						UP104-7	1-2/C + gnd #8,600 V, EPR insulation
						UP104-8	1-2/C + gnd #8,600 V, EPR insulation
2003	E-96	41	RGS conduit	192.46	534.55	UP104-9-2	2 + 1 gnd #8,#10, 600 V, RHH/RHW insulation
						UP104-6A	2 + 1 gnd #8,#10, 600 V, RHH/RHW insulation
2004	E-96	53	RGS conduit	811.22	879.42	UP104-7	1-2/C + gnd #8,600 V, EPR insulation
						UP104-8-1	3 + 1 gnd #8,#10, 600 V, RHH/RHW insulation
						UP104-8-2	2 + 1 gnd #8,#10, 600 V, RHH/RHW insulation
						UP104-9	1-2/C + gnd #10,600 V, EPR insulation
						UP104-6	1-2/C + gnd #8,600 V, EPR insulation
2005	E-96	41	RGS conduit	192.46	534.55	UP104-6b	2 + 1 gnd #8,#10, 600 V, RHH/RHW insulation
						UP104-9-1	2 + 1 gnd #8,#10, 600 V, RHH/RHW insulation
2006	E-96	53	RGS conduit	811.22	879.42	UP104-9	1-2/C + gnd #10,600 V, EPR insulation
						UP104-6	1-2/C + gnd #8,600 V, EPR insulation
						UP104-8-2	2 + 1 gnd #8,#10, 600 V, RHH/RHW insulation
						UP104-8-1	3 + 1 gnd #8,#10, 600 V, RHH/RHW insulation
						UP104-7	1-2/C + gnd #8,600 V, EPR insulation
2007	E-97	41	RGS conduit	354.34	534.55	UP104-9	1-2/C + gnd #10,600 V, EPR insulation
						UP104-6	1-2/C + gnd #8,600 V, EPR insulation
2008	E-97	53	RGS conduit	456.88	879.42	UP104-8-2	2 + 1 gnd #8,#10, 600 V, RHH/RHW insulation
						UP104-8-1	3 + 1 gnd #8,#10, 600 V, RHH/RHW insulation
						UP105-7-1	1-2/C + gnd #8,600 V, EPR insulation
2009	E-97	63	RGS conduit	909.84	1663.73	UP105-7	1-2/C + gnd #8,600 V, EPR insulation
						UP105-9	1-2/C + gnd #8,600 V, EPR insulation
						UP105-10	1-2/C + gnd #8,600 V, EPR insulation
						UP105-8	1-2/C + gnd #8,600 V, EPR insulation

CONDUIT DATA

Conduit No	Reference	Size	Type	Total Fill (mm²)	Allowable Fill (mm²)	Included Cable No.	Conductor Type
2010	E-97	63	RGS conduit	1139.26	1663.73	UP104-8-2	2 + 1 gnd #8,#10, 600 V, RHH/RHW insulation
						UP104-8-1	3 + 1 gnd #8,#10, 600 V, RHH/RHW insulation
						UP105-8	1-2/C + gnd #8,600 V, EPR insulation
						UP105-7	1-2/C + gnd #8,600 V, EPR insulation
						UP105-9	1-2/C + gnd #8,600 V, EPR insulation
						UP105-10	1-2/C + gnd #8,600 V, EPR insulation
2011	E-97	41	RGS conduit	192.46	534.55	UP105-10A	2 + 1 gnd #8,#10, 600 V, RHH/RHW insulation
						UP105-9-2	2 + 1 gnd #8,#10, 600 V, RHH/RHW insulation
2012	E-97	63	RGS conduit	911.80	1663.73	UP105-9	1-2/C + gnd #8,600 V, EPR insulation
						UP105-10	1-2/C + gnd #8,600 V, EPR insulation
						UP105-8-1	3 + 1 gnd #8,#10, 600 V, RHH/RHW insulation
						UP105-7	1-2/C + gnd #8,600 V, EPR insulation
						UP105-8-2	2 + 1 gnd #8,#10, 600 V, RHH/RHW insulation
2013	E-97	41	RGS conduit	192.46	534.55	UP105-10b	2 + 1 gnd #8,#10, 600 V, RHH/RHW insulation
						UP105-9-1	2 + 1 gnd #8,#10, 600 V, RHH/RHW insulation
2014	E-97	63	RGS conduit	911.80	1663.73	UP105-10	1-2/C + gnd #8,600 V, EPR insulation
						UP105-8-1	3 + 1 gnd #8,#10, 600 V, RHH/RHW insulation
						UP105-8-2	2 + 1 gnd #8,#10, 600 V, RHH/RHW insulation
						UP105-7	1-2/C + gnd #8,600 V, EPR insulation
						UP105-9	1-2/C + gnd #8,600 V, EPR insulation
2015	E-97	41	RGS conduit	454.92	534.55	UP105-10	1-2/C + gnd #8,600 V, EPR insulation
						UP105-9	1-2/C + gnd #8,600 V, EPR insulation
2016	E-97	63	RGS conduit	229.42	1663.73	UP105-8-1	3 + 1 gnd #8,#10, 600 V, RHH/RHW insulation
						UP105-8-2	2 + 1 gnd #8,#10, 600 V, RHH/RHW insulation
2017	E-98	63	RGS conduit	909.84	1663.73	UP106-6	1-2/C + gnd #8,600 V, EPR insulation
						UP106-8	1-2/C + gnd #8,600 V, EPR insulation
						UP106-7	1-2/C + gnd #8,600 V, EPR insulation
						UP106-9	1-2/C + gnd #8,600 V, EPR insulation
2018	E-98	63	RGS conduit	1139.26	1663.73	UP106-7	1-2/C + gnd #8,600 V, EPR insulation
						UP106-9	1-2/C + gnd #8,600 V, EPR insulation
						UP106-6	1-2/C + gnd #8,600 V, EPR insulation
						UP105-8-1	3 + 1 gnd #8,#10, 600 V, RHH/RHW insulation
						UP105-8-2	2 + 1 gnd #8,#10, 600 V, RHH/RHW insulation
						UP106-8	1-2/C + gnd #8,600 V, EPR insulation
2019	E-98	41	RGS conduit	323.69	534.55	UP106-6A	1-2/C + gnd #8,600 V, EPR insulation
						UP106-9-2	2 + 1 gnd #8,#10, 600 V, RHH/RHW insulation
2020	E-98	63	RGS conduit	911.80	1663.73	UP106-6	1-2/C + gnd #8,600 V, EPR insulation
						UP106-8-1	3 + 1 gnd #8,#10, 600 V, RHH/RHW insulation
						UP106-7	1-2/C + gnd #8,600 V, EPR insulation
						UP106-8-2	2 + 1 gnd #8,#10, 600 V, RHH/RHW insulation
						UP106-9	1-2/C + gnd #8,600 V, EPR insulation

For continuation, see next sheet.

CONDUIT AND TRAY SCHEDULE

E-409

STATE OF CALIFORNIA - DEPARTMENT OF TRANSPORTATION
Caltrans

DESIGN OVERSIGHT
BEHZAD GOLEMOHAMMADI

CALCULATED/DESIGNED BY PBP
CHECKED BY AB
DATE 8/02
REVISED BY
DATE REVISED 8/02

LAST REVISION 00-00-00
DATE PLOTTED => 7/11/2008
TIME PLOTTED => 3:05:43 PM

FOR REDUCED PLANS ORIGINAL SCALE IS IN MILLIMETERS 0 20 40 60 80

DGN FILE =>T:\13103\MS\pse\SAS Struc\CCO\SAS CCO42S1\CCO 42S1 Final Submittal 2008-07-11\04-0120F1_0364R02.dgn
USERNAME =>llorico

CU 04251 | EA 0120F1

DIST	COUNTY	ROUTE	KILOMETER POST TOTAL PROJECT	SHEET No	TOTAL SHEETS
04	SF	80	13.2/13.9	373 R2	1204

Jens Erlingsson 12/19/02
REGISTERED ELECTRICAL ENGINEER DATE

12-6-04
PLANS APPROVAL DATE

REGISTERED PROFESSIONAL ENGINEER JENS ERLINGSSON No. 8249 Exp. 9/30/06 ELECTRICAL STATE OF CALIFORNIA

PB POWER, Inc.
A Parsons Brinckerhoff Company
303 Second St., Suite 700N
San Francisco, CA 94107-1317

The State of California or its officers or agents shall not be responsible for the accuracy or completeness of electronic copies of this plan sheet.

Caltrans now has a web site! To get to the web site, go to: http://www.dot.ca.gov

Caltrans Metric

REGISTERED PROFESSIONAL ENGINEER S. A. ESTOQUE, JR. No. E-10151 Exp. 12/31/2008 ELECTRICAL STATE OF CALIFORNIA

FOR REVISION ONLY

REQUEST FOR INFORMATION NOT ADDRESSED IN THIS CCO REMAIN IN FORCE

MARK	DATE	DESCRIPTIONS	BY	CH'D	CCO#
2	02/25/08	CABLE TRAY CHANGES	TW	RG	42S1
1	03/04/08	BARRIER MODIFICATIONS	JS BM	RG SE	44

REVISIONS

CONTRACT CHANGE ORDER NO._____
SHEET____ OF____

CONDUIT DATA

Conduit No	Reference	Size	Type	Total Fill (mm²)	Allowable Fill (mm²)	Included Cable No.	Conductor Type
2959	E-139	41	RGS conduit	0.00	534.55	Pull rope	Soft-Fiber Polyester
2960	E-139	41	RGS conduit	212.85	534.55	LP223-2,4A	3 + 1 gnd #6,#8, 600 V, RHH/RHW insulation
						Pull rope	Soft-Fiber Polyester
2961	E-139	41	RGS conduit	0.00	534.55	Pull rope	Soft-Fiber Polyester
2962	E-138	41	RGS conduit	0.00	534.55	Pull rope	Soft-Fiber Polyester
2963	E-138	41	RGS conduit	0.00	534.55	Pull rope	Soft-Fiber Polyester
2964	E-138	41	RGS conduit	0.00	534.55	Pull rope	Soft-Fiber Polyester
2965	E-138	41	RGS conduit	0.00	534.55	Pull rope	Soft-Fiber Polyester
2966	E-138	41	RGS conduit	0.00	534.55	Pull rope	Soft-Fiber Polyester
2967	E-138	41	RGS conduit	0.00	534.55	Pull rope	Soft-Fiber Polyester
2T13	E-181 Thru E-186	305	152.4 mm siderail ladder tray	2780.99	8387.08	Pull rope	Soft-Fiber Polyester
	E-212A (2)					2391	3-1/C #4/0 + 1/C #1/0 gnd, 15kV, EPR insulation
2T14	E-212, E-21B (2)	305	152.4 mm siderail ladder tray	2780.99	8387.08	Pull rope	Soft-Fiber Polyester
						2391	3-1/C #4/0 + 1/C #1/0 gnd, 15kV, EPR insulation
2T14A	E-21, E-21E	305	152.4 mm siderail ladder tray	0.00	12580.62		
2T14B	E-21, E-21E	305	152.4 mm siderail ladder tray	0.00	12580.62	(2)	
2T21	E182,E207C,E264	610	152.4 mm siderail ladder tray	0.00	16774.16		
2T23	E-181 Thru E-186	760	152.4 mm siderail ladder tray	19079.92	22580.60	2202-2	1-3/C #14,600 V, EPR insulation
	E-212A (2)					A-3004-1	1-3/C + gnd #2,600 V, EPR insulation
						A-3003-1	1-3/C + gnd #4,600 V, EPR insulation
						A-2013-1	1-3/C + gnd #2,600 V, EPR insulation
						A-2012-1	1-3/C + gnd #2,600 V, EPR insulation
						2123	1-3/C + gnd #2,600 V, EPR insulation
						2202-3	1-7/C #16,600 V, EPR insulation
						2105	1-3/C + gnd #2,600 V, EPR insulation
						2106	1-3/C + gnd #2,600 V, EPR insulation
						2120-1	1-3/C #14,600 V, EPR insulation
						2120-2	1-3/C #14,600 V, EPR insulation
						2202-4	1-3/C #14,600 V, EPR insulation
						2104	1-3/C + gnd #2,600 V, EPR insulation
						2121	1-3/C + gnd #1/0,600 V, EPR insulation
						2204-1	1-3/C #16,600 V, EPR insulation
						UP204-7	1-2/C + gnd #8,600 V, EPR insulation
						2119-A	1-3/C + gnd 250 Kcmil,600 V, EPR insulation
						CCTVE01BA	TVP
						CCTVE01BB	TVCP
						CCTVE01AA	TVP
						2121-2	1-3/C #14,600 V, EPR insulation
						2201-2	1-2/C + gnd #8,600 V, EPR insulation
						2123-2	1-3/C + gnd #2/0,600 V, EPR insulation
						2123-3	1-3/C + gnd #2/0,600 V, EPR insulation
						1118	1-3/C + gnd #2/0,600 V, EPR insulation
						2095	1-3/C + gnd #2,600 V, EPR insulation
						2096	1-3/C + gnd #2,600 V, EPR insulation
						2097	1-3/C + gnd #2,600 V, EPR insulation
						2098	1-3/C + gnd #2,600 V, EPR insulation
						2099	1-3/C + gnd #2,600 V, EPR insulation
						S-3053-1	1-3/C + gnd #2,600 V, EPR insulation
						2107	1-3/C + gnd #2,600 V, EPR insulation
						2120	1-3/C + gnd #1/0,600 V, EPR insulation
						2201-6	1-2/C + gnd #8,600 V, EPR insulation
						1201-1	1-2/C + gnd #8,600 V, EPR insulation
						2202-1	1-2/C + gnd #8,600 V, EPR insulation
						2204-2	1-3/C #16,600 V, EPR insulation
						Pull rope	Soft-Fiber Polyester
						A-3041-1	1-3/C + gnd #2,600 V, EPR insulation
						S-3052-1	1-3/C + gnd #2,600 V, EPR insulation
						2125	1-3/C + gnd 250 Kcmil,600 V, EPR insulation
						2103	1-3/C + gnd #2,600 V, EPR insulation
						S-3056-9	1-4/C #14,600 V, EPR insulation
						CCTVE01AB	TVCP
						2121-1	1-3/C #14,600 V, EPR insulation
						S-3056-6	1-4/C #14,600 V, EPR insulation

CONDUIT DATA

Conduit No	Reference	Size	Type	Total Fill (mm²)	Allowable Fill (mm²)	Included Cable No.	Conductor Type
2T24	E-114, E-182	610	152.4 mm siderail ladder tray	2284.74	18064.48	LP219-2,4	1-3/C + gnd #6,600 V, EPR insulation
						LP219-6,8	1-3/C + gnd #6,600 V, EPR insulation
						Pull rope	Soft-Fiber Polyester
						UP204-7	1-2/C + gnd #8,600 V, EPR insulation
						UP204-1	1-2/C + gnd #10,600 V, EPR insulation
						UP204-8	1-2/C + gnd #8,600 V, EPR insulation
						2103	1-3/C + gnd #2,600 V, EPR insulation
						2095	1-3/C + gnd #2,600 V, EPR insulation
2T25	E-115, E-182	610	152.4 mm siderail ladder tray	3606.85	18064.48	UP205-7	1-2/C + gnd #8,600 V, EPR insulation
						UP205-1	1-2/C + gnd #10,600 V, EPR insulation
						LP220-6,8	1-3/C + gnd #6,600 V, EPR insulation
						LP220-2,4	1-3/C + gnd #6,600 V, EPR insulation
						Pull rope	Soft-Fiber Polyester
						S-3056-6	1-4/C #14,600 V, EPR insulation
						UP205-6	1-2/C + gnd #8,600 V, EPR insulation
						2202-2	1-3/C #14,600 V, EPR insulation
						2120-1	1-3/C #14,600 V, EPR insulation
						2204-2	1-3/C #16,600 V, EPR insulation
						2121-2	1-3/C #14,600 V, EPR insulation
						2096	1-3/C + gnd #2,600 V, EPR insulation
						2204-1	1-3/C #16,600 V, EPR insulation
						2104	1-3/C + gnd #2,600 V, EPR insulation
						UP205-8	1-2/C + gnd #8,600 V, EPR insulation
						2202-4	1-3/C #14,600 V, EPR insulation
						2202-3	1-7/C #16,600 V, EPR insulation
						2120-2	1-3/C #14,600 V, EPR insulation
						2121-1	1-3/C #14,600 V, EPR insulation
2T26	E-117, E-183	610	152.4 mm siderail ladder tray	3296.85	18064.48	2202-1	1-2/C + gnd #8,600 V, EPR insulation
						CCTVE01BA	TVP
						LP221-2,4	1-3/C + gnd #6,600 V, EPR insulation
						Pull rope	Soft-Fiber Polyester
						CCTVE01AB	TVCP
						CCTVE01AA	TVP
						CCTVE01BB	TVCP
						LP221-6,8	1-3/C + gnd #6,600 V, EPR insulation
						UP206-7	1-2/C + gnd #8,600 V, EPR insulation
						UP207-1	1-2/C + gnd #10,600 V, EPR insulation
						UP206-1	1-2/C + gnd #10,600 V, EPR insulation
						2202-2	1-3/C #14,600 V, EPR insulation
						2105	1-3/C + gnd #2,600 V, EPR insulation
						2097	1-3/C + gnd #2,600 V, EPR insulation
						UP206-8	1-2/C + gnd #8,600 V, EPR insulation
						2202-4	1-3/C #14,600 V, EPR insulation
						2202-3	1-7/C #16,600 V, EPR insulation

For continuation, see next sheet.

CONDUIT AND TRAY SCHEDULE

E-418

STATE OF CALIFORNIA - DEPARTMENT OF TRANSPORTATION
Caltrans

DESIGN OVERSIGHT: BEHZAD GOLEMOHAMMADI

CALCULATED/DESIGNED BY: PBP | CHECKED BY: AB | DATE REVISED: 8/02 | REVISED BY: DATE 8/02

DATE PLOTTED => 7/11/2008
TIME PLOTTED => 3:06:06 PM

LAST REVISION 00-00-00

FOR REDUCED PLANS ORIGINAL SCALE IS IN MILLIMETERS 0 20 40 60 80

DGN FILE =>T:\13103\MS\pse\SAS Struc\CCO\SAS CCO4251\CCO 42S1 Final Submittal 2008-07-11\04-0120f1_0373R02.dgn
USERNAME =>llorico

CU 04251 | EA 0120F1

DIST	COUNTY	ROUTE	KILOMETER POST TOTAL PROJECT	SHEET No	TOTAL SHEETS
04	SF	80	13.2/13.9	374 R2	1204

Jens Erlingsson 12/19/02
REGISTERED ELECTRICAL ENGINEER DATE

12-6-04
PLANS APPROVAL DATE

REGISTERED PROFESSIONAL ENGINEER JENS ERLINGSSON No. 8249 Exp. 9/30/06 ELECTRICAL STATE OF CALIFORNIA

PB POWER, Inc.
A Parsons Brinckerhoff Company
303 Second St., Suite 700N
San Francisco, CA 94107-1317

The State of California or its officers or agents shall not be responsible for the accuracy or completeness of electronic copies of this plan sheet.

Caltrans now has a web site! To get to the web site, go to: http://www.dot.ca.gov

Caltrans Metric

REGISTERED PROFESSIONAL ENGINEER S. A. ESTOOLE, JR. No. E-10151 Exp. 12/31/2008 ELECTRICAL STATE OF CALIFORNIA

FOR REVISION ONLY

CONTRACT CHANGE ORDER NO._____
SHEET_____ OF_____

REQUEST FOR INFORMATION NOT ADDRESSED IN THIS CCO REMAIN IN FORCE

MARK	DATE	DESCRIPTIONS	BY	CH'D	CCO#
2	02/25/08	CABLE TRAY CHANGES	TW	RG	42S1
1	03/04/08	BARRIER MODIFICATIONS	JS BM	RG SE	44

REVISIONS

CONDUIT DATA

Conduit No	Reference	Size	Type	Total Fill (mm²)	Allowable Fill (mm²)	Included Cable No.	Conductor Type
2T27	E-118, E-184	610	152.4 mm siderail ladder tray	2157.86	18064.48	LP222-6,8	1-3/C + gnd #6,600 V, EPR insulation
						2098	1-3/C + gnd #2,600 V, EPR insulation
						2106	1-3/C + gnd #2,600 V, EPR insulation
						UP207-8	1-2/C + gnd #8,600 V, EPR insulation
						UP207-7	1-2/C + gnd #8,600 V, EPR insulation
						Pull rope	Soft-Fiber Polyester
						LP222-2,4	1-3/C + gnd #6,600 V, EPR insulation
2T28	E-119, E-185	610	152.4 mm siderail ladder tray	3847.88	18064.48	UP208-4	1-2/C + gnd #8,600 V, EPR insulation
						UP208-6	1-2/C + gnd #8,600 V, EPR insulation
						Pull rope	Soft-Fiber Polyester
						LP223-2,4	1-3/C + gnd #6,600 V, EPR insulation
						UP208-2	1-2/C + gnd #8,600 V, EPR insulation
						UP208-7	1-2/C + gnd #8,600 V, EPR insulation
						2107	1-3/C + gnd #2,600 V, EPR insulation
						LP223-6,8	1-3/C + gnd #6,600 V, EPR insulation
						2201-5	1-3/C #14,600 V, EPR insulation
						UP208-8	1-2/C + gnd #8,600 V, EPR insulation
						1118-1	1-3/C #14,600 V, EPR insulation
						2201-6	1-2/C + gnd #8,600 V, EPR insulation
						S-3056-9	1-4/C #14,600 V, EPR insulation
						2099	1-3/C + gnd #2,600 V, EPR insulation
						1118-2	1-3/C #16,600 V, EPR insulation
						2201-3	1-3/C #14,600 V, EPR insulation
						2201-2	1-2/C + gnd #8,600 V, EPR insulation
						2201-4	1-9/C #16,600 V, EPR insulation
2T29	E-212, E-21B (2)	610	152.4 mm siderail ladder tray	16623.79	18064.48	2123-3	1-3/C + gnd #2/0,600 V, EPR insulation
						Pull rope	Soft-Fiber Polyester
						2119-A	1-3/C + gnd 250 kcmil,600 V, EPR insulation
						2121	1-3/C + gnd #1/0,600 V, EPR insulation
						A-3004-1	1-3/C + gnd #2,600 V, EPR insulation
						A-3003-1	1-3/C + gnd #4,600 V, EPR insulation
						A-2012-1	1-3/C + gnd #2,600 V, EPR insulation
						2123	1-3/C + gnd #2,600 V, EPR insulation
						2105	1-3/C + gnd #2,600 V, EPR insulation
						2104	1-3/C + gnd #2,600 V, EPR insulation
						2125	1-3/C + gnd 250 kcmil,600 V, EPR insulation
						2123-2	1-3/C + gnd #2/0,600 V, EPR insulation
						2106	1-3/C + gnd #2,600 V, EPR insulation
						1118	1-3/C + gnd #2/0,600 V, EPR insulation
						2095	1-3/C + gnd #2,600 V, EPR insulation
						2096	1-3/C + gnd #2,600 V, EPR insulation
						2097	1-3/C + gnd #2,600 V, EPR insulation
						2098	1-3/C + gnd #2,600 V, EPR insulation
						2099	1-3/C + gnd #2,600 V, EPR insulation
						2103	1-3/C + gnd #2,600 V, EPR insulation
						2107	1-3/C + gnd #2,600 V, EPR insulation
						A-3041-1	1-3/C + gnd #2,600 V, EPR insulation
						S-3053-1	1-3/C + gnd #2,600 V, EPR insulation
						S-3052-1	1-3/C + gnd #2,600 V, EPR insulation
						2120	1-3/C + gnd #1/0,600 V, EPR insulation
						A-2013-1	1-3/C + gnd #2,600 V, EPR insulation
2T33	~~E-181~~ Thru E-186, E-212A (2)	760	152.4 mm siderail ladder tray	18689.05	22580.60	A-2011-1	1-3/C + gnd #2,600 V, EPR insulation
						UP208-4	1-2/C + gnd #8,600 V, EPR insulation
						UP208-6	1-2/C + gnd #8,600 V, EPR insulation
						Pull rope	Soft-Fiber Polyester
						LP219-2,4	1-3/C + gnd #6,600 V, EPR insulation
						LP219-6,8	1-3/C + gnd #6,600 V, EPR insulation
						LP220-2,4	1-3/C + gnd #6,600 V, EPR insulation
						LP220-6,8	1-3/C + gnd #6,600 V, EPR insulation
						LP221-2,4	1-3/C + gnd #6,600 V, EPR insulation
						UP205-6	1-2/C + gnd #8,600 V, EPR insulation
						A-3057-1	1-3/C + gnd #2,600 V, EPR insulation
						A-2014-1	1-3/C + gnd #2,600 V, EPR insulation
						UP204-8	1-2/C + gnd #8,600 V, EPR insulation
						UP205-8	1-2/C + gnd #8,600 V, EPR insulation
						UP207-8	1-2/C + gnd #8,600 V, EPR insulation
						UP205-1	1-2/C + gnd #10,600 V, EPR insulation
						UP207-7	1-2/C + gnd #8,600 V, EPR insulation
						A-3039-3	1-3/C + gnd #6,600 V, EPR insulation
						A-3040-3	1-3/C + gnd #6,600 V, EPR insulation
						A-3005-1	1-3/C + gnd #2,600 V, EPR insulation
						A-3006-1	1-3/C + gnd #4,600 V, EPR insulation
						A-3031-1	1-3/C + gnd #4,600 V, EPR insulation

CONDUIT DATA

Conduit No	Reference	Size	Type	Total Fill (mm²)	Allowable Fill (mm²)	Included Cable No.	Conductor Type
						A-3032-1	1-3/C + gnd #4,600 V, EPR insulation
						A-3039-1	1-3/C + gnd #2,600 V, EPR insulation
						A-3040-1	1-3/C + gnd #2,600 V, EPR insulation
						LP221-6,8	1-3/C + gnd #6,600 V, EPR insulation
						UP204-1	1-2/C + gnd #10,600 V, EPR insulation
						UP206-8	1-2/C + gnd #8,600 V, EPR insulation
						S-2032-1	1-3/C + gnd #4,600 V, EPR insulation
						A-3036-1	1-3/C + gnd #4,600 V, EPR insulation
						A-2035-1	1-3/C + gnd #6,600 V, EPR insulation
						A-2035-3	1-3/C + gnd #6,600 V, EPR insulation
						UP205-7	1-2/C + gnd #8,600 V, EPR insulation
						UP206-7	1-2/C + gnd #8,600 V, EPR insulation
						LP223-2,4	1-3/C + gnd #6,600 V, EPR insulation
						LP222-6,8	1-3/C + gnd #6,600 V, EPR insulation
						A-3035-1	1-3/C + gnd #4,600 V, EPR insulation
						A-3034-1	1-3/C + gnd #2,600 V, EPR insulation
						UP208-2	1-2/C + gnd #8,600 V, EPR insulation
						UP207-1	1-2/C + gnd #10,600 V, EPR insulation
						S-2031-1	1-3/C + gnd #2,600 V, EPR insulation
						UP206-1	1-2/C + gnd #10,600 V, EPR insulation
						1118-1	1-3/C #14,600 V, EPR insulation
						1118-2	1-3/C #16,600 V, EPR insulation
						1201-2	1-2/C + gnd #8,600 V, EPR insulation
						LP223-6,8	1-3/C + gnd #6,600 V, EPR insulation
						UP208-7	1-2/C + gnd #8,600 V, EPR insulation
						LP222-2,4	1-3/C + gnd #6,600 V, EPR insulation
						1201-6	1-2/C + gnd #8,600 V, EPR insulation
						A-3043-1	1-3/C + gnd #2,600 V, EPR insulation
						A-3042-1	1-3/C + gnd #2,600 V, EPR insulation
						2119-B	1-3/C + gnd 250 kcmil,600 V, EPR insulation
						A-3033-1	1-3/C + gnd #2,600 V, EPR insulation
						UP208-8	1-2/C + gnd #8,600 V, EPR insulation
2T39	E-212, E-21	610	152.4 mm siderail ladder tray	9889.17	18064.48	A-3032-1	1-3/C + gnd #4,600 V, EPR insulation
						2119-B	1-3/C + gnd 250 kcmil,600 V, EPR insulation
						A-2035-1	1-3/C + gnd #6,600 V, EPR insulation
						S-2032-1	1-3/C + gnd #4,600 V, EPR insulation
						S-2031-1	1-3/C + gnd #2,600 V, EPR insulation
						A-3036-1	1-3/C + gnd #4,600 V, EPR insulation
						A-3035-1	1-3/C + gnd #4,600 V, EPR insulation
						A-3034-1	1-3/C + gnd #2,600 V, EPR insulation
						A-3033-1	1-3/C + gnd #2,600 V, EPR insulation
						Pull rope	Soft-Fiber Polyester
						A-3039-1	1-3/C + gnd #2,600 V, EPR insulation
						A-3042-1	1-3/C + gnd #2,600 V, EPR insulation
						A-3031-1	1-3/C + gnd #4,600 V, EPR insulation
						A-3006-1	1-3/C + gnd #4,600 V, EPR insulation
						A-3005-1	1-3/C + gnd #2,600 V, EPR insulation
						A-2014-1	1-3/C + gnd #2,600 V, EPR insulation
						A-2011-1	1-3/C + gnd #2,600 V, EPR insulation
						A-3057-1	1-3/C + gnd #2,600 V, EPR insulation
						A-3043-1	1-3/C + gnd #2,600 V, EPR insulation
						A-3040-1	1-3/C + gnd #2,600 V, EPR insulation

For continuation, see next sheet.

CONDUIT AND TRAY SCHEDULE

E-419

STATE OF CALIFORNIA - DEPARTMENT OF TRANSPORTATION
Caltrans

DESIGN OVERSIGHT
BEHZAD GOLEMOHAMMADI

CALCULATED/DESIGNED BY PBP
CHECKED BY AB
DATE 8/02
REVISED BY
DATE REVISED

LAST REVISION 00-00-00
DATE PLOTTED => 7/11/2008
TIME PLOTTED => 3:06:22 PM

FOR REDUCED PLANS ORIGINAL SCALE IS IN MILLIMETERS 0 20 40 60 80

DGN FILE =>T:\13103\MS\pse\SAS Struc\CCO\SAS CCO42S1\CCO 42S1 Final Submittal 2008-07-11\04-0120f1_0374R02.dgn
USERNAME =>llorico

CU 04251 | EA 0120F1

DIST	COUNTY	ROUTE	KILOMETER POST TOTAL PROJECT	SHEET No	TOTAL SHEETS
04	SF	80	13.2/13.9	375 R2	1204

Jens Erlingsson 12/19/02
REGISTERED ELECTRICAL ENGINEER DATE

12-6-04
PLANS APPROVAL DATE

REGISTERED PROFESSIONAL ENGINEER JENS ERLINGSSON No. 8249 Exp. 9/30/06 ELECTRICAL STATE OF CALIFORNIA

PB POWER, Inc.
A Parsons Brinckerhoff Company
303 Second St., Suite 700N
San Francisco, CA 94107-1317

The State of California or its officers or agents shall not be responsible for the accuracy or completeness of electronic copies of this plan sheet.

Caltrans now has a web site! To get to the web site, go to: http://www.dot.ca.gov

Caltrans Metric

REGISTERED PROFESSIONAL ENGINEER S. A. ESTOQUE, JR. No. E-10151 Exp. 12/31/2008 ELECTRICAL STATE OF CALIFORNIA

FOR REVISION ONLY

REQUEST FOR INFORMATION NOT ADDRESSED IN THIS CCO REMAIN IN FORCE

MARK	DATE	DESCRIPTIONS	BY	CH'D	CCO#
2	02/25/08	CABLE TRAY CHANGES	TW	RG	42S1
1	03/04/08	BARRIER MODIFICATIONS	JS BM	RG SE	44

REVISIONS

CONTRACT CHANGE ORDER NO._____
SHEET_____ OF_____

CONDUIT DATA

Conduit No	Reference	Size	Type	Total Fill (mm²)	Allowable Fill (mm²)	Included Cable No.	Conductor Type
2T43	E-181 Thru E-186 E-212A 2	610	152.4 mm siderail solid bottom tray 2	10169.05	38709.60	2900-152C	4 pair #22, shielded pairs, FEP insulation
						2900-292A	4 pair #22, shielded pairs, FEP insulation
						2900-272C	4 pair #22, shielded pairs, FEP insulation
						2900-272B	4 pair #22, shielded pairs, FEP insulation
						2900-272A	4 pair #22, shielded pairs, FEP insulation
						2900-192C	4 pair #22, shielded pairs, FEP insulation
						2900-192B	4 pair #22, shielded pairs, FEP insulation
						2900-192A	4 pair #22, shielded pairs, FEP insulation
						2900-172C	4 pair #22, shielded pairs, FEP insulation
						2900-172B	4 pair #22, shielded pairs, FEP insulation
						2900-172A	4 pair #22, shielded pairs, FEP insulation
						1473-6	50 pair #18, shielded pairs, IS/OS shield 600 V, XLPE insul., PVC jacket
						2900-162A	4 pair #22, shielded pairs, FEP insulation
						2900-332C	4 pair #22, shielded pairs, FEP insulation
						2900-152B	4 pair #22, shielded pairs, FEP insulation
						2900-152A	4 pair #22, shielded pairs, FEP insulation
						2900-142A	4 pair #22, shielded pairs, FEP insulation
						2910-8	4 pair #22, shielded pairs, 300 V, PE insulation
						2119-2	4 pair #22, shielded pairs, 300 V, PE insulation
						2475-3C	12 Fiber, single mode fiberoptic cable
						MVDSE03A	MVDS DLC
						MVDSE01A	MVDS DLC
						MVDSE02A	MVDS DLC
						2149	1 - 2 pair, shielded #18 with IS/OA, 300 V, PVC jacket
						2154	1 - 2 pair, shielded #18 with IS/OA, 300 V, PVC jacket
						2900-162B	4 pair #22, shielded pairs, FEP insulation
						2900-442A	4 pair #22, shielded pairs, FEP insulation
						2474-10	50 pair #18, shielded pairs, IS/OS shield 600 V, XLPE insul., PVC jacket
						1474-6	50 pair #18, shielded pairs, IS/OS shield 600 V, XLPE insul., PVC jacket
						1473-4	50 pair #18, shielded pairs, IS/OS shield 600 V, XLPE insul., PVC jacket
						2910-7	4 pair #24, overall shielded, 300V, PE insulation
						2910-3	4 pair #22, shielded pairs, FEP insulation
						2910-2	4 pair #22, shielded pairs, FEP insulation
						2910-12	4 pair #22, shielded pairs, 300 V, PE insulation
						2910-11	1-3/C #16,600 V, EPR insulation
						2900-482A	4 pair #22, shielded pairs, FEP insulation
						2900-452B	4 pair #22, shielded pairs, FEP insulation
						2900-452A	4 pair #22, shielded pairs, FEP insulation
						2900-332A	4 pair #22, shielded pairs, FEP insulation
						2900-442B	4 pair #22, shielded pairs, FEP insulation
						2900-332B	4 pair #22, shielded pairs, FEP insulation
						2900-432A	4 pair #22, shielded pairs, FEP insulation
						2900-422B	4 pair #22, shielded pairs, FEP insulation
						2900-422A	4 pair #22, shielded pairs, FEP insulation
						2900-412C	4 pair #22, shielded pairs, FEP insulation
						2900-412B	4 pair #22, shielded pairs, FEP insulation
						2900-412A	4 pair #22, shielded pairs, FEP insulation
						2900-402A	4 pair #22, shielded pairs, FEP insulation
						2900-382C	4 pair #22, shielded pairs, FEP insulation
						2900-382B	4 pair #22, shielded pairs, FEP insulation
						2900-382A	4 pair #22, shielded pairs, FEP insulation
						2148	1 - 2 pair, shielded #18 with IS/OA, 300 V, PVC jacket
						2900-442C	4 pair #22, shielded pairs, FEP insulation
						CCTVE01AD	TVL
						1473-8	50 pair #18, shielded pairs, IS/OS shield 600 V, XLPE insul., PVC jacket
						Pull rope	Soft-Fiber Polyester
						2475-3A	12 Fiber, single mode fiberoptic cable
						2475-3B	12 Fiber, single mode fiberoptic cable
						2475-3	72 Fiber, single mode fiberoptic riser cable
						CCTVE01BC	TVC
						CCTVE01BD	TVL
						CCTVE01AC	TVC
						2900-432B	4 pair #22, shielded pairs, FEP insulation
						2155	1 - 2 pair, shielded #18 with IS/OA, 300 V, PVC jacket

CONDUIT DATA

Conduit No	Reference	Size	Type	Total Fill (mm²)	Allowable Fill (mm²)	Included Cable No.	Conductor Type
						MVDSW03A	MVDS DLC
2T44	E-115, E-182	610	152.4 mm siderail solid bottom tray 2	5109.21	38709.60	2119-2	4 pair #22, shielded pairs, 300 V, PE insulation
						1473-4	50 pair #18, shielded pairs, IS/OS shield 600 V, XLPE insul., PVC jacket
						1474-5	50 pair #18, shielded pairs, IS/OS shield 600 V, XLPE insul., PVC jacket
						1474-4	50 pair #18, shielded pairs, IS/OS shield 600 V, XLPE insul., PVC jacket
						Pull rope	Soft-Fiber Polyester
						MVDSE01A	MVDS DLC
						2475-3A	12 Fiber, single mode fiberoptic cable
						1473-5	50 pair #18, shielded pairs, IS/OS shield 600 V, XLPE insul., PVC jacket
2T45	E-115, E-182	610	152.4 mm siderail solid bottom tray 2	7529.12	38709.60	2900-432B	4 pair #22, shielded pairs, FEP insulation
						2910-12	4 pair #22, shielded pairs, 300 V, PE insulation
						Pull rope	Soft-Fiber Polyester
						2900-412A	4 pair #22, shielded pairs, FEP insulation
						2910-11	1-3/C #16,600 V, EPR insulation
						2910-7	4 pair #24, overall shielded, 30V, PE insulation
						2910-10	4 pair #22, shielded pairs, 300 V, PE insulation
						2910-8	4 pair #22, shielded pairs, 300 V, PE insulation
						2900-422B	4 pair #22, shielded pairs, FEP insulation
						2900-422A	4 pair #22, shielded pairs, FEP insulation
						2900-412C	4 pair #22, shielded pairs, FEP insulation
						2900-412B	4 pair #22, shielded pairs, FEP insulation
						2900-382C	4 pair #22, shielded pairs, FEP insulation
						2900-402A	4 pair #22, shielded pairs, FEP insulation
						2900-272C	4 pair #22, shielded pairs, FEP insulation
						2900-382B	4 pair #22, shielded pairs, FEP insulation
						2900-382A	4 pair #22, shielded pairs, FEP insulation
						2900-332C	4 pair #22, shielded pairs, FEP insulation
						2900-332B	4 pair #22, shielded pairs, FEP insulation
						2900-332A	4 pair #22, shielded pairs, FEP insulation
						2900-292A	4 pair #22, shielded pairs, FEP insulation
						2900-172A	4 pair #22, shielded pairs, FEP insulation
						2900-192B	4 pair #22, shielded pairs, FEP insulation
						2900-142A	4 pair #22, shielded pairs, FEP insulation
						1474-5A	1 - 6 pair, shielded #18 with overall shield, 300 V, PVC jacket
						2910-3	4 pair #22, shielded pairs, FEP insulation
						2910-2	4 pair #22, shielded pairs, FEP insulation
						2900-482A	4 pair #22, shielded pairs, FEP insulation
						2900-452B	4 pair #22, shielded pairs, FEP insulation
						2155	1 - 2 pair, shielded #18 with IS/OA, 300 V, PVC jacket

For continuation, see next sheet

CONDUIT AND TRAY SCHEDULE

E-420

STATE OF CALIFORNIA - DEPARTMENT OF TRANSPORTATION
Caltrans

DESIGN OVERSIGHT
BEHZAD GOLEMOHAMMADI

CALCULATED/DESIGNED BY	PBP	DATE 8/02	REVISED BY
CHECKED BY	AB	8/02	DATE REVISED

LAST REVISION 00-00-00

DATE PLOTTED => 7/11/2008
TIME PLOTTED => 3:06:45 PM

FOR REDUCED PLANS ORIGINAL SCALE IS IN MILLIMETERS 0 20 40 60 80

DGN FILE =>T:\13103\MS\pse\SAS Struc\CCO\SAS CC04251\CCO 42S1 Final Submittal 2008-07-11\04-0120f1_0375R02.dgn
USERNAME =>llorico

CU 04251 | EA 0120F1

DIST	COUNTY	ROUTE	KILOMETER POST TOTAL PROJECT	SHEET No	TOTAL SHEETS
04	SF	80	13.2/13.9	376 R2	1204

REGISTERED ELECTRICAL ENGINEER 12/19/02 DATE

12-6-04
PLANS APPROVAL DATE

REGISTERED PROFESSIONAL ENGINEER JENS ERLINGSSON No. 8249 Exp. 9/30/06 ELECTRICAL STATE OF CALIFORNIA

PB POWER, Inc.
A Parsons Brinckerhoff Company
303 Second St., Suite 700N
San Francisco, CA 94107-1317

The State of California or its officers or agents shall not be responsible for the accuracy or completeness of electronic copies of this plan sheet.

Caltrans now has a web site! To get to the web site, go to http://www.dot.ca.gov

Caltrans Metric

REGISTERED PROFESSIONAL ENGINEER S. A. ESTOQUE, JR. No. E-10151 Exp. 12/31/2008 ELECTRICAL STATE OF CALIFORNIA

FOR REVISION ONLY

REQUEST FOR INFORMATION NOT ADDRESSED IN THIS CCO REMAIN IN FORCE

MARK	DATE	DESCRIPTIONS	BY	CH'D	CCO#
2	02/25/08	CABLE TRAY CHANGES	TW	RG	42S1
1	03/04/08	BARRIER MODIFICATIONS	JS BM	RG SE	44

REVISIONS

CONTRACT CHANGE ORDER NO._____
SHEET_____ OF_____

CONDUIT DATA

Conduit No	Reference	Size	Type	Total Fill (mm²)	Allowable Fill (mm²)	Included Cable No.	Conductor Type
						2900-452A	4 pair #22, shielded pairs, FEP insulation
						2900-442A	4 pair #22, shielded pairs, FEP insulation
						2900-442C	4 pair #22, shielded pairs, FEP insulation
						2900-442B	4 pair #22, shielded pairs, FEP insulation
						2900-272A	4 pair #22, shielded pairs, FEP insulation
						2900-162A	4 pair #22, shielded pairs, FEP insulation
						2900-192C	4 pair #22, shielded pairs, FEP insulation
						1474-5	50 pair #18, shielded pairs, IS/OS shield 600 V, XLPE insul., PVC jacket
						2900-432A	4 pair #22, shielded pairs, FEP insulation
						2900-192A	4 pair #22, shielded pairs, FEP insulation
						2900-172C	4 pair #22, shielded pairs, FEP insulation
						2900-172B	4 pair #22, shielded pairs, FEP insulation
						2900-162B	4 pair #22, shielded pairs, FEP insulation
						2900-152C	4 pair #22, shielded pairs, FEP insulation
						2900-152B	4 pair #22, shielded pairs, FEP insulation
						2900-152A	4 pair #22, shielded pairs, FEP insulation
						1474-5B	1 - 6 pair, shielded #18 with overall shield, 300 V, PVC jacket
						1474-6	50 pair #18, shielded pairs, IS/OS shield 600 V, XLPE insul., PVC jacket
						1473-5	50 pair #18, shielded pairs, IS/OS shield 600 V, XLPE insul., PVC jacket
						1473-6	50 pair #18, shielded pairs, IS/OS shield 600 V, XLPE insul., PVC jacket
						2900-272B	4 pair #22, shielded pairs, FEP insulation
2T46	E-115, E-183	610	152.4 mm siderail solid bottom tray 2	5485.55	38709.60	1474-6	50 pair #18, shielded pairs, IS/OS shield 600 V, XLPE insul., PVC jacket
						Pull rope	Soft-Fiber Polyester
						MVDSE02A	MVDS DLC
						CCTVE01AD	TVL
						CCTVE01AC	TVC
						MVDSW03A	MVDS DLC
						CCTVE01BD	TVL
						CCTVE01BC	TVC
						1473-7	50 pair #18, shielded pairs, IS/OS shield 600 V, XLPE insul., PVC jacket
						1474-7	50 pair #18, shielded pairs, IS/OS shield 600 V, XLPE insul., PVC jacket
						1473-6	50 pair #18, shielded pairs, IS/OS shield 600 V, XLPE insul., PVC jacket
						2475-3B	12 Fiber, single mode fiberoptic cable
2T47	E-117, E-184	610	152.4 mm siderail solid bottom tray 2	4987.47	38709.60	1474-7	50 pair #18, shielded pairs, IS/OS shield 600 V, XLPE insul., PVC jacket
						MVDSE03A	MVDS DLC
						2475-3C	12 Fiber, single mode fiberoptic cable
						1473-8	50 pair #18, shielded pairs, IS/OS shield 600 V, XLPE insul., PVC jacket
						1473-7	50 pair #18, shielded pairs, IS/OS shield 600 V, XLPE insul., PVC jacket
						1474-8	50 pair #18, shielded pairs, IS/OS shield 600 V, XLPE insul., PVC jacket
						Pull rope	Soft-Fiber Polyester
2T48	E-118, E-185	610	152.4 mm siderail solid bottom tray 2	6718.75	38709.60	Pull rope	Soft-Fiber Polyester
						1474-10	50 pair #18, shielded pairs, IS/OS shield 600 V, XLPE insul., PVC jacket
						1474-8A	1 - 6 pair, shielded #18 with overall shield, 300 V, PVC jacket
						1474-8B	1 - 6 pair, shielded #18 with overall shield, 300 V, PVC jacket
						1474-8	50 pair #18, shielded pairs, IS/OS shield 600 V, XLPE insul., PVC jacket
						2154	1 - 2 pair, shielded #18 with IS/OA, 300 V, PVC jacket
						2148	1 - 2 pair, shielded #18 with IS/OA, 300 V, PVC jacket
						2149	1 - 2 pair, shielded #18 with IS/OA, 300 V, PVC jacket
						1473-10	50 pair #18, shielded pairs, IS/OS shield 600 V, XLPE insul., PVC jacket
						1473-8	50 pair #18, shielded pairs, IS/OS shield 600 V, XLPE insul., PVC jacket
						2474-10	50 pair #18, shielded pairs, IS/OS shield 600 V, XLPE insul., PVC jacket
						2150	1 - 2 pair, shielded #18 with IS/OA, 300 V, PVC jacket

CONDUIT DATA

Conduit No	Reference	Size	Type	Total Fill (mm²)	Allowable Fill (mm²)	Included Cable No.	Conductor Type
2T49	E-212, E-21B 2	305	152.4 mm siderail ladder tray	1904.72	19354.80	Pull rope	Soft-Fiber Polyester
						2900-152A	4 pair #22, shielded pairs, FEP insulation
						2900-152C	4 pair #22, shielded pairs, FEP insulation
						2900-162A	4 pair #22, shielded pairs, FEP insulation
						2900-162B	4 pair #22, shielded pairs, FEP insulation
						2910-2	4 pair #22, shielded pairs, FEP insulation
						2910-3	4 pair #22, shielded pairs, FEP insulation
						1473-4	50 pair #18, shielded pairs, IS/OS shield 600 V, XLPE insul., PVC jacket
						2475-3	72 Fiber, single mode fiberoptic riser cable
						2900-152B	4 pair #22, shielded pairs, FEP insulation
						2900-142A	4 pair #22, shielded pairs, FEP insulation
2T53	E-181 Thru E-186, E-212A	610	152.4 mm siderail solid bottom tray 2	0.00	38709.60	Pull rope	Soft-Fiber Polyester
2T54	E-212, E-21B 2	610	152.4 mm siderail ladder tray	0.00	16774.16	Pull rope	Soft-Fiber Polyester
3000		41	RGS conduit	323.69	534.55	UP204-8-2	2 + 1gnd #8,#10, 600 V, RHH/RHW insulation
						UP204-7-1	1-2/C + gnd #8,600 V, EPR insulation
3001		41	RGS conduit	454.92	534.55	UP204-7	1-2/C + gnd #8,600 V, EPR insulation
						UP204-8	1-2/C + gnd #8,600 V, EPR insulation
3002		53	RGS conduit	684.34	879.42	UP204-7	1-2/C + gnd #8,600 V, EPR insulation
						UP205-7-1	1-2/C + gnd #8,600 V, EPR insulation
						UP204-8-2	2 + 1gnd #8,#10, 600 V, RHH/RHW insulation
						UP204-8-1	3 + 1gnd #8,#10, 600 V, RHH/RHW insulation
3003		41	RGS conduit	454.92	534.55	UP205-8	1-2/C + gnd #8,600 V, EPR insulation
						UP205-7	1-2/C + gnd #8,600 V, EPR insulation
3004		53	RGS conduit	684.34	879.42	UP205-8-2	2 + 1gnd #8,#10, 600 V, RHH/RHW insulation
						UP205-8-1	3 + 1gnd #8,#10, 600 V, RHH/RHW insulation
						UP206-7-1	1-2/C + gnd #8,600 V, EPR insulation
						UP205-7	1-2/C + gnd #8,600 V, EPR insulation
3005		41	RGS conduit	454.92	534.55	UP206-8	1-2/C + gnd #8,600 V, EPR insulation
						UP206-7	1-2/C + gnd #8,600 V, EPR insulation
3006		53	RGS conduit	684.34	879.42	UP206-7	1-2/C + gnd #8,600 V, EPR insulation
						UP207-7-1	1-2/C + gnd #8,600 V, EPR insulation
						UP206-8-1	3 + 1gnd #8,#10, 600 V, RHH/RHW insulation
						UP206-8-2	2 + 1gnd #8,#10, 600 V, RHH/RHW insulation
3007		41	RGS conduit	454.92	534.55	UP207-8	1-2/C + gnd #8,600 V, EPR insulation
						UP207-7	1-2/C + gnd #8,600 V, EPR insulation
3008		53	RGS conduit	684.34	879.42	UP207-8-2	2 + 1gnd #8,#10, 600 V, RHH/RHW insulation
						UP207-8-1	3 + 1gnd #8,#10, 600 V, RHH/RHW insulation
						UP207-7	1-2/C + gnd #8,600 V, EPR insulation
						UP208-7-1	1-2/C + gnd #8,600 V, EPR insulation
3009		41	RGS conduit	454.92	534.55	UP208-8	1-2/C + gnd #8,600 V, EPR insulation
						UP208-7	1-2/C + gnd #8,600 V, EPR insulation

For continuation, see next sheet.

CONDUIT AND TRAY SCHEDULE

E-421

ALL DIMENSIONS ARE IN MILLIMETERS UNLESS OTHERWISE SHOWN

STATE OF CALIFORNIA - DEPARTMENT OF TRANSPORTATION
Caltrans

DESIGN OVERSIGHT: BEHZAD GOLEMOHAMMADI

CALCULATED/DESIGNED BY: PBP | DATE 8/02 | REVISED BY
CHECKED BY: AB | 8/02 | DATE REVISED

LAST REVISION 00-00-00

DATE PLOTTED => 7/11/2008
TIME PLOTTED => 3:07:08 PM

FOR REDUCED PLANS ORIGINAL SCALE IS IN MILLIMETERS 0 20 40 60 80

DGN FILE =>T:\13103\MS\pse\SAS Struc\CCO\SAS CC042S1\CCO 42S1 Final Submittal 2008-07-11\04-0120F1_0376R02.dgn
USERNAME =>llorico

CU 04251 | EA 0120F1

CONDUIT DATA

Conduit No	Reference	Size	Type	Total Fill (mm2)	Allowable Fill (mm2)	Included Cable No.	Conductor Type
2T54A	E-21,E-21E	610	152.4 mm siderail solid bottom tray	0.00	16774.16	Pull rope	Soft-Fiber Polyester
2T54B	E-21,E-21E	610	152.4 mm siderail ladder tray	0.00	16774.16	Pull rope	Soft-Fiber Polyester
2T29A	E-21,E-21E	610	152.4 mm siderail ladder tray	0.00	16774.16		
2T29B	E-21,E-21E	610	152.4 mm siderail ladder tray	0.00	16774.16		
2T39A	E-21,E-21E	610	152.4 mm siderail ladder tray	0.00	16774.16		
2T39B	E-21,E-21E	610	152.4 mm siderail ladder tray	0.00	16774.16		
2T41	E182,E207C,E264	305	152.4 mm siderail solid bottom tray	0.00	8387.08		
2T43A	E-212A	305	152.4 mm siderail solid bottom tray	0.00	8387.08		
2T43B	E-212A	305	152.4 mm siderail solid bottom tray	0.00	8387.08		
2T49A	E-21,E-21E	610	152.4 mm siderail solid bottom tray	0.00	16774.16		
2T49B	E-21,E-21E	610	152.4 mm siderail ladder tray	0.00	16774.16		

DIST	COUNTY	ROUTE	KILOMETER POST TOTAL PROJECT	SHEET No	TOTAL SHEETS
04	SF	80	13.2/13.9	376 S1	1204

REGISTERED ELECTRICAL ENGINEER 2/22/08 DATE

PLANS APPROVAL DATE

REGISTERED PROFESSIONAL ENGINEER S. A. ESTOQUE, JR. No. E-10151 Exp. 12/31/2008 ELECTRICAL STATE OF CALIFORNIA

PB AMERICAS, Inc.
A Parsons Brinckerhoff Company
303 Second St., Suite 700N
San Francisco, CA 94107-1317

The State of California or its officers or agents shall not be responsible for the accuracy or completeness of electronic copies of this plan sheet.

Caltrans now has a web site! To get to the web site, go to http://www.dot.ca.gov

REQUEST FOR INFORMATION NOT ADDRESSED IN THIS CCO REMAIN IN FORCE

MARK	DATE	DESCRIPTIONS	BY	CH'D	CCO#
0	02/25/08	CABLE TRAY CHANGES	RR TW	RG	42S1

REVISIONS

CONTRACT CHANGE ORDER NO._____
SHEET_____ OF _____

CONDUIT DATA

Conduit No	Reference	Size	Type	Total Fill (mm2)	Allowable Fill (mm2)	Included Cable No.	Conductor Type

For continuation, see next sheet.

CONDUIT AND TRAY SCHEDULE

E-421A

DATE REVISED BY | DATE REVISED
CALCULATED/DESIGNED BY | CHECKED BY
DESIGN OVERSIGHT: BEHZAD GOLEMOHAMMADI

STATE OF CALIFORNIA - DEPARTMENT OF TRANSPORTATION
Caltrans

LAST REVISION 00-00-00 | DATE PLOTTED => 7/11/2008 | TIME PLOTTED => 3:07:24 PM

FOR REDUCED PLANS ORIGINAL SCALE IS IN MILLIMETERS 0 20 40 60 80

DGN FILE =>T:\13103\MS\pse\SAS Struc\CCO\SAS CCO42S1\CCO 42S1 Final Submittal 2008-07-11\04-0120f1_0376S01.dgn
USERNAME =>llorico

CU 04251 | EA 0120F1

DIST	COUNTY	ROUTE	KILOMETER POST TOTAL PROJECT	SHEET No	TOTAL SHEETS
04	SF	80	13.2/13.9	407 R2	1204

REGISTERED ELECTRICAL ENGINEER 12/19/02 DATE

12-6-04
PLANS APPROVAL DATE

REGISTERED PROFESSIONAL ENGINEER JENS ERLINGSSON No. 8249 Exp. 9/30/06 ELECTRICAL STATE OF CALIFORNIA

PB POWER, Inc.
A Parsons Brinckerhoff Company
303 Second St., Suite 700N
San Francisco, CA 94107-1317

The State of California or its officers or agents shall not be responsible for the accuracy or completeness of electronic copies of this plan sheet.

Caltrans now has a web site! To get to the web site, go to http://www.dot.ca.gov

Caltrans Metric

REGISTERED PROFESSIONAL ENGINEER S. A. ESTOQUE JR. No. E-10151 Exp. 12/31/2008 ELECTRICAL STATE OF CALIFORNIA

FOR REVISION ONLY

REQUEST FOR INFORMATION NOT ADDRESSED IN THIS CCO REMAIN IN FORCE

MARK	DATE	DESCRIPTIONS	BY	CH'D	CCO#
2	02/25/08	CABLE TRAY CHANGES	RG	SE	42S1
1	02/19/08	ELECTRICAL MODIFICATIONS	MP EL	RR	42

REVISIONS

CONTRACT CHANGE ORDER NO. _____
SHEET _____ OF _____

CONDUIT DATA

Conduit No	Reference	Size	Type	Total Fill (mm²)	Allowable Fill (mm²)	Included Cable No.	Conductor Type
3177A	E-264A	78	Liquidtight flex metal conduit	1853.73	1928.98	2119-B	3+1gnd, #250 kcmil, #1/0, 600V, EPR insulation
						2204-2	1-3/C #16, 600V, EPR Insulation
						1201-2	1-2/C + gnd #8, 600V, EPR Insulation
						A-3057-1	1-3/C + gnd #2, 600V, EPR Insulation
3177B	E-264A (2)	78	RGS - PVC coated conduit	1853.73	1935.24	2119-B	3+1gnd, #250 kcmil, #1/0, 600V, EPR insulation
						2204-2	1-3/C #16, 600V, EPR Insulation
						1201-2	1-2/C + gnd #8, 600V, EPR Insulation
						A-3057-1	1-3/C + gnd #2, 600V, EPR Insulation
3278A	E-264A	78	Liquidtight flex metal conduit	1827.85	1928.98	2123-2	1-3/C + gnd #2/0, 600V, EPR Insulation
						2123-3	1-3/C + gnd #2/0, 600V, EPR Insulation
						2910-11	1-3/C #16, 600V, EPR Insulation
3278B	E-264A (2)	78	RGS - PVC coated conduit	1827.85	1953.24	2123-2	1-3/C + gnd #2/0, 600V, EPR Insulation
						2123-3	1-3/C + gnd #2/0, 600V, EPR Insulation
						2910-11	1-3/C #16, 600V, EPR Insulation
3294A	E-264A	78	Liquidtight flex metal conduit		1928.98	Pull rope	Soft-fiber polyester
3294B	E-264A (2)	78	RGS - PVC coated conduit		1935.24	Pull rope	Soft-fiber polyester
3294C	E-287 (2)	41	RGS - PVC coated conduit	170.36	534.55	2120-1	1-3/C #14, 600V, EPR Insulation
						2120-2	1-3/C #14, 600V, EPR Insulation
3319A	E-264A	78	Liquidtight flex metal conduit	1849.08	1928.98	2121	1-3/C + gnd #1/0, 600V, EPR Insulation
						2121-1	1-3/C #14, 600V, EPR Insulation
						2120	1-3/C + gnd #1/0, 600V, EPR Insulation
						2121-2	1-3/C #14, 600V, EPR Insulation
						2120-1	1-3/C #14, 600V, EPR Insulation
						2120-2	1-3/C #14, 600V, EPR Insulation
3319B	E-264A (2)	78	RGS - PVC coated conduit	1849.08	1935.24	2121	1-3/C + gnd #1/0, 600V, EPR Insulation
						2121-1	1-3/C #14, 600V, EPR Insulation
						2120	1-3/C + gnd #1/0, 600V, EPR Insulation
						2121-2	1-3/C #14, 600V, EPR Insulation
						2120-1	1-3/C #14, 600V, EPR Insulation
						2120-2	1-3/C #14, 600V, EPR Insulation
3322A	E-264A	78	Liquidtight flex metal conduit	1853.73	1928.98	2119-A	3+1gnd, #250 kcmil, #1/0, 600V, EPR insulation
						2123	1-3/C + gnd #2, 600V, EPR Insulation
						1201-1	1-2/C + gnd #8, 600V, EPR Insulation
						2204-1	1-3/C #16, 600V, EPR Insulation
3322B	E-264A (2)	78	RGS - PVC coated conduit	1853.73	1935.24	2119-A	3+1gnd, #250 kcmil, #1/0, 600V, EPR insulation
						2123	1-3/C + gnd #2, 600V, EPR Insulation
						1201-1	1-2/C + gnd #8, 600V, EPR Insulation
						2204-1	1-3/C #16, 600V, EPR Insulation
3324B (2)	E-264A	78	RGS - PVC coated conduit	0.00	1935.24	Pull Rope	Soft Fiber Polyester
3330A	E-264A	78	Liquidtight flex metal conduit	552.33	1928.98	CCTVE01BA	TVP
						CCTVE01BB	TVCP
						CCTVE01AA	TVP
						CCTVE01AB	TVCP
						GND	1-#250 kcmil, bare copper
3330B	E-264A (2)	78	RGS - PVC coated conduit	552.33	1935.24	CCTVE01BA	TVP
						CCTVE01BB	TVCP
						CCTVE01AA	TVP
						CCTVE01AB	TVCP
						GND	1-#250 kcmil, bare copper
3339A	E-264A	78	Liquidtight flex metal conduit	1432.01	1928.98	2125	3+1gnd, #250 kcmil, #1/0, 600V, EPR insulation
						1201-6	1-2/C + gnd #8, 600V, EPR Insulation
						GND	1-#250 kcmil, bare copper

CONDUIT DATA

Conduit No	Reference	Size	Type	Total Fill (mm²)	Allowable Fill (mm²)	Included Cable No.	Conductor Type
3339B	E-264A (2)	78	RGS - PVC coated conduit	1432.01	1935.24	2125	3+1gnd, #250 kcmil, #1/0, 600V, EPR insulation
						1201-6	1-2/C + gnd #8, 600V, EPR Insulation
						GND	1-#250 kcmil, bare copper
3348A	E-264A	78	Liquidtight flex metal conduit		1928.98	Pull rope	Soft-fiber polyester
3348B	E-264A (2)	78	RGS - PVC coated conduit		1935.24	Pull rope	Soft-fiber polyester
3349A	E-264A	78	Liquidtight flex metal conduit		1928.98	Pull rope	Soft-fiber polyester
3349B	E-264A (2)	78	RGS - PVC coated conduit		1935.24	Pull rope	Soft-fiber polyester
3359A	E-264A	78	Liquidtight flex metal conduit	648.52	1928.98	CCTVE01AC	TVC
						CCTVE01AD	TVL
						MVDSE02A	MVDS DLC
						MVDSE03A	MVDS DLC
						CCTVE01BC	TVC
						CCTVE01BD	TVL
3359B	E-264A (2)	78	RGS - PVC coated conduit	648.52	1935.24	CCTVE01AC	TVC
						CCTVE01AD	TVL
						MVDSE02A	MVDS DLC
						MVDSE03A	MVDS DLC
						CCTVE01BC	TVC
						CCTVE01BD	TVL
8011A	E-264A	78	Liquidtight flex metal conduit		1928.98	Pull rope	Soft-fiber polyester
8011B	E-264A (2)	78	RGS - PVC coated conduit		1935.24	Pull rope	Soft-fiber polyester
9057A	E-264A	78	Liquidtight flex metal conduit	442.35	1928.98	2910-12	4 pair #22, shielded pairs, 300V, PE insulation
						2910-8	4 pair #22, shielded pairs, 300V, PE insulation
						2910-7	4 pair #24, overall shielded, 300V, PE insulation
						2119-2	4 pair #22, shielded pairs, 300V, PE insulation
9057B	E-264A (2)	78	RGS - PVC coated conduit	442.35	1935.24	2910-12	4 pair #22, shielded pairs, 300V, PE insulation
						2910-8	4 pair #22, shielded pairs, 300V, PE insulation
						2910-7	4 pair #24, overall shielded, 300V, PE insulation
						2119-2	4 pair #22, shielded pairs, 300V, PE insulation
9057C	E-264A, E-366	21	RGS - PVC coated conduit	62.07	187.69	2910-11	1-3/C #16, 600V, EPR Insulation

CONDUIT AND TRAY SCHEDULE

E-449C

DATE	REVISED BY	DATE REVISED
3/04	EJL	3/04 JE

CALCULATED/DESIGNED BY EJL
CHECKED BY JE

DESIGN OVERSIGHT
BEHZAD GOLEMOHAMMADI

STATE OF CALIFORNIA - DEPARTMENT OF TRANSPORTATION
Caltrans

LAST REVISION 00-00-00

DATE PLOTTED => 7/11/2008
TIME PLOTTED => 3:07:40 PM

FOR REDUCED PLANS ORIGINAL SCALE IS IN MILLIMETERS 0 20 40 60 80

DGN FILE =>T:\13103\MS\pse\SAS Struc\CCO\SAS CCO42S1\CCO 42S1 Final Submittal 2008-07-11\04-0120f1_0407R02.dgn
USERNAME =>llorico

CU 04251 | EA 0120F1

DIST.	COUNTY	ROUTE	KILOMETER POST TOTAL PROJECT	SHEET NO.	TOTAL SHEETS
04	SF	80	13.2/13.9	452R1	1204

REGISTERED ENGINEER - CIVIL

12-6-04
PLANS APPROVAL DATE

PROFESSIONAL ENGINEER — John A. Denis, No. C 26169, Exp. 03/31/05, CIVIL, STATE OF CALIFORNIA

The State of California or its officers or agents shall not be responsible for the accuracy or completeness of electronic copies of this plan sheet.

T.Y. LIN / MOFFATT & NICHOL
825 BATTERY STREET
SAN FRANCISCO, CA 94111

Caltrans now has a web site! To get to the web site, go to: http://www.dot.ca.gov

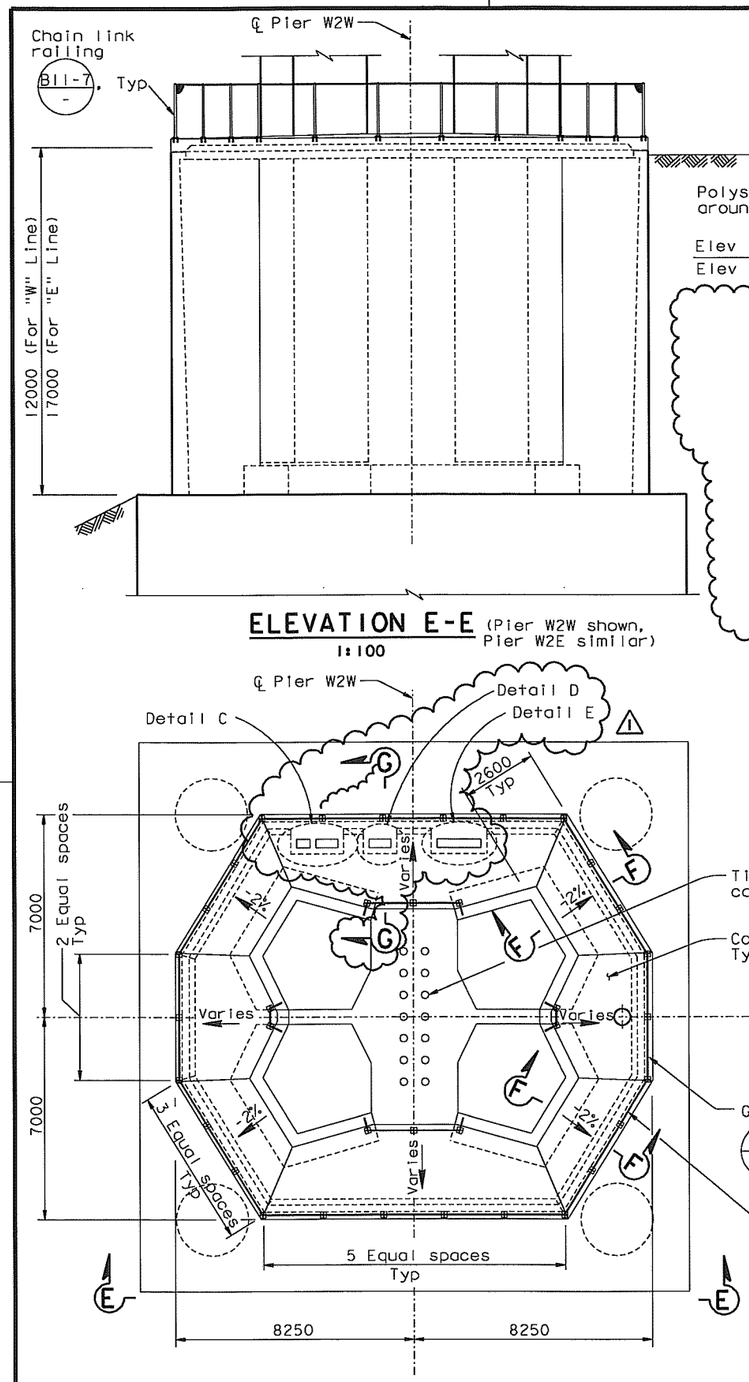

ELEVATION E-E (Pier W2W shown, Pier W2E similar)
1:100

PLAN
1:100

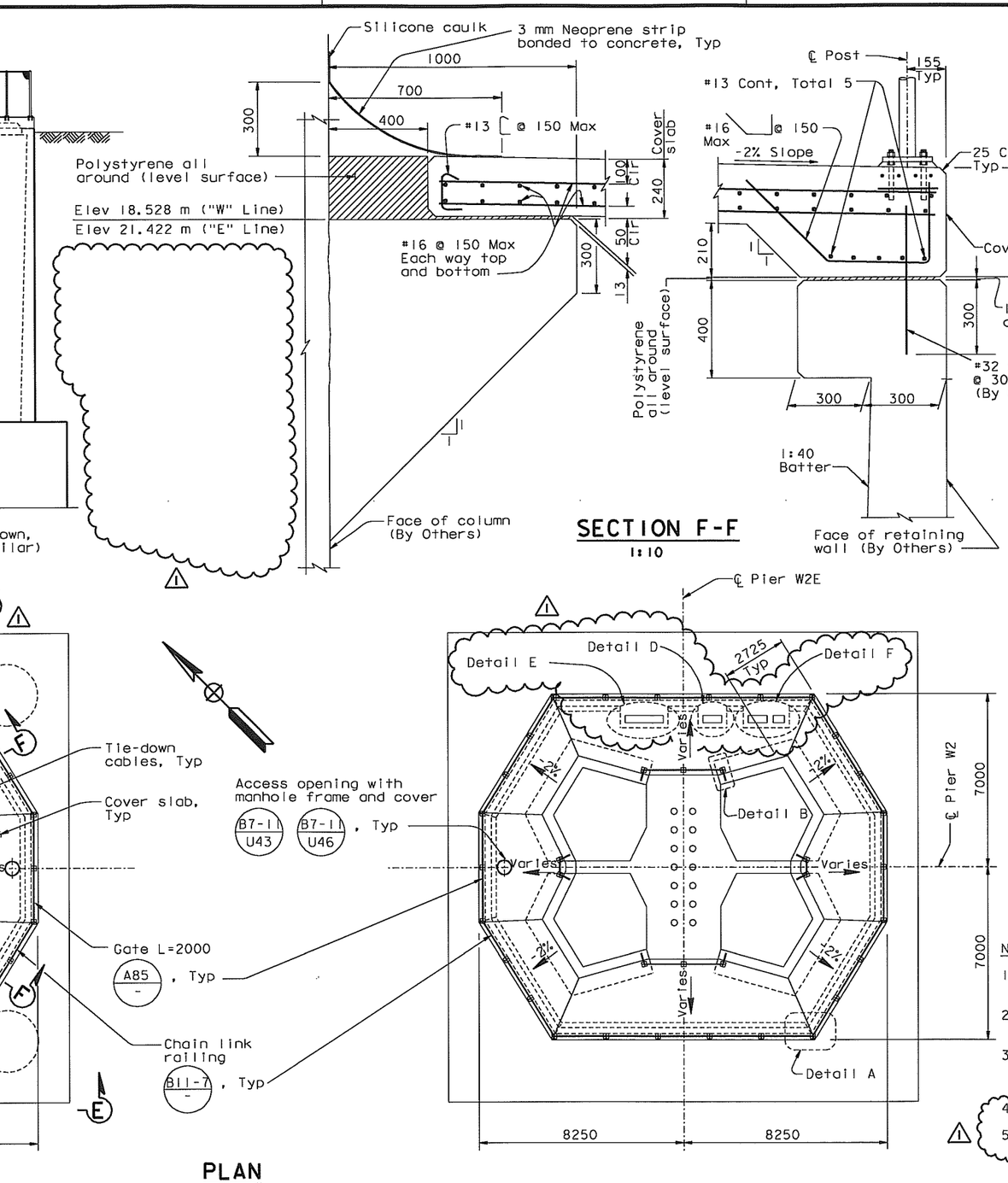

SECTION F-F
1:10

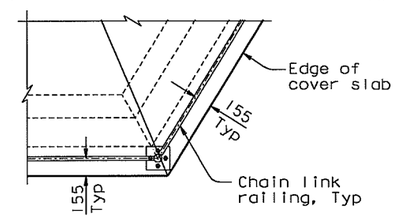

DETAIL A
1:25

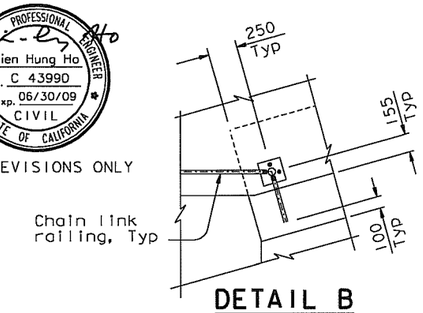

DETAIL B
1:25

PROFESSIONAL ENGINEER — Tien Hung Ho, No. C 43990, Exp. 06/30/09, CIVIL, STATE OF CALIFORNIA

FOR REVISIONS ONLY

MARK	DATE	DESCRIPTIONS	BY	CH'D	CCO#
1	01/09/08	CABLE TRAY CHANGES	TH	JD	42S1

REVISIONS

CONTRACT CHANGE ORDER NO. ____
SHEET ____ OF ____

NOTES:

1. For pier W2 access details, see "Pier W2 Access Details" sheet.
2. For utility cable trays, location of openings and embed strut channel, see "Road Plans".
3. Fill gap between cable tray and concrete with polystyrene, caulk all around, covered with 3 mm Neoprene strip (similar to that shown in Section F-F).
4. For Section G-G see "Pier W2 Details No.6A" sheet.
5. For Details C, D, E and F, see "Pier W2 Details No.6A" sheet.

ALL DIMENSIONS ARE IN MILLIMETERS UNLESS OTHERWISE SHOWN

R. Valizadeh/V. Toan/Y.L./W.L./F.C.
DESIGN OVERSIGHT
SIGN OFF DATE 01/09/08

DESIGN	BY J. Denis	CHECKED J. Leventini	
DETAILS	BY K. Tam	CHECKED J. Leventini	
QUANTITIES	BY J. Denis	CHECKED D. Harrison	

PREPARED FOR THE STATE OF CALIFORNIA DEPARTMENT OF TRANSPORTATION

R. Manzanarez
PROJECT ENGINEER

BRIDGE NO. 34-0006L/R
KILOMETER POST 13.2/13.9

SAN FRANCISCO OAKLAND BAY BRIDGE
EAST SPAN SEISMIC SAFETY PROJECT
SELF-ANCHORED SUSPENSION BRIDGE (SUPERSTRUCTURE & TOWER)

PIER W2 DETAILS NO. 6

Rev. Date: 5-18-98

ORIGINAL SCALE IN MILLIMETERS FOR REDUCED PLANS 0 10 20 30 40 50 60 70 80 90 100

CU 04
EA 0120F1

DISREGARD PRINTS BEARING EARLIER REVISION DATES

REVISION DATES (PRELIMINARY STAGE ONLY) 05/18/99 08/02/99 05/14/01 04/09/02 07/01/02 08/07/02 12/13/02 05/16/03 10/12/04

SHEET 35R1 OF

FILE => I:\bb\04-01200i\sas\contract plans and cco\cco\in progress\cco#42s1\dgn\aeplr04-r1.dgn

USERNAME => ptom DATE PLOTTED => 09 JAN 2008 TIME PLOTTED => 14:27:07

100% PS&E

DIST.	COUNTY	ROUTE	KILOMETER POST TOTAL PROJECT	SHEET NO.	TOTAL SHEETS
04	SF	80	13.2/13.9	452S1	1204

Caltrans Metric

REGISTERED ENGINEER - CIVIL

01-09-08
PLANS APPROVAL DATE

REGISTERED PROFESSIONAL ENGINEER Tien Hung Ho No. C 43990 Exp. 06/30/09 CIVIL STATE OF CALIFORNIA

The State of California or its officers or agents shall not be responsible for the accuracy or completeness of electronic copies of this plan sheet.

T.Y. LIN / MOFFATT & NICHOL
825 BATTERY STREET
SAN FRANCISCO, CA 94111

Caltrans now has a web site! To get to the web site, go to: http://www.dot.ca.gov

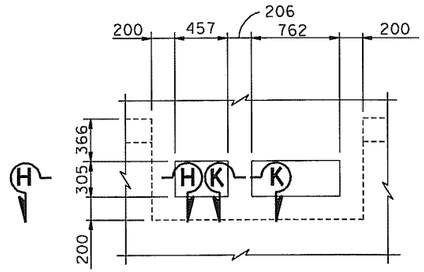

DETAIL C
1:25

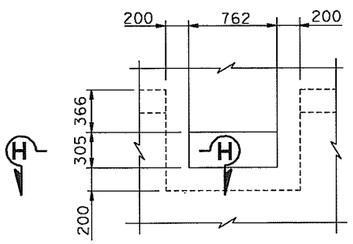

DETAIL D
1:25

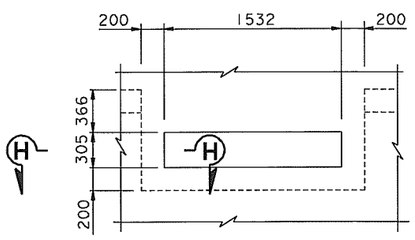

DETAIL E
1:25

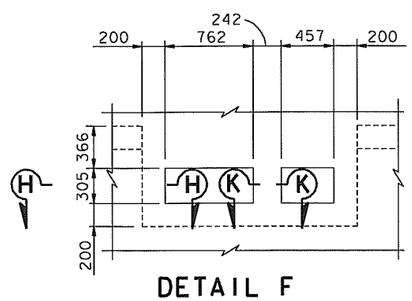

DETAIL F
1:25

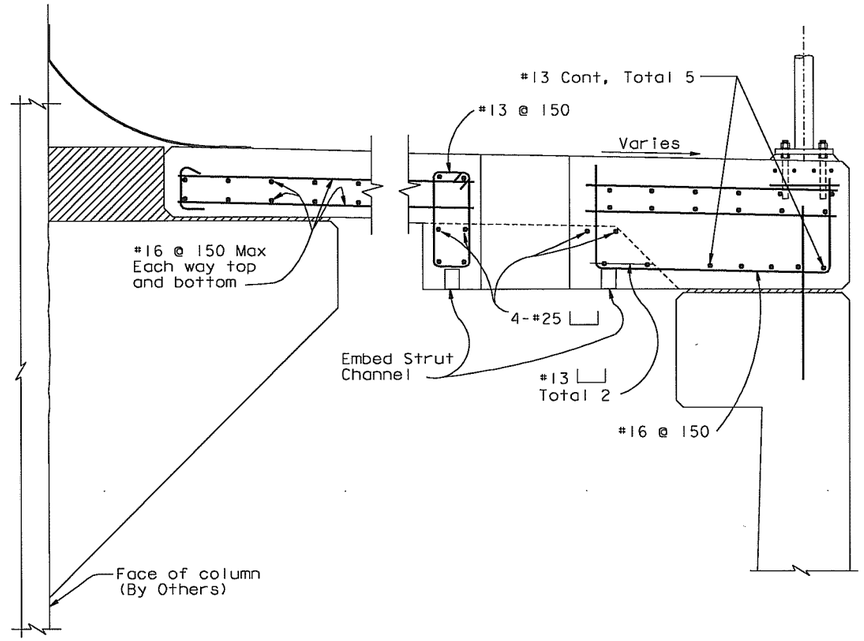

SECTION G-G
1:10

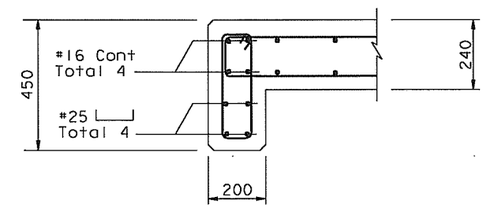

SECTION H-H
1:10

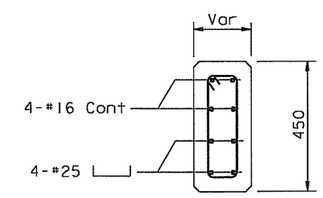

SECTION K-K
1:10

NOTES:

1. For utility cable trays, location of openings and embed strut channel, see "Road Plans".

MARK	DATE	DESCRIPTIONS	BY	CH'D	CCO#
0	01/09/08	CABLE TRAY CHANGES	TH	JD	42S1

REVISIONS

CONTRACT CHANGE ORDER NO. ____
SHEET ___ OF ___

ALL DIMENSIONS ARE IN MILLIMETERS UNLESS OTHERWISE SHOWN

R. Valizadeh/V. Toan/Y.L./W.L./F.C.
DESIGN OVERSIGHT
SIGN OFF DATE 01/09/08

	BY	CHECKED
DESIGN	T. Ho	J. Duxbury
DETAILS	T. Ho	J. Duxbury
QUANTITIES	T. Ho	J. Duxbury

PREPARED FOR THE STATE OF CALIFORNIA DEPARTMENT OF TRANSPORTATION

R. Manzanarez
PROJECT ENGINEER

BRIDGE NO. 34-0006L/R
KILOMETER POST 13.2/13.9

SAN FRANCISCO OAKLAND BAY BRIDGE
EAST SPAN SEISMIC SAFETY PROJECT
SELF-ANCHORED SUSPENSION BRIDGE
(SUPERSTRUCTURE & TOWER)

PIER W2 DETAILS NO. 6A

Rev. Date: 5-18-98

ORIGINAL SCALE IN MILLIMETERS FOR REDUCED PLANS 0 10 20 30 40 50 60 70 80 90 100

CU 04
EA 0120F1

DISREGARD PRINTS BEARING EARLIER REVISION DATES 01/09/08

REVISION DATES (PRELIMINARY STAGE ONLY)

SHEET 35S1 OF

FILE => I:\bb\04-0120F1\sas\contract plans and cco\cco\in progress\cco#42s1\dgn\aepir04s1.dgn

100 % PS&E

DATE PLOTTED => 09 JAN 2008 TIME PLOTTED => 14:24:32

USERNAME => ptom

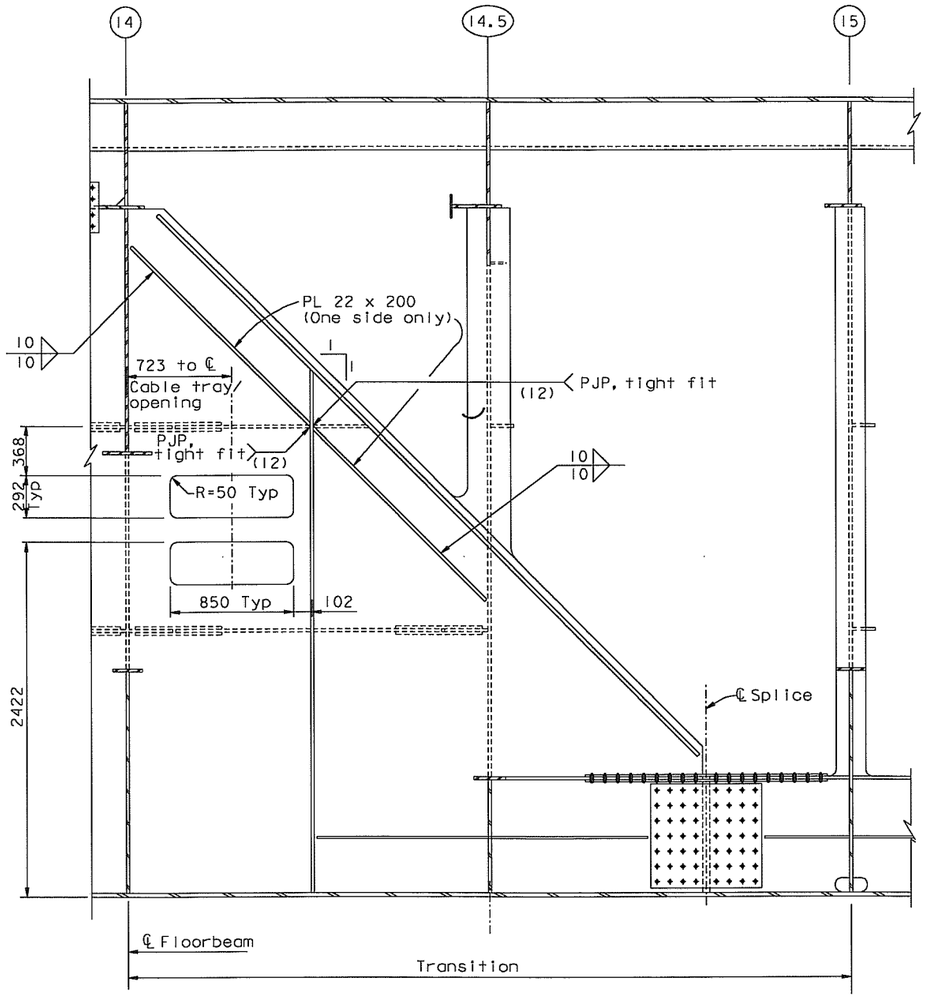

LONGITUDINAL SHEAR PLATE ELEVATION (PP14 to PP15)

1:20 (See Note 1)

DIST.	COUNTY	ROUTE	KILOMETER POST TOTAL PROJECT	SHEET NO.	TOTAL SHEETS
04	SF	80	13.2/13.9	631S1	1204

Daniel J. Turner
REGISTERED ENGINEER - CIVIL

01-09-08
PLANS APPROVAL DATE

REGISTERED PROFESSIONAL ENGINEER
Daniel J. Turner
No. C 65033
Exp. 06/30/09
CIVIL
STATE OF CALIFORNIA

The State of California or its officers or agents shall not be responsible for the accuracy or completeness of electronic copies of this plan sheet.

T.Y. LIN / MOFFATT & NICHOL
825 BATTERY STREET
SAN FRANCISCO, CA 94111

Caltrans now has a web site! To get to the web site, go to: http://www.dot.ca.gov

MARK	DATE	DESCRIPTIONS	BY	CH'D	CCO#
0	01/09/08	CABLE TRAY CHANGES	DT	GB	42S1

REVISIONS

CONTRACT CHANGE ORDER NO. _____
SHEET ____ OF ____

NOTES:

1. For Details not shown, see "Typical Girder Details No. 7" sheet.

100 % PS&E

ALL DIMENSIONS ARE IN MILLIMETERS UNLESS OTHERWISE SHOWN

SAN FRANCISCO OAKLAND BAY BRIDGE
EAST SPAN SEISMIC SAFETY PROJECT
SELF-ANCHORED SUSPENSION BRIDGE
(SUPERSTRUCTURE & TOWER)

TYPICAL GIRDER DETAILS NO. 7A

R. Vallizadeh/V. Toan/Y.L./W.L./F.C.
DESIGN OVERSIGHT
SIGN OFF DATE 01/09/08

	BY	CHECKED
DESIGN	D. Turner	G. Baker
DETAILS	D. Turner	G. Baker
QUANTITIES	D. Turner	G. Baker

PREPARED FOR THE STATE OF CALIFORNIA DEPARTMENT OF TRANSPORTATION

R. Manzanarez
PROJECT ENGINEER

BRIDGE NO. 34-0006L/R
KILOMETER POST 13.2/13.9

Rev. Date: 5-18-98

ORIGINAL SCALE IN MILLIMETERS FOR REDUCED PLANS 0 10 20 30 40 50 60 70 80 90 100

CU 04
EA 0120F1

DISREGARD PRINTS BEARING EARLIER REVISION DATES 01/09/08

REVISION DATES (PRELIMINARY STAGE ONLY)

SHEET 214S1 OF

FILE => I:\bb\04-01200I\sas\contract plans and cco\cco\in progress\cco#42s1\dgn\agdkd04a.dgn

USERNAME => ptom DATE PLOTTED => 09 JAN 2008 TIME PLOTTED => 14:26:10

MARK	DATE	DESCRIPTIONS	BY	CH'D	CCO#
1	01/09/08	CABLE TRAY CHANGES	GB	DT	4251

REVISIONS

CONTRACT CHANGE ORDER NO. ____
SHEET ____ OF ____

Daniel J. Turner
REGISTERED PROFESSIONAL ENGINEER
Daniel J. Turner
No. C 65033
Exp. 06/30/09
CIVIL
STATE OF CALIFORNIA
FOR REVISIONS ONLY

Caltrans Metric

DIST.	COUNTY	ROUTE	KILOMETER POST TOTAL PROJECT	SHEET NO.	TOTAL SHEETS
04	SF	80	13.2/13.9	706R1	1204

George Baker
REGISTERED ENGINEER - CIVIL
12-6-04
PLANS APPROVAL DATE
REGISTERED PROFESSIONAL ENGINEER
George S. Baker
No. C 57112
Exp. 12/31/05
CIVIL
STATE OF CALIFORNIA

The State of California or its officers or agents shall not be responsible for the accuracy or completeness of electronic copies of this plan sheet.

T.Y. LIN / MOFFATT & NICHOL
825 BATTERY STREET
SAN FRANCISCO, CA 94111

Caltrans now has a web site! To get to the web site, go to: http://www.dot.ca.gov

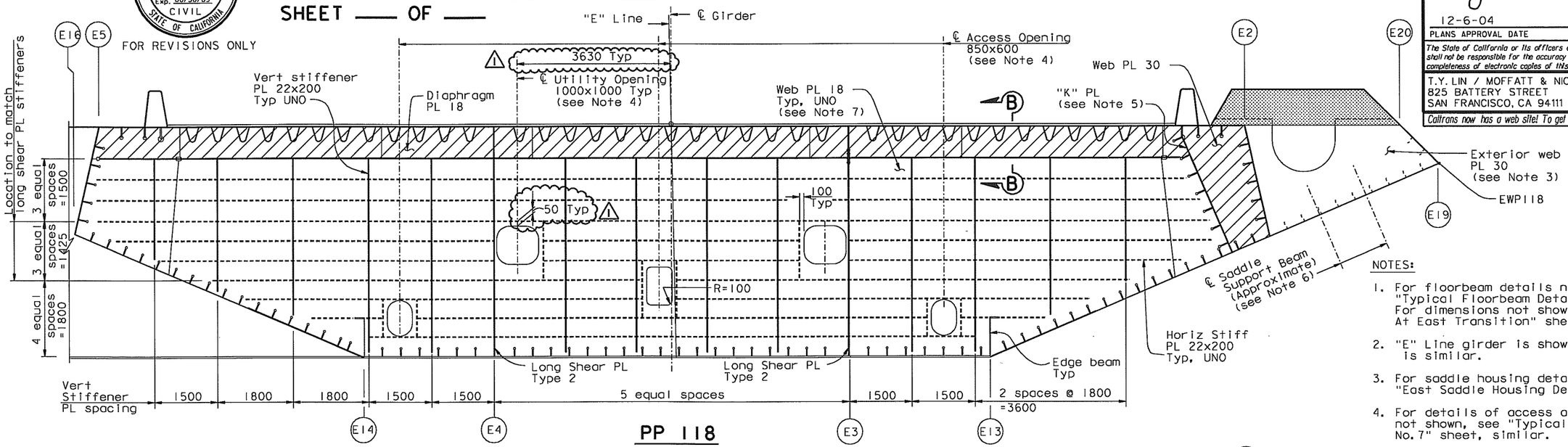

PP 118

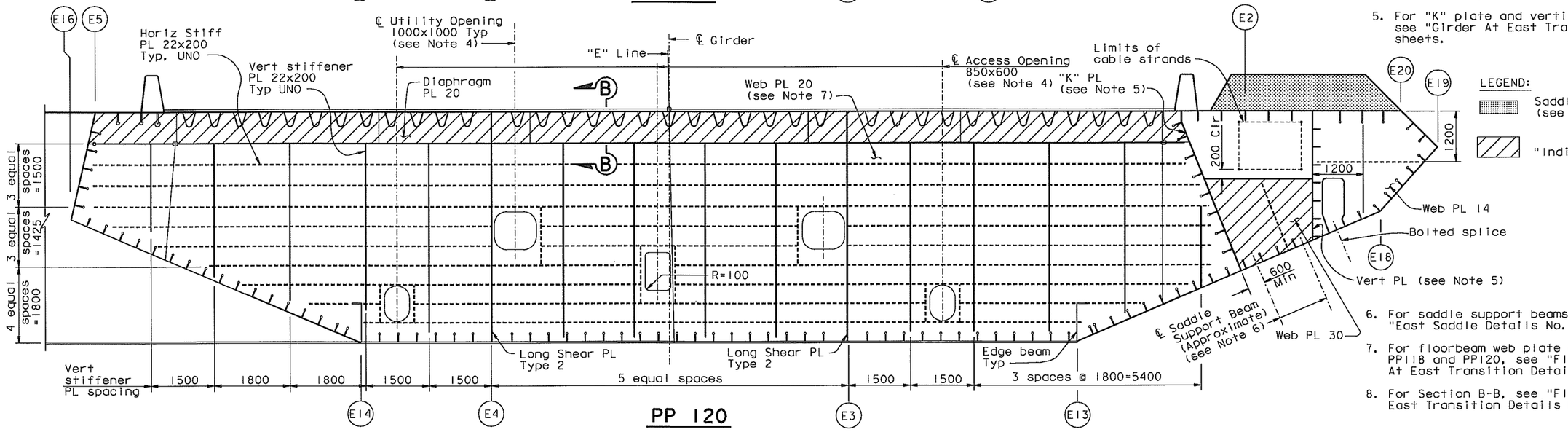

PP 120

"E" LINE SECTION (see Note 2)

1:50

NOTES:

1. For floorbeam details not shown, see "Typical Floorbeam Details No.1" sheet. For dimensions not shown, see "Girder At East Transition" sheets.
2. "E" Line girder is shown, "W" Line girder is similar.
3. For saddle housing details, see "East Saddle Housing Details" sheets.
4. For details of access and utility opening not shown, see "Typical Girder Details No.7" sheet, similar.
5. For "K" plate and vertical plate details, see "Girder At East Transition Details" sheets.
6. For saddle support beams details, see "East Saddle Details No.7" sheet.
7. For floorbeam web plate details at PP118 and PP120, see "Floorbeam At East Transition Details No.2" sheet.
8. For Section B-B, see "Floorbeam At East Transition Details No.1" sheet.

LEGEND:

Saddle Housing (see Note 3)

"Indicates SPCM web plate"

ALL DIMENSIONS ARE IN MILLIMETERS UNLESS OTHERWISE SHOWN

R. Valizadeh/V. Toan/Y.L./W.L./F.C.
DESIGN OVERSIGHT
SIGN OFF DATE 01/09/08

	BY	CHECKED
DESIGN	G. Baker	P. Ritchie
DETAILS	S. Camo	T. McMeans
QUANTITIES	C. Mauch	M. Roberts

PREPARED FOR THE STATE OF CALIFORNIA DEPARTMENT OF TRANSPORTATION

R. Manzanarez
PROJECT ENGINEER

CU 04
EA 0120F1

BRIDGE NO. 34-0006L/R
KILOMETER POST 13.2/13.9

SAN FRANCISCO OAKLAND BAY BRIDGE
EAST SPAN SEISMIC SAFETY PROJECT
SELF-ANCHORED SUSPENSION BRIDGE
(SUPERSTRUCTURE & TOWER)

FLOORBEAM AT EAST TRANSITION NO. 2

Rev. Date: 5-18-98

ORIGINAL SCALE IN MILLIMETERS FOR REDUCED PLANS 0 10 20 30 40 50 60 70 80 90 100

DISREGARD PRINTS BEARING EARLIER REVISION DATES 01/15/99 05/15/99 08/27/99 05/31/01 04/08/02 07/01/02 12/19/02

SHEET 289R1 OF

FILE => I:\bb\04-01200I\sas\contract plans and cco\cco\in progress\cco#4251\dgn\agefd02.dgn

100 % PS&E

USERNAME => ptom DATE PLOTTED => 09 JAN 2008 TIME PLOTTED => 09:36:20

DIST.	COUNTY	ROUTE	KILOMETER POST TOTAL PROJECT	SHEET NO.	TOTAL SHEETS
04	SF	80	13.2/13.9	964R1	1204

Caltrans Metric

George Baker
REGISTERED ENGINEER - CIVIL

1-27-03
PLANS APPROVAL DATE

REGISTERED PROFESSIONAL ENGINEER George S. Baker No. C57112 Exp. 12/31/05 CIVIL STATE OF CALIFORNIA

The State of California or its officers or agents shall not be responsible for the accuracy or completeness of electronic copies of this plan sheet.

T.Y. LIN / MOFFATT & NICHOL
825 BATTERY STREET
SAN FRANCISCO, CA 94111

To get to the web site, go to: http://www.dot.ca.gov

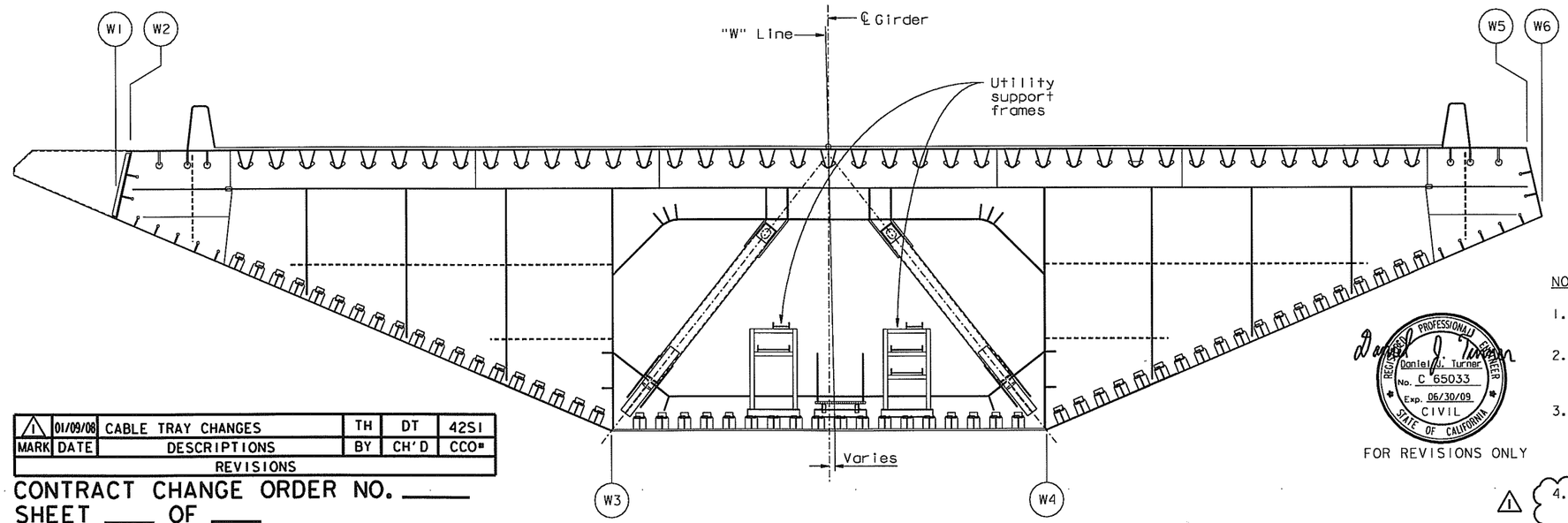

MARK	DATE	DESCRIPTIONS	BY	CH'D	CCO#
1	01/09/08	CABLE TRAY CHANGES	TH	DT	42S1
REVISIONS					

CONTRACT CHANGE ORDER NO. ____
SHEET ____ OF ____

TYPICAL SECTION ("W" LINE SHOWN, "E" LINE SIMILAR)

1:50

REGISTERED PROFESSIONAL ENGINEER Daniel J. Turner No. C 65033 Exp. 06/30/09 CIVIL STATE OF CALIFORNIA

FOR REVISIONS ONLY

NOTES:

1. For details of utility support frames, see "Road Plans" sheets.
2. For details of utility cable penetrations, see "Utility Details No. 1" sheet. For cable diameters and fittings, see "Road Plans" sheets.
3. For utility cable penetrations closer than 1 m c-c spacing doubler plates shall be used at all such cutouts. For details see "Duct Opening Detail" on "Dehumidification Support Details No. 5" sheet.
4. Minimum spacing shown may be reduced as approved by the Engineer.
5. For exact utility duct locations see "Typical Tray and Conduit Installation at Pier W2W" and "Typical Tray and Conduit Installation at Pier W2E" sheets.

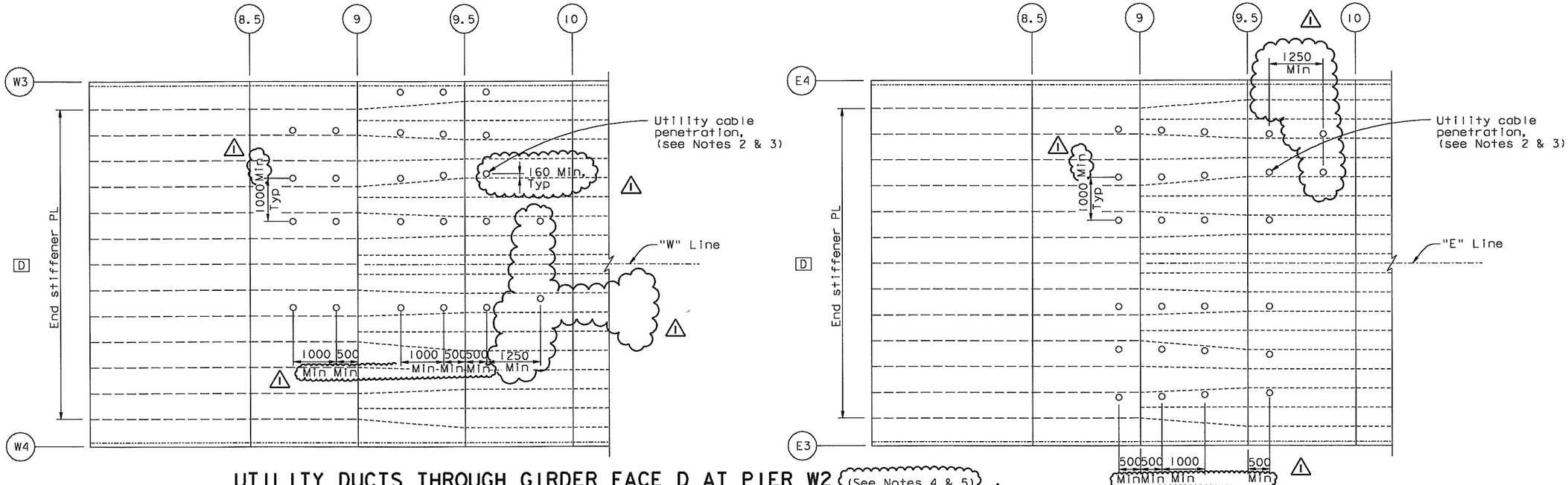

UTILITY DUCTS THROUGH GIRDER FACE D AT PIER W2 (See Notes 4 & 5)

1:50

ALL DIMENSIONS ARE IN MILLIMETERS UNLESS OTHERWISE SHOWN

100 % PS&E

DATE PLOTTED => 09 JAN 2008 TIME PLOTTED => 09:38:01

USERNAME => ptom

R. Valizadeh/V. Toan/Y.L./W.L./F.C.
DESIGN OVERSIGHT
Roger Valizadeh / Vona Toan / Y. Lin
SIGN OFF DATE 01/09/08

	BY	CHECKED
DESIGN	G. Baker	T. Ho
DETAILS	M. Gulyas	T. Ho
QUANTITIES	C. Mauch	D. Harrison

PREPARED FOR THE STATE OF CALIFORNIA DEPARTMENT OF TRANSPORTATION

R. Manzanarez
PROJECT ENGINEER

BRIDGE NO. 34-0006L/R
KILOMETER POST 13.2/13.9

SAN FRANCISCO OAKLAND BAY BRIDGE
EAST SPAN SEISMIC SAFETY PROJECT
SELF-ANCHORED SUSPENSION BRIDGE
(SUPERSTRUCTURE & TOWER)

UTILITY LAYOUT

Rev. Date: 5-18-98

ORIGINAL SCALE IN MILLIMETERS FOR REDUCED PLANS 0 10 20 30 40 50 60 70 80 90 100

CU 04
EA 0120F1

DISREGARD PRINTS BEARING EARLIER REVISION DATES

REVISION DATES (PRELIMINARY STAGE ONLY) 05/06/99 08/02/99 05/31/01 04/08/02 07/01/02 12/19/02

SHEET 547R1 OF

FILE => I:\bb\04-012001\sas\contract plans and cco\cco\in progress\cco=42s1\dgn\akmscl1.dgn