DWG NO.	DRAWING TITLE
AS-1	INDEX OF DRAWINGS GENERAL STRUCTURAL NOTES ABBREVIATIONS, AND SYMBOLS
AS-2	SERVICE PLATFORM FRAMING PLAN
AS-3	SERVICE PLATFORM FRAMING DETAILS
AS-4	SERVICE PLATFORM DETAILS
AS-5	SERVICE PLATFORM DETAILS
AS-6	MISCELLANEOUS SECTION AND DETAILS — CCR# 051
AS-7	MISCELLANEOUS SECTION AND DETAILS
AS-8	BENCH LAYOUT
AS-9	BENCH DETAILS — RFI#375 R00; RFI#794 R00
AS-10	CABLE TRAY SUPPORT PLAN — RFI#861 R00
AS-11	CABLE TRAY SUPPORT DETAIL
AS-12	PULL BOX SUPPORT PLAN, SECTIONS AND DETAILS
AS-13	ELECTRICAL PANEL SUPPORT AND SECTIONS
AS-13A	ELECTRICAL PANEL SUPPORT SECTIONS - SHEET 1
AS-13B	ELECTRICAL PANEL SUPPORT SECTIONS - SHEET 2
AS-13C	ELECTRICAL PANEL SUPPORT SECTIONS - SHEET 3
AS-14	CABLE TRAY SUPPORT DETAIL
AS-15	CABLE TRAY SUPPORT DETAIL
AS-16	CABLE TRAY SUPPORT DETAIL
AS-16A	WESTBOUND CABLE SUPPORT DETAILS AT PP 9 AND PP 10 - SHEET 1 OF 4
AS-16B	WESTBOUND CABLE SUPPORT DETAILS AT PP 9 AND PP 10 - SHEET 2 OF 4
AS-16C	WESTBOUND CABLE SUPPORT DETAILS AT PP 9 AND PP 10 - SHEET 3 OF 4
AS-16D	WESTBOUND CABLE SUPPORT DETAILS AT PP 9 AND PP 10 - SHEET 4 OF 4
AS-16E	EASTBOUND CABLE SUPPORT DETAILS AT PP 9 AND PP 10 - SHEET 1 OF 4
AS-16F	EASTBOUND CABLE SUPPORT DETAILS AT PP 9 AND PP 10 - SHEET 2 OF 4
AS-16G	EASTBOUND CABLE SUPPORT DETAILS AT PP 9 AND PP 10 - SHEET 3 OF 4
AS-16H	EASTBOUND CABLE SUPPORT DETAILS AT PP 9 AND PP 10 - SHEET 4 OF 4
AS-16J	CABLE TRAY SUPPORT DETAILS
AS-16K	OVERALL CABLE TRAY SUPPORT LOCATION PLAN HINGE K TO PP 23 - SHEET 1 OF 6
AS-16L	OVERALL CABLE TRAY SUPPORT LOCATION PLAN PP 23 TO PP 47 - SHEET 2 OF 6
AS-16M	OVERALL CABLE TRAY SUPPORT LOCATION PLAN PP 47 TO PP 69 - SHEET 3 OF 6
AS-16N	OVERALL CABLE TRAY SUPPORT LOCATION PLAN PP 69 TO PP 93 - SHEET 4 OF 6
AS-16P	OVERALL CABLE TRAY SUPPORT LOCATION PLAN PP 93 TO PP 115 - SHEET 5 OF 6

RFI#584 R00; RFI#584 R01; RFI#790 R00; RFI#793 R00; RFI#794 R00; RFI#814 R00; RFI#845 R00; RFI#857 R00; RFI#861 R00; RFI#811 R01; RFI#919 R00; RFI#919 R01

DWG NO.	DRAWING TITLE
AS-16Q	OVERALL CABLE TRAY SUPPORT LOCATION PLAN PP 115 TO HINGE A - SHEET 6 OF 6
AS-16R	OVERALL CABLE TRAY SUPPORT LOCATIONS TABLE A

RFI#584 R00; RFI#845 R00; RFI#857 R00; RFI#790 R00; RFI#793 R00; RFI#811 R01; RFI#919 R00; RFI#919 R01

GENERAL NOTES

A. STRUCTURAL NOTES

1. All structural steel shall be AASHTO M270M Grade 36.
2. Steel pipe shall be ASTM A-53 grade B.
3. All bolts shall be high- strength steel bolts conforming to AASHTO M164 (ASTM A325) Slip-Critical Class C and shall be 19.05 mm diameter unless noted otherwise on plans. All bolts shall be galvanized.
4. All welded connections shall conform to the requirements of AASHTO/AWS D1.5 Bridge Welding Code. Weld electrodes shall be E70XX.
5. Steel Grating shall be made from ASTM A-1011 mild Carbon steel. Bearing bars shall be 32 mm high by 5 mm thick at a spacing of 30 mm center to center with cross bars at a spacing of 102 mm center to center. The cross bars shall be welded or electro-forged to the rectangular shaped bearing bars by a process that combines intense hydraulic pressure with a powerful electric current. Grating shall be hot-dipped galvanizsd after fabrication. Grating shall be connnected to the platform framing using galvanized or stainles steel fasteners as approved by the Engineer.
6. All structural steel shall be Hot-dipped galvanized except as noted.
7. No field-welding shall be used for connections to box girders or crossbeams. All drawings for service platforms, cable trays, railings, ladders and other access fixtures shall be submitted to the Engineer for review and approval.
8. Working drawings of connections for service platforms, call trays, utility cabinets, railings, ladders, and other accessory fixtures shall be submitted to the Engineer for review and approval.

B. CODES AND STANDARDS

B.1 The structure has been designed in accordance with the following applicable codes and industrial standards:

1. UBC Uniform Building Code, 1997 Edition.
2. ACI American Concrete Institute "Building Code Requirements for Reinforced Concrete (ACI 318-95)"
3. AISC American Institute of Steel "Manual of Steel Construction" 9th Edition.
4. AWS American Welding Society "Structural Welding Code" ANSI/AWS D1.1-98.

ABBREVIATIONS

AB	Anchor Bolt
&	And
Arch	Architecture
@	At
∠	Angle
Add'l	Additional
Bm	Beam
Bgr	Bearing
Bott	Bottom
B.O.	Bottom of
C	Channel(Structural)
Col	Column
Conc	Concrete
Const	Construction
Const Jt	Construction Joint
Cont	Continuous
Contr	Contraction
Comp	Composite
℄	Center Line
Clr	Clear
DL	Dead Load
Deg or °	Degree
Det	Detail
Diag	Diagonal
Dia or ø	Diameter
Dim	Dimension
Dbl	Double
DN	Down
Dwg	Drawing
Do.	Ditto
Ea	Each
EF	Each Face
EW	Each way
EL	Elevation
EQ or =	Equal
Exp	Expansion
F to F	Face to Face
Fin	Finish
FB	Flat Bar
Fl	Floor
FD	Floor Drain
Ftg	Footing
Fdn	Foundation
F.S.	Far Side
Ga	Gage
Galv	Galvanized
Gr	Grade
HR	Hand Rail
Ht	Height
HP	High Point
HSB	High Strength Bolt
Horiz	Horizontal
ID	Inside Diameter
IF	Inside Face
Inv	Invert
Jt	Joint
kg	Kilogram
kN	Kilo Newton
LS	Left side
L	Length
LWC	Light Weight Concrete
Lin	Linear, Lineal
LL	Live Load
Lg	Long
LP	Low Point
MH	Man Hole
MB	Machine Bolt
Mtl	Material
Max	Maximum
MPa	Megapascal
m	Meter
mm	Millimeter
Min	Minimum
Misc	Miscellaneous
MC	Moment Connection
NF	Near Face
Neg	Negative
Nomi	Nominal
NIC	Not in Contract
No.	Number
#	Number (Rebar Size)
N.S.	Near Side
OC	On Center
Opng	Opening
Opp H	Opposite Hand
O to O	Out to Out
OD	Outside Diameter
O.F.	Outside Face
PL	Plate
Plywd	Plywood
P/L	Property Line
R	Radius
Ref	Reference
Reinf	Reinforcing
RC	Reinforced Concrete
Rev	Revision or Revise
RS	Right Side
RD	Roof Drain
Sch	Schedule
Sect	Section
Sht	Sheet
Sim	Similar
Spec	Specification
Sq	Square
m2	Square Meter
mm2	Square Millimeter
Std	Standard
Stl	Steel
Stiff	Stiffener
Stirr	Stirrup
St	Street
Sym	Symmetrical
T & B	Top and Bottom
T.O.	Top of
T.O.C	Top of Concrete
T.O.P	Top of Plate
T.O.S	Top of Steel
T.O.W	Top of Wall
Typ	Typical
Unfin	Unfinished
UNO	Unless Noted Otherwise
Vert	Vertical
WP	Work Point
WT	Water Table
Wt	Weight
WL	Wind Load
W/	With
Wd	Wood
WI	Wrought Iron

SYMBOLS

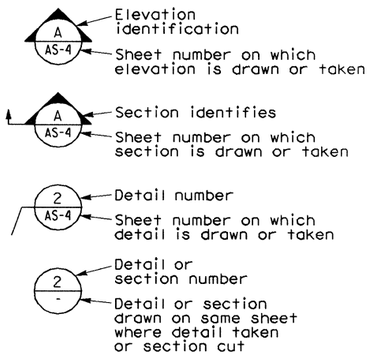

Caltrans Metric

DIST	COUNTY	ROUTE	KILOMETER POST TOTAL PROJECT	SHEET No	TOTAL SHEETS
04	SF	80	13.2/13.9	71C	1204

REGISTERED STRUCTURAL ENGINEER DATE

REGISTERED PROFESSIONAL ENGINEER — No. Exp. CIVIL — STATE OF CALIFORNIA

PLANS APPROVAL DATE

PARSONS BRINCKERHOFF QUADE & DOUGLAS, INC.
303 SECOND STREET, SUITE 700 N
SAN FRANCISCO, CA 94107

The State of California or its officers or agents shall not be responsible for the accuracy or completeness of electronic copies of this plan sheet.

Caltrans now has a web site! To get to the web site, go to http://www.dot.ca.gov

Bob Zandipour
DESIGN OVERSIGHT
4/4/04
SIGN OFF DATE

	BY	CHECKED
DESIGN	G. Benkovich	M. S. Owyang
DETAILS	R. Hernandez	M. S. Owyang
QUANTITIES	M. S. Owyang	R. Parrino

PREPARED FOR THE STATE OF CALIFORNIA DEPARTMENT OF TRANSPORTATION

Gene Lusherovich
PROJECT ENGINEER

BRIDGE NO. 34-0006
KILOMETER POST 13.2/13.9

SAS SUPERSTRUCTURE

INDEX OF DRAWINGS, GENERAL STRUCTURAL NOTES, ABBREVIATIONS AND SYMBOLS

AS-1

CU 04251
EA 0120F1

DISREGARD PRINTS BEARING EARLIER REVISION DATES →

REVISION DATES (PRELIMINARY STAGE ONLY) | SHEET | OF

DESIGN DETAIL SHEET (METRIC) (REV. 3/1/98)

ORIGINAL SCALE IN MILLIMETERS FOR REDUCED PLANS 0 10 20 30 40 50 60 70 80 90 100

FILE => \\sfoc\project\13103\MS\pse\SAS Struc\CCR\SAS CCR 51\71.dgn

USERNAME => liorico DATE PLOTTED => 2/7/2008

$FREQUEST

NOTES:

1. The Contractor shall verify all controlling dimensions before ordering or fabricating any material.
2. All structural steel shall be AASHTO M270M Grade 36.
3. All welded connections shall conform to the requirements of AASHTO/AWS D1.5 Bridge Welding Code. Weld electrodes shall be E70XX.
4. All structural steel shall be hot-dipped galvanized.
5. See electrical plans for locations. Adjust locations to clear the stiffeners in bridge girder as needed.
6. To accommodate roadway slopes, support height may be adjusted by shimming to maintain the same horizontal elevation of cable tray when more than one support is required.
7. Detail is typical for Westbound and Eastbound
8. For cable tray installation and layout, see sheets E-126, E-126A, E-212 and E-212A. except as noted.

Caltrans Metric

DIST	COUNTY	ROUTE	KILOMETER POST TOTAL PROJECT	SHEET No	TOTAL SHEETS
04	SF	80	13.2/13.9	77C	1204

REGISTERED CIVIL ENGINEER

PLANS APPROVAL DATE

REGISTERED PROFESSIONAL ENGINEER — No. — Exp. — CIVIL — STATE OF CALIFORNIA

The State of California or its officers or agents shall not be responsible for the accuracy or completeness of electronic copies of this plan sheet.

Parsons Brinckerhoff Quade & Douglas, Inc.
303 Second Street, Suite 700N
San Francisco, CA 94107

Caltrans now has a web site! To get to the web site, go to: http://www.dot.ca.gov

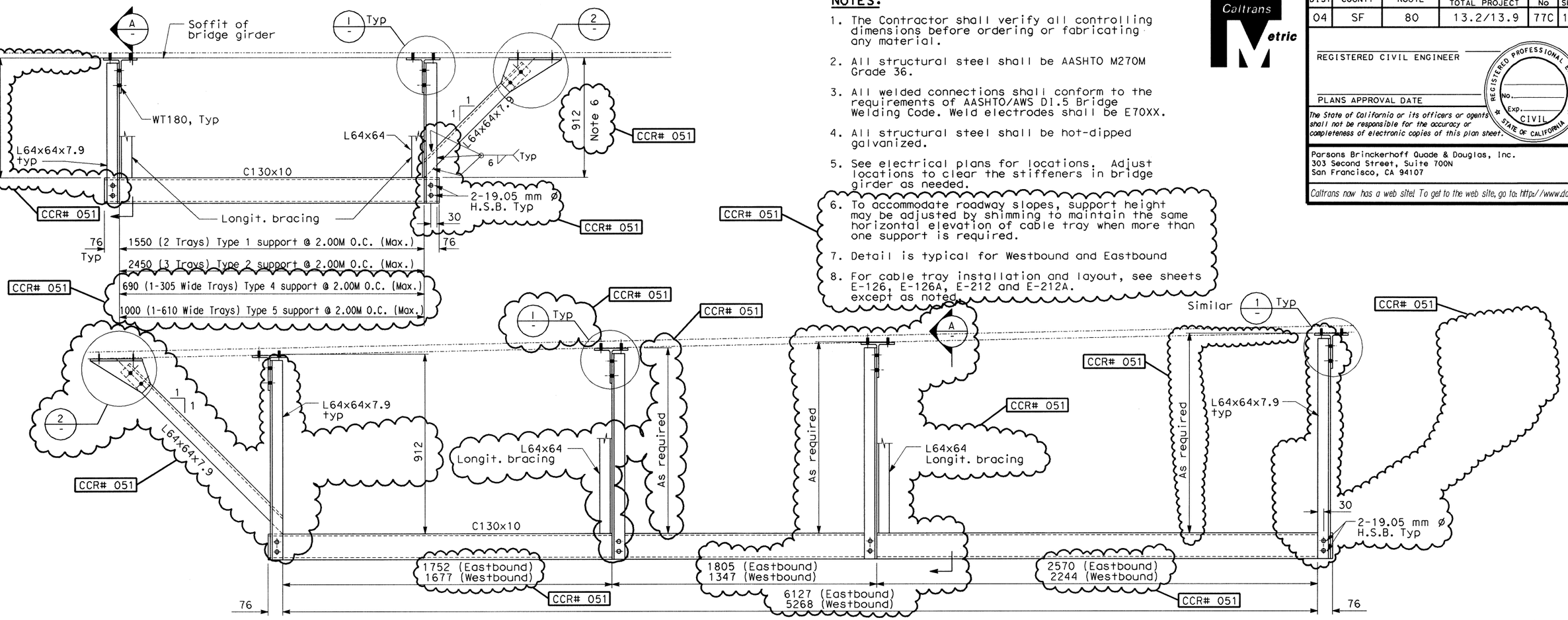

TYPICAL CABLE TRAY SUPPORT BELOW BRIDGE GIRDER (TYPE 3)

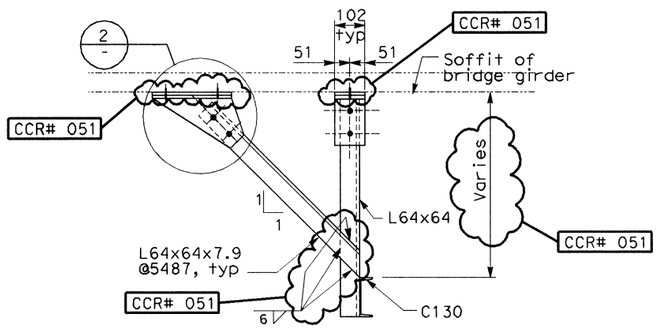

LONGITUDINAL BRACING

SECTION A
SCALE: 1:10

SCALE: 1:10

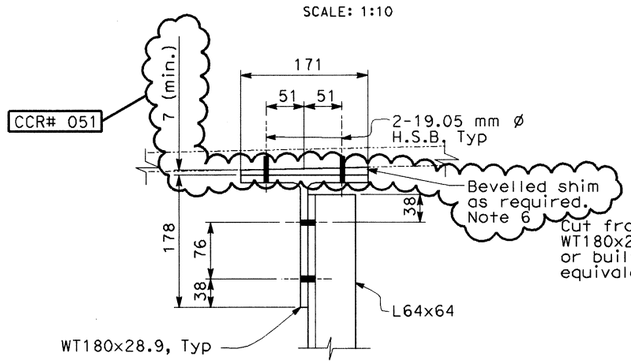

DETAIL 1
SCALE: 1:4

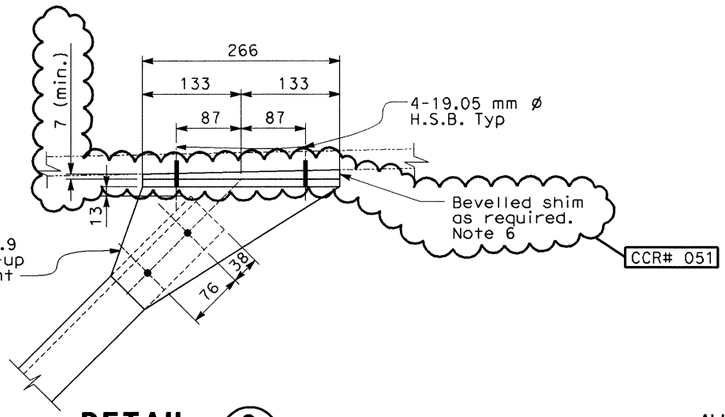

DETAIL 2
SCALE: 1:4

ALL DIMENSIONS ARE IN MILLIMETERS UNLESS OTHERWISE SHOWN

Bob Zandipour, DESIGN OVERSIGHT; 4/4/04, SIGN OFF DATE		DESIGN	I. Horton	M. S. Owyang	PREPARED FOR THE STATE OF CALIFORNIA DEPARTMENT OF TRANSPORTATION
		DETAILS	D. Chin	M. S. Owyang	
		QUANTITIES	M. S. Owyang	L. Johnson	

Gene Lusherovich, PROJECT ENGINEER

BRIDGE NO. 34-0006
KILOMETER POST 13.2/13.9

SAS SUPERSTRUCTURE

MISCELLANEOUS SECTIONS AND DETAILS SHEET 2 OF 2

AS-7

DESIGN DETAIL SHEET (METRIC) (REV. 3/1/98)

ORIGINAL SCALE IN MILLIMETERS FOR REDUCED PLANS 0 10 20 30 40 50 60 70 80 90 100

CU 04251
EA 0120F1

DISREGARD PRINTS BEARING EARLIER REVISION DATES

REVISION DATES (PRELIMINARY STAGE ONLY) | SHEET | OF

FILE => \\sfoc\project\13103\MS\pse\SAS Struc\CCR\SAS CCR 51\77.dgn

$FREQUEST

USERNAME => reyesl DATE PLOTTED => 2/12/2008 TIME PLOTTED => 9:48:41 AM

DIST	COUNTY	ROUTE	KILOMETER POST TOTAL PROJECT	SHEET No	TOTAL SHEETS
04	SF	80	13.2/13.9	80C	1204

Caltrans Metric

REGISTERED CIVIL ENGINEER

PLANS APPROVAL DATE

REGISTERED PROFESSIONAL ENGINEER No. Exp. CIVIL STATE OF CALIFORNIA

The State of California or its officers or agents shall not be responsible for the accuracy or completeness of electronic copies of this plan sheet.

Parsons Brinckerhoff Quade & Douglas, Inc.
303 Second Street, Suite 700N
San Francisco, CA 94107

Caltrans now has a web site! To get to the web site, go to: http://www.dot.ca.gov

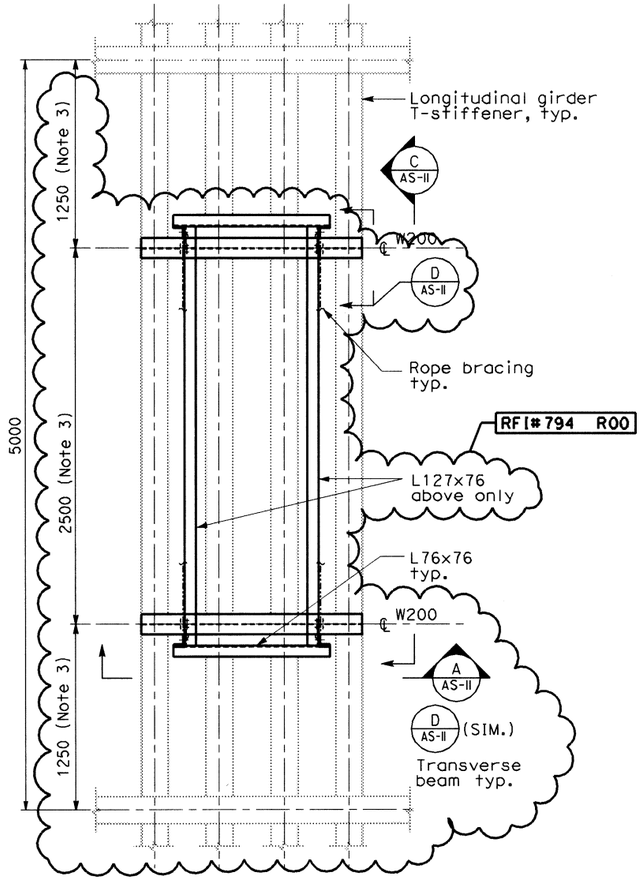

AT T-STIFFENERS

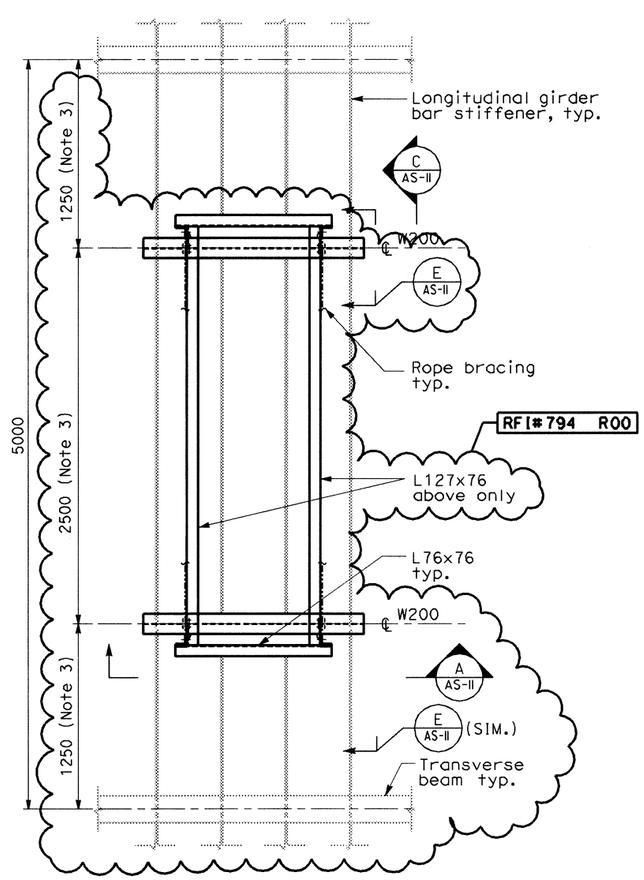

AT BAR-STIFFENERS

NOTES:

1. The contractor shall verify all controlling field dimensions before ordering or fabricating any material.
2. For structural notes, see sheet AS-1.
3. For cable tray support locations, see electrical plans and dwgs AS-16K through AS-16R. RFI#794 R00
4. For longitudinal girder stiffener sizes and locations, see SAS superstructure plan RFI#794 R00

CABLE TRAY SUPPORT PLAN (TYPE I AND II)

RFI#794 R00

SCALE 1:20

ALL DIMENSIONS ARE IN MILLIMETERS UNLESS OTHERWISE SHOWN

Bob Zandipour DESIGN OVERSIGHT SIGN OFF DATE	DESIGN	BY M. S. Owyang	CHECKED R. Howell	PREPARED FOR THE STATE OF CALIFORNIA DEPARTMENT OF TRANSPORTATION	Gene Lusherovich PROJECT ENGINEER	BRIDGE NO. 34-0006 KILOMETER POST 13.2/13.9	SAS SUPERSTRUCTURE CABLE TRAY SUPPORT PLAN AS-10
	DETAILS	BY D. Chin	CHECKED M. S. Owyang				
	QUANTITIES	BY I. Horton	CHECKED P. McNamee				

DESIGN DETAIL SHEET (METRIC) (REV. 3/1/98)

ORIGINAL SCALE IN MILLIMETERS FOR REDUCED PLANS 0 10 20 30 40 50 60 70 80 90 100

CU 04251
EA 0120F1

DISREGARD PRINTS BEARING EARLIER REVISION DATES

REVISION DATES (PRELIMINARY STAGE ONLY) SHEET OF

FILE => \\sfoc\project\13103\MS\pse\SAS Struc\RFI\SAS RFI 794\80.dgn

$FREQUEST

USERNAME => reyesl DATE PLOTTED => 2/11/2008 TIME PLOTTED => 10:03:25 AM

DIST	COUNTY	ROUTE	KILOMETER POST TOTAL PROJECT	SHEET No	TOTAL SHEETS
04	SF	80	13.2/13.9	81C	1204

REGISTERED CIVIL ENGINEER

PLANS APPROVAL DATE

REGISTERED PROFESSIONAL ENGINEER — No. — Exp. — CIVIL — STATE OF CALIFORNIA

The State of California or its officers or agents shall not be responsible for the accuracy or completeness of electronic copies of this plan sheet.

Parsons Brinckerhoff Quade & Douglas, Inc.
303 Second Street, Suite 700N
San Francisco, CA 94107

Caltrans now has a web site! To get to the web site, go to: http://www.dot.ca.gov

NOTES:

1. The contractor shall verify all controlling field dimensions before ordering or fabricating any material.
2. For structural notes, see sheet AS-1.
3. For cable tray support locations, see electrical plans and dwgs. AS-16K through AS-16R.
4. Section B, Type III cable tray support is deleted.

RFI#794 R00

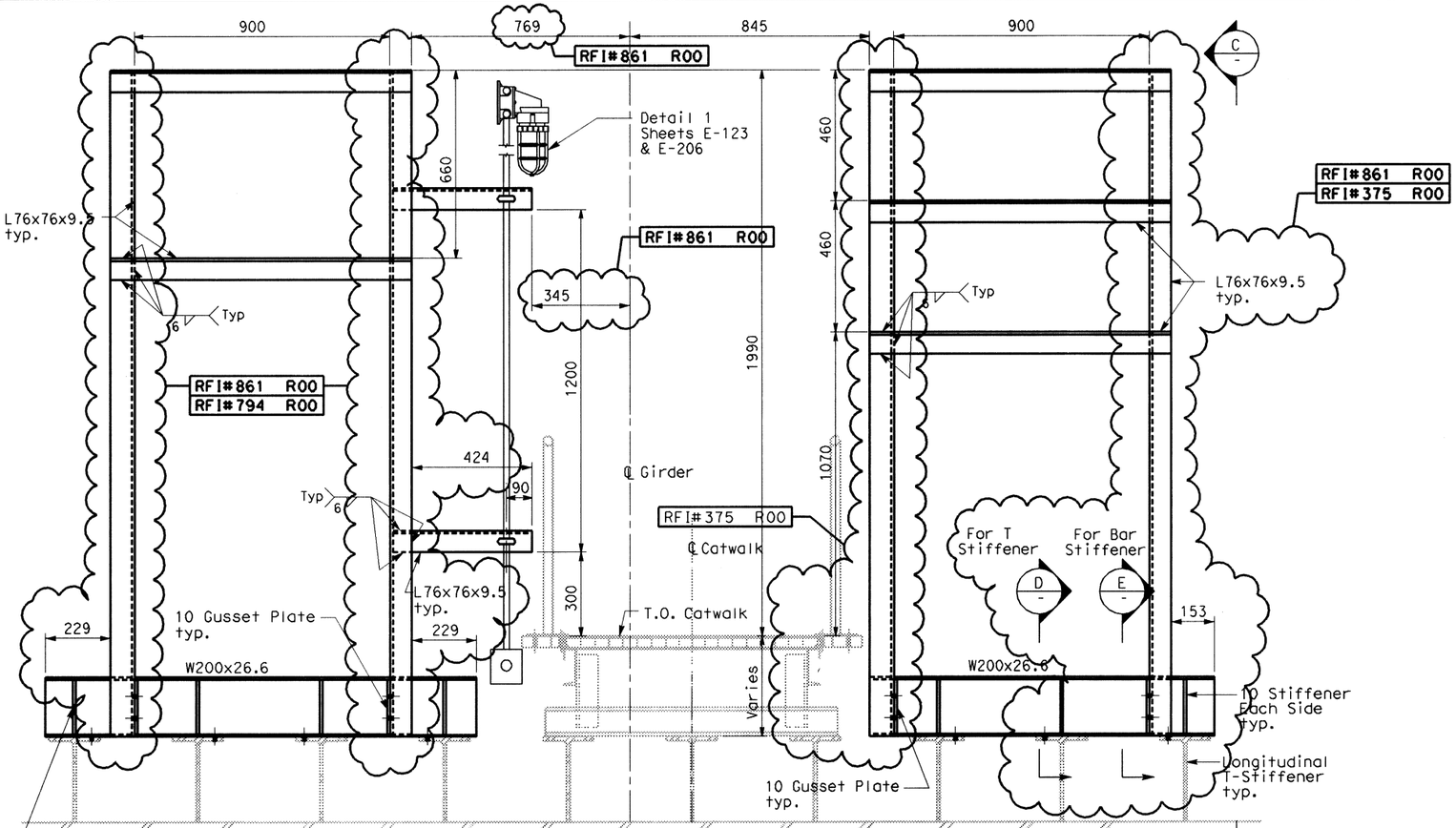

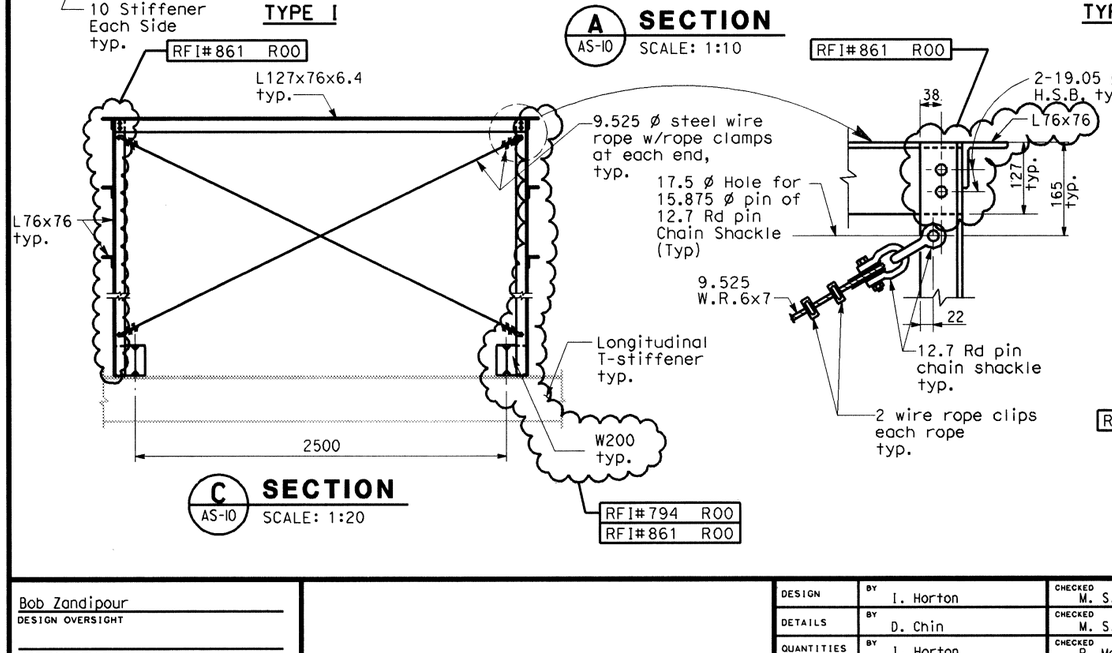

A SECTION AS-10 SCALE: 1:10

C SECTION AS-10 SCALE: 1:20

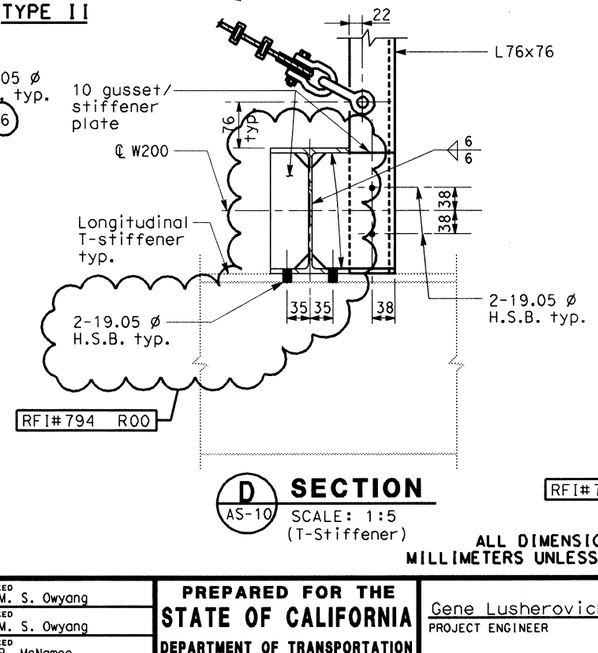

D SECTION AS-10 SCALE: 1:5 (T-Stiffener)

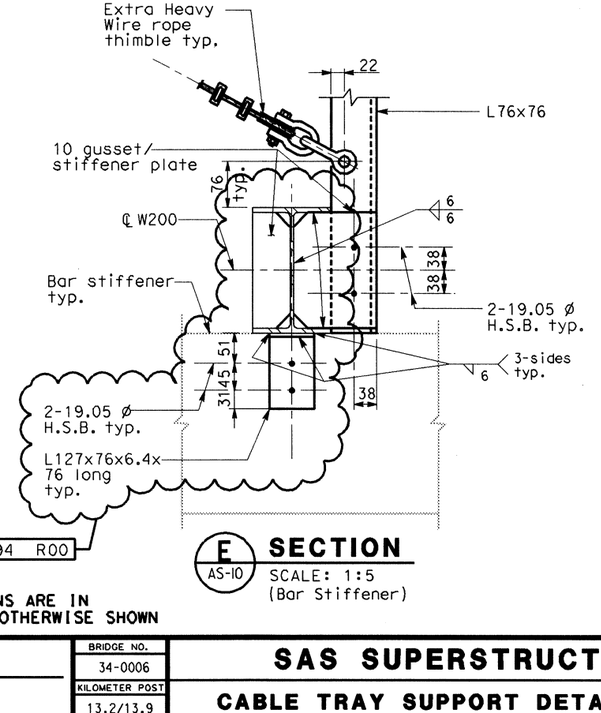

E SECTION AS-10 SCALE: 1:5 (Bar Stiffener)

ALL DIMENSIONS ARE IN MILLIMETERS UNLESS OTHERWISE SHOWN

Bob Zandipour, DESIGN OVERSIGHT	DESIGN	I. Horton	M. S. Owyang
SIGN OFF DATE	DETAILS	D. Chin	M. S. Owyang
	QUANTITIES	I. Horton	P. McNamee

PREPARED FOR THE STATE OF CALIFORNIA DEPARTMENT OF TRANSPORTATION

Gene Lusherovich, PROJECT ENGINEER

BRIDGE NO. 34-0006 | KILOMETER POST 13.2/13.9

SAS SUPERSTRUCTURE

CABLE TRAY SUPPORT DETAIL

AS-11

DESIGN DETAIL SHEET (METRIC) (REV. 3/1/98)

ORIGINAL SCALE IN MILLIMETERS FOR REDUCED PLANS 0 10 20 30 40 50 60 70 80 90 100

CU 04251
EA 0120F1

DISREGARD PRINTS BEARING EARLIER REVISION DATES

REVISION DATES (PRELIMINARY STAGE ONLY)

SHEET OF

FILE => \\sfoc\project\13103\MS\pse\SAS Struc\RFI\SAS RFI 794\81.dgn

DATE PLOTTED => 2/11/2008 TIME PLOTTED => 10:40:37 AM

USERNAME => reyes

SF REQUEST

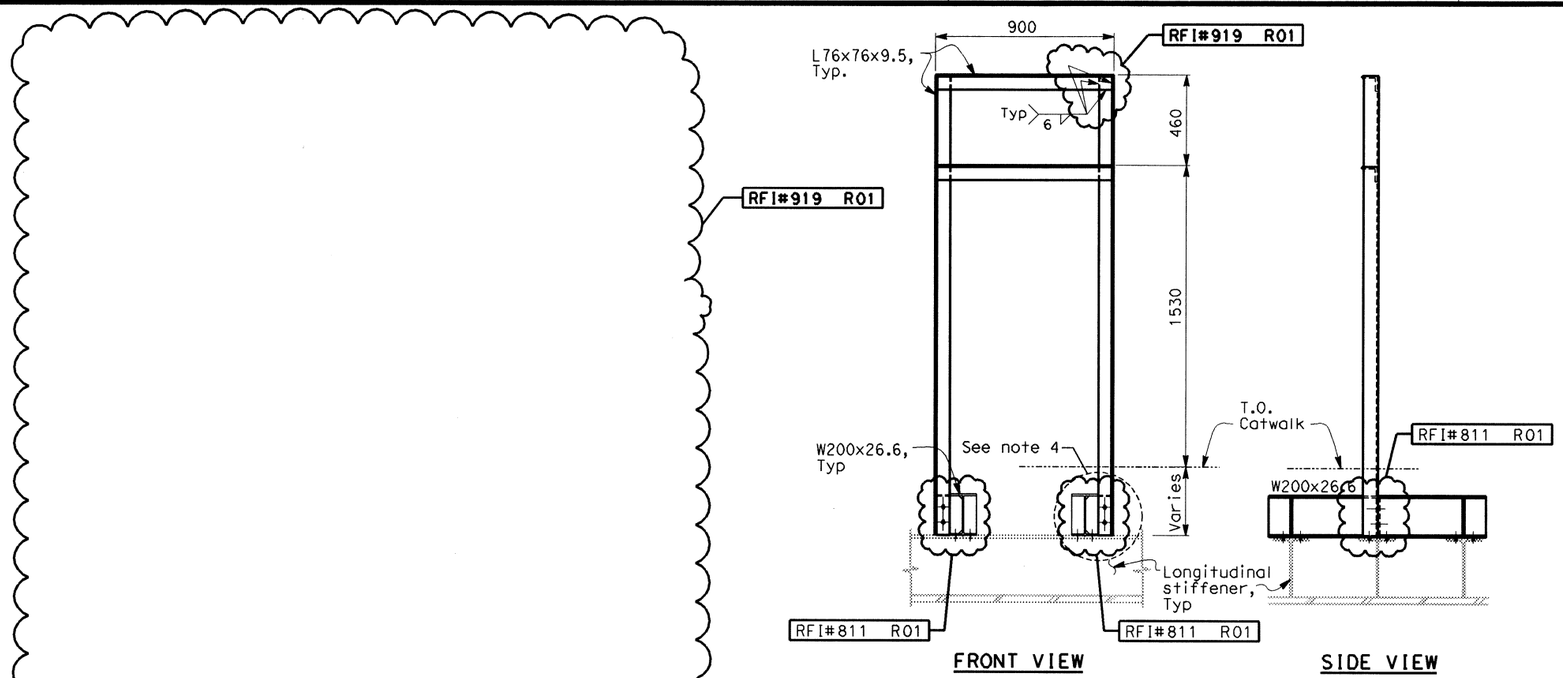

TYPE V
SCALE: 1:15

DIST	COUNTY	ROUTE	KILOMETER POST TOTAL PROJECT	SHEET No	TOTAL SHEETS
04	SF	80	13.2/13.9	84C	1204

REGISTERED CIVIL ENGINEER

PLANS APPROVAL DATE

REGISTERED PROFESSIONAL ENGINEER — NO. — Exp. — CIVIL — STATE OF CALIFORNIA

The State of California or its officers or agents shall not be responsible for the accuracy or completeness of electronic copies of this plan sheet.

Parsons Brinckerhoff Quade & Douglas, Inc.
303 Second Street, Suite 700N
San Francisco, CA 94107

Caltrans now has a web site! To get to the web site, go to: http://www.dot.ca.gov

NOTES:

1. The contractor shall verify all controlling field dimensions before ordering or fabricating any material.
2. For structural notes, see sheet AS-1.
3. For cable tray support locations, see electrical plans and dwgs AS-16K through AS-16R. RFI#919 R01
4. For details not shown, see sheet AS-11.

RFI#919 R01

5. For cable tray installation and layout, see sheets E124A, E-124B, E-207A, E-207B and E-207C.
6. Section A-A, Type IV cable tray support is deleted.

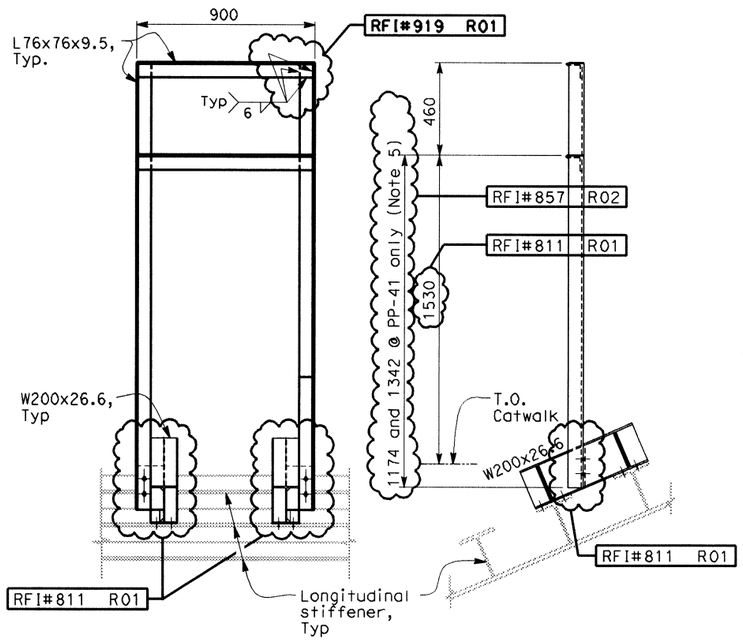

TYPE VI
SCALE: 1:15

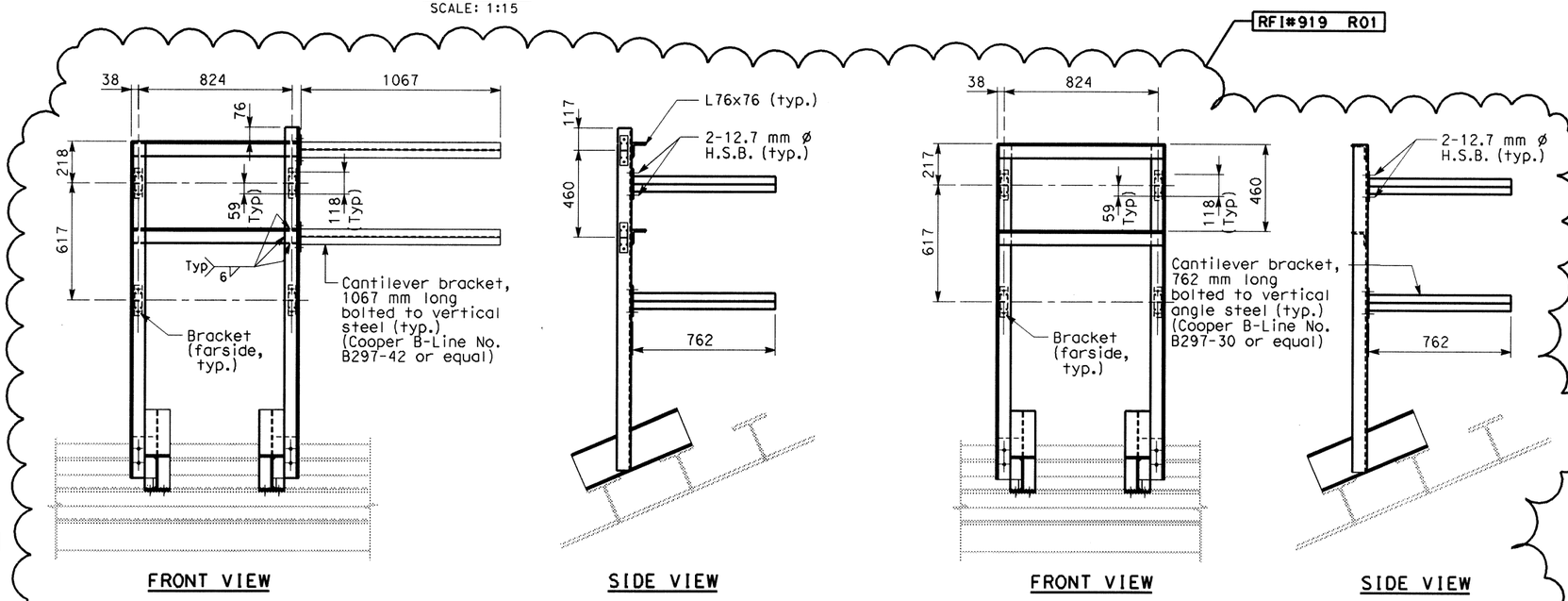

TYPE VI (MODIFIED)
PP 14 ONLY
SCALE: 1:15

TYPE VI
PP 32, PP 50, PP 80 AND PP 110
SCALE: 1:15

ALL DIMENSIONS ARE IN MILLIMETERS UNLESS OTHERWISE SHOWN

Bob Zandipour
DESIGN OVERSIGHT

SIGN OFF DATE

	BY	CHECKED
DESIGN	I. Horton	M. S. Owyang
DETAILS	D. Chin	M. S. Owyang
QUANTITIES	I. Horton	P. McNamee

PREPARED FOR THE
STATE OF CALIFORNIA
DEPARTMENT OF TRANSPORTATION

Gene Lusherovich
PROJECT ENGINEER

BRIDGE NO.	34-0006
KILOMETER POST	13.2/13.9

SAS SUPERSTRUCTURE
CABLE TRAY SUPPORT DETAIL
AS-14

DESIGN DETAIL SHEET (METRIC) (REV. 3/1/98)

ORIGINAL SCALE IN MILLIMETERS FOR REDUCED PLANS 0 10 20 30 40 50 60 70 80 90 100

CU 04251
EA 0120F1

DISREGARD PRINTS BEARING EARLIER REVISION DATES →

REVISION DATES (PRELIMINARY STAGE ONLY) | SHEET | OF

FILE => \\sfoc\project\13103\ms\pse\sas struc\rfi\sas rfi 919\84.dgn

USERNAME => lloricco DATE PLOTTED => 2/7/2008 TIME PLOTTED => 5:13:34 PM

&if REQUEST

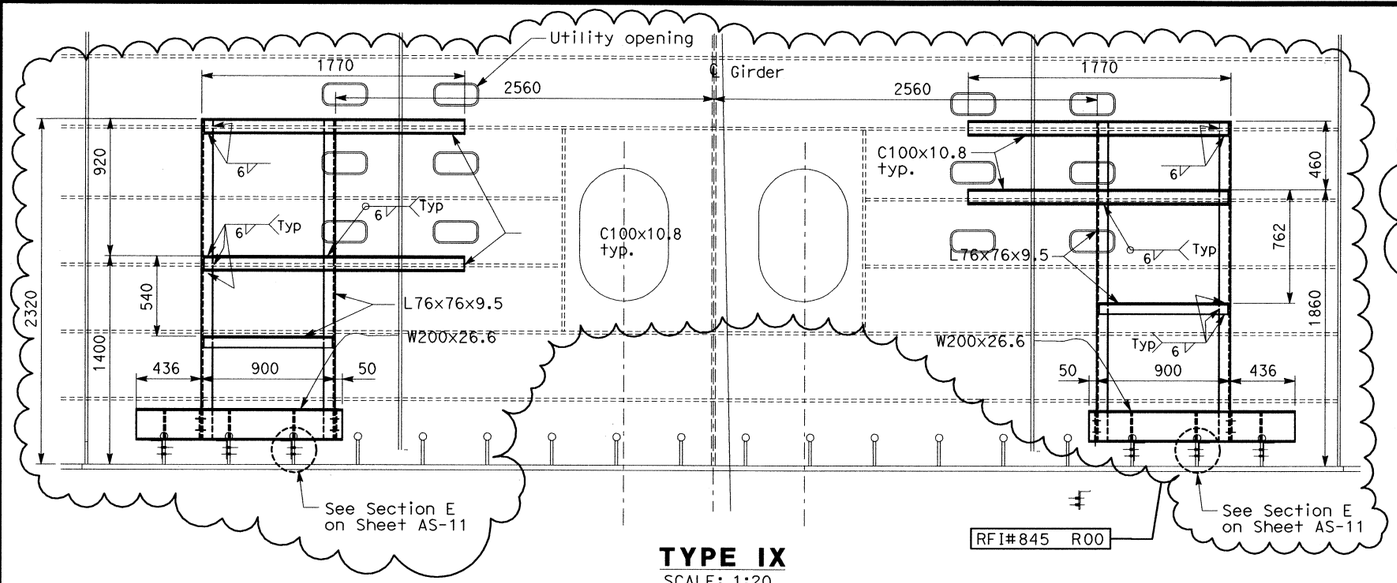

TYPE IX
SCALE: 1:20

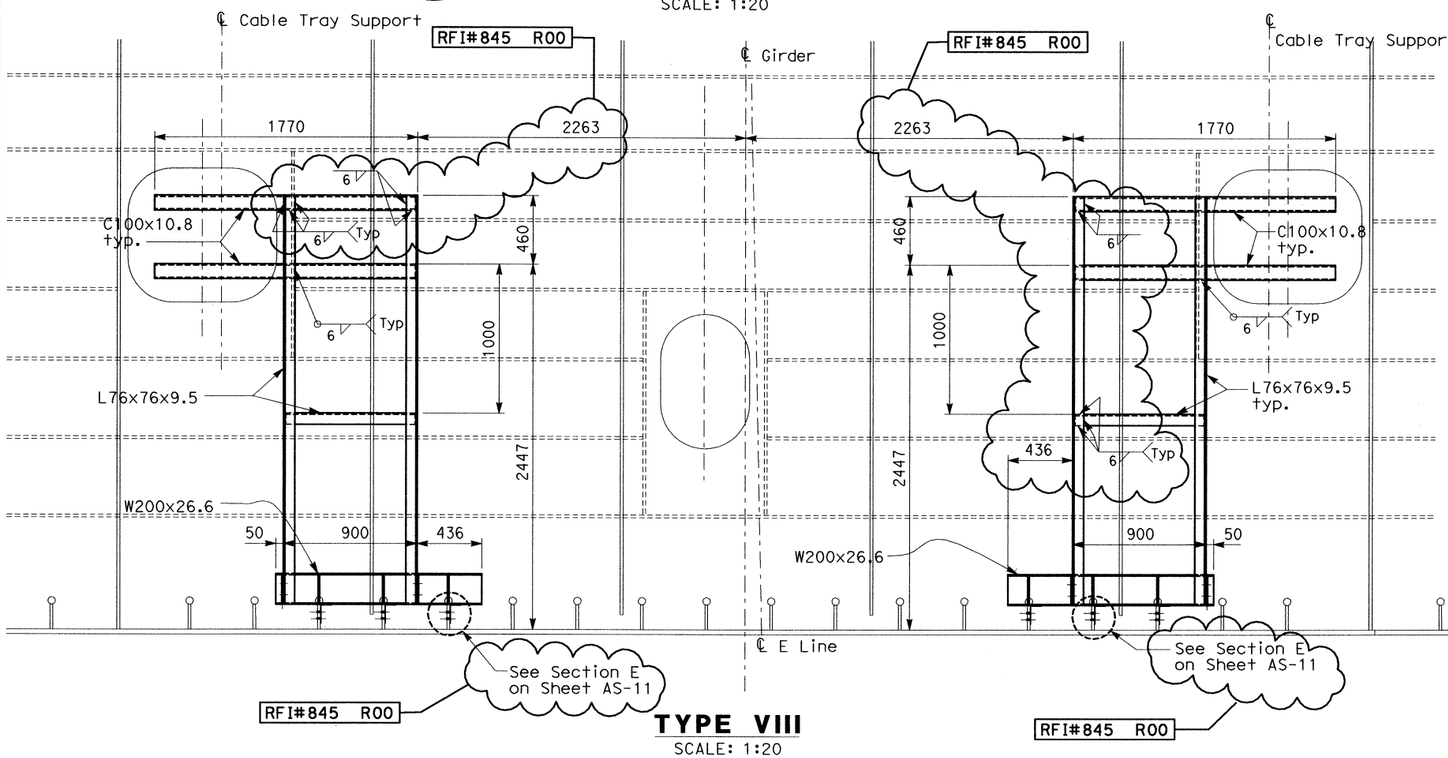

TYPE VIII
SCALE: 1:20

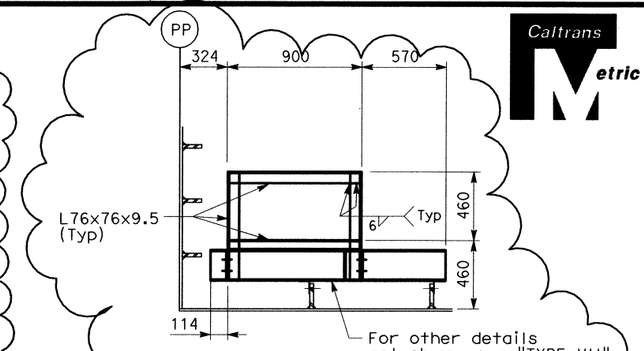

TYPE VIIA
SCALE: 1:20

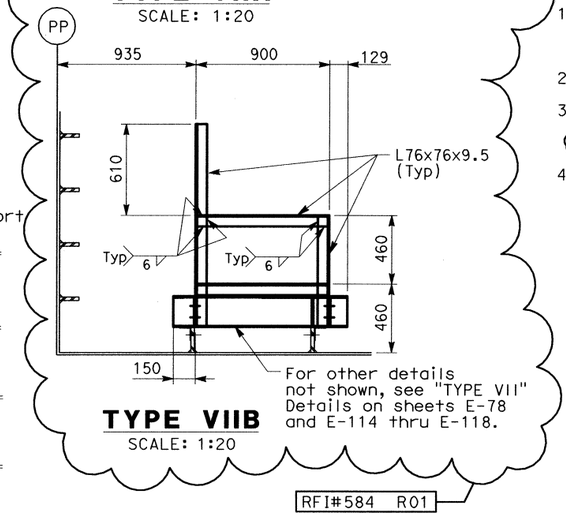

TYPE VIIB
SCALE: 1:20

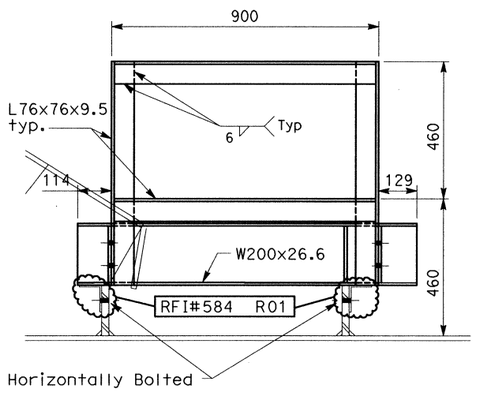

FRONT VIEW

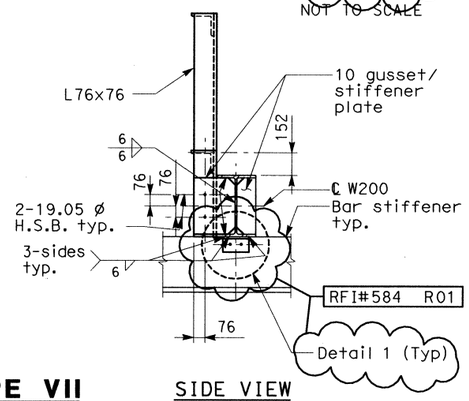

SIDE VIEW

TYPE VII
SCALE: 1:10

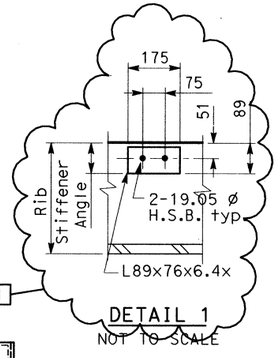

DETAIL 1
NOT TO SCALE

ALL DIMENSIONS ARE IN MILLIMETERS UNLESS OTHERWISE SHOWN

NOTES:

1. The contractor shall verify all controlling field dimensions before ordering or fabricating any material.
2. For structural notes, see sheet AS-1.
3. For cable tray support locations, see electrical plans and dwgs AS-16K through AS-16R.
4. For details not shown, see sheet AS-11.

RFI#584 R01

Caltrans Metric

DIST	COUNTY	ROUTE	KILOMETER POST TOTAL PROJECT	SHEET No	TOTAL SHEETS
04	SF	80	13.2/13.9	85C	1204

REGISTERED CIVIL ENGINEER

PLANS APPROVAL DATE

REGISTERED PROFESSIONAL ENGINEER No. Exp. STATE OF CALIFORNIA

The State of California or its officers or agents shall not be responsible for the accuracy or completeness of electronic copies of this plan sheet.

Parsons Brinckerhoff Quade & Douglas, Inc.
303 Second Street, Suite 700N
San Francisco, CA 94107

Caltrans now has a web site! To get to the web site, go to: http://www.dot.ca.gov

Bob Zandipour
DESIGN OVERSIGHT
4-14-04
SIGN OFF DATE

	BY	CHECKED
DESIGN	I. Horton	M. S. Owyang
DETAILS	D. Chin	M. S. Owyang
QUANTITIES	I. Horton	P. McNamee

PREPARED FOR THE STATE OF CALIFORNIA DEPARTMENT OF TRANSPORTATION

Gene Lusherovich
PROJECT ENGINEER

BRIDGE NO.	
34-0006	SAS SUPERSTRUCTURE
KILOMETER POST	CABLE TRAY SUPPORT DETAIL
13.2/13.9	AS-15

DESIGN DETAIL SHEET (METRIC) (REV. 3/1/98)

ORIGINAL SCALE IN MILLIMETERS FOR REDUCED PLANS 0 10 20 30 40 50 60 70 80 90 100

CU 04251
EA 0120F1

DISREGARD PRINTS BEARING EARLIER REVISION DATES

REVISION DATES (PRELIMINARY STAGE ONLY)

SHEET OF

$REQUEST

FILE => $REQUEST

DATE PLOTTED => $DATE TIME PLOTTED => $TIME USERNAME => $USER

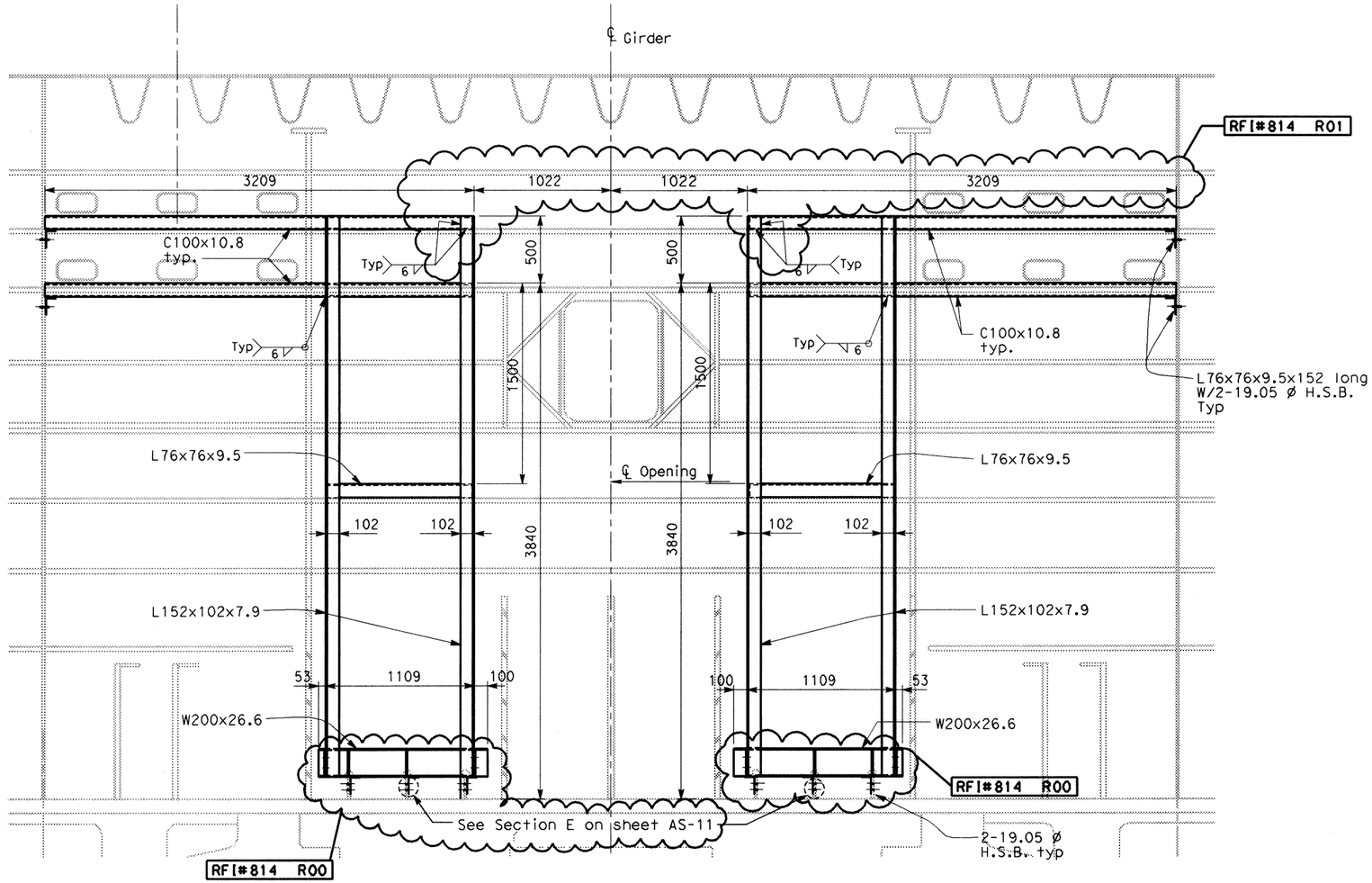

TYPE X
SCALE: 1:20

NOTES:

1. The contractor shall verify all controlling field dimensions before ordering or fabricating any material.
2. For structural notes, see sheet AS-1.
3. For cable tray support locations, see electrical plans and drawings AS-16K through AS-16R.
4. For details not shown, see sheet AS-11.

RFI#814 R01

1. The contractor shall verify all controlling field dimensions before ordering or fabricating any material.
2. For structural notes, see sheet AS-1.
3. For cable tray support locations, see electrical plans and drawings AS-16K through AS-16R.
4. For details not shown, see sheet AS-11.

ALL DIMENSIONS ARE IN MILLIMETERS UNLESS OTHERWISE SHOWN

Caltrans Metric

DIST	COUNTY	ROUTE	KILOMETER POST TOTAL PROJECT	SHEET No	TOTAL SHEETS
04	SF	80	13.2/13.9	86C	1204

REGISTERED STRUCTURAL ENGINEER DATE

PLANS APPROVAL DATE

REGISTERED PROFESSIONAL ENGINEER — No. Exp. CIVIL — STATE OF CALIFORNIA

The State of California or its officers or agents shall not be responsible for the accuracy or completeness of electronic copies of this plan sheet.

Parsons Brinckerhoff Quade & Douglas, Inc.
303 Second Street, Suite 700N
San Francisco, CA 94107

Caltrans now has a web site! To get to the web site, go to http://www.dot.ca.gov

DESIGN OVERSIGHT

SIGN OFF DATE

	BY	CHECKED
DESIGN	I. Horton	M. S. Owyang
DETAILS	D. Chin	M. S. Owyang
QUANTITIES	I. Horton	P. McNamee

PREPARED FOR THE STATE OF CALIFORNIA DEPARTMENT OF TRANSPORTATION

PROJECT ENGINEER

BRIDGE NO.

KILOMETER POST

SAS SUPERSTRUCTURE

CABLE TRAY SUPPORT DETAIL AS-16

DESIGN DETAIL SHEET (METRIC) (REV. 3/1/98)

ORIGINAL SCALE IN MILLIMETERS FOR REDUCED PLANS 0 10 20 30 40 50 60 70 80 90 100

CU 04251
EA 0120F1

DISREGARD PRINTS BEARING EARLIER REVISION DATES →

REVISION DATES (PRELIMINARY STAGE ONLY)

SHEET OF

FILE => \\sfoc\project\13103\MS\pse\SAS Struc\RFI\SAS RFI 814\86.dgn

USERNAME => lhorico DATE PLOTTED => 2/7/2008 TIME PLOTTED => 4:56:53 PM

$FREQUEST

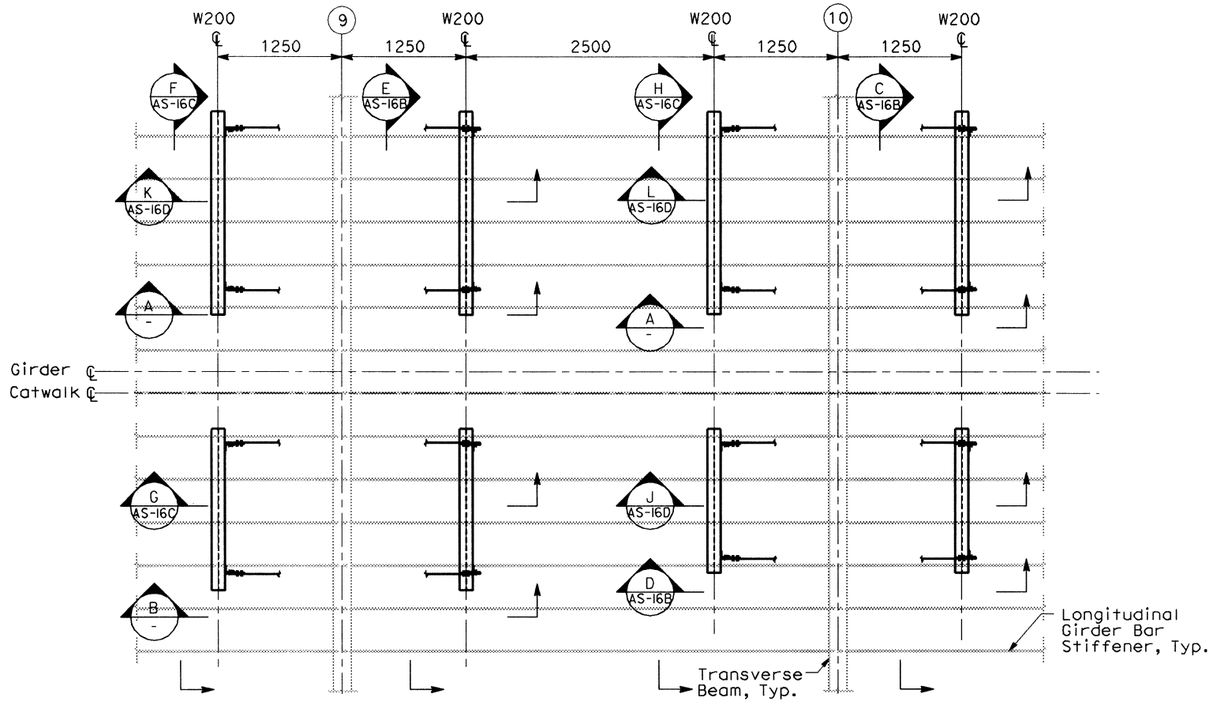

WESTBOUND CABLE SUPPORT PLAN - PANEL POINTS 9 AND 10

SCALE: 1:30

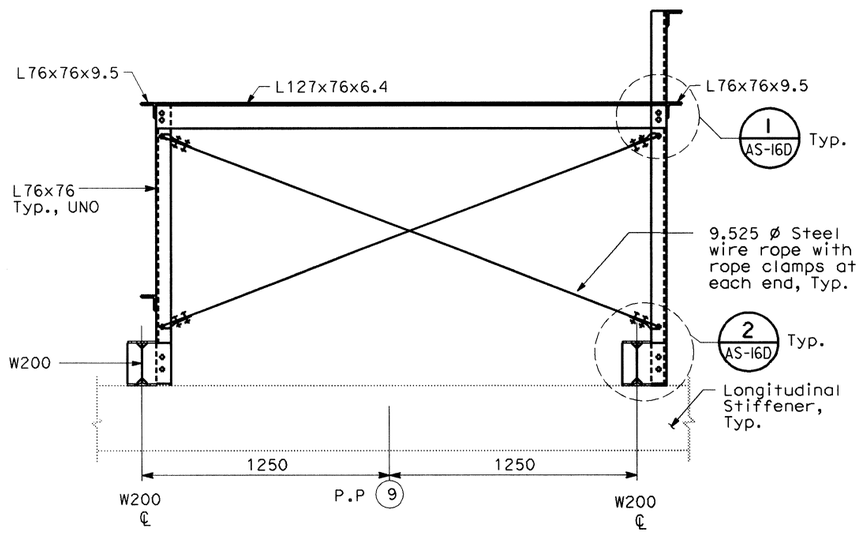

B - SECTION

SCALE: 1:15

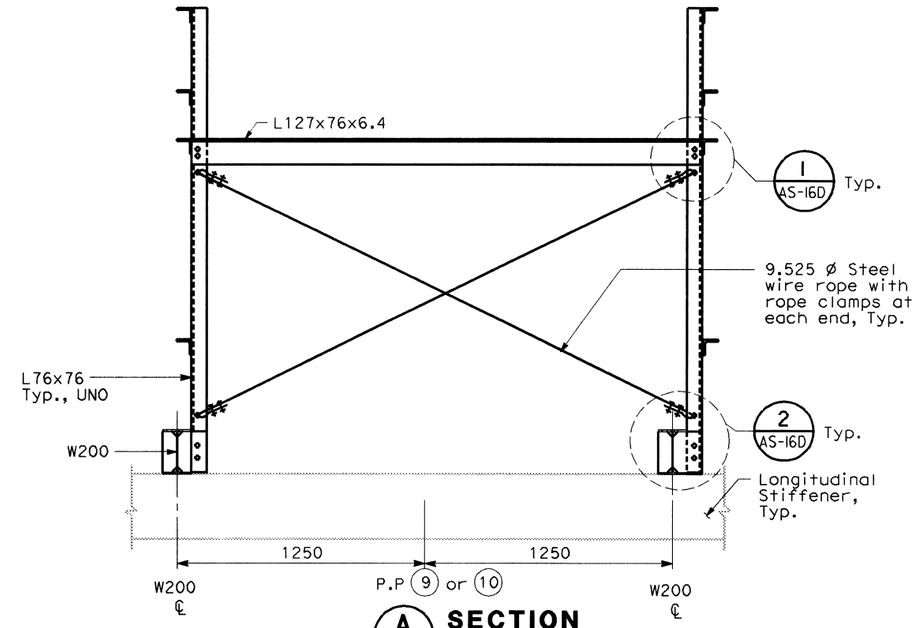

A - SECTION

SCALE: 1:15

ALL DIMENSIONS ARE IN MILLIMETERS UNLESS OTHERWISE SHOWN

RFI# 793 R00

Caltrans Metric

DIST	COUNTY	ROUTE	KILOMETER POST TOTAL PROJECT	SHEET No	TOTAL SHEETS
04	SF	80	13.2/13.9	86S10	1204

REGISTERED CIVIL ENGINEER

PLANS APPROVAL DATE

REGISTERED PROFESSIONAL ENGINEER — NO. — Exp. — CIVIL — STATE OF CALIFORNIA

The State of California or its officers or agents shall not be responsible for the accuracy or completeness of electronic copies of this plan sheet.

Parsons Brinckerhoff Quade & Douglas, Inc.
303 Second Street, Suite 700N
San Francisco, CA 94107

Caltrans now has a web site! To get to the web site, go to: http://www.dot.ca.gov

NOTES:

1. For structural notes, see sheet AS-1.
2. For cable tray support locations, see electrical plans and dwgs AS-16K and AS-16R.

Bob Zandipour
DESIGN OVERSIGHT

SIGN OFF DATE

	BY	CHECKED
DESIGN	L. Johnson	M. S. Owyang
DETAILS	A. Antonio	L. Johnson
QUANTITIES	L. Johnson	P. McNamee

PREPARED FOR THE STATE OF CALIFORNIA
DEPARTMENT OF TRANSPORTATION

Gene Lusherovich
PROJECT ENGINEER

BRIDGE NO.	KILOMETER POST
34-0006	13.2/13.9

SAS SUPERSTRUCTURE

WESTBOUND CABLE TRAY SUPPORT DETAILS AT PP 9 AND PP 10 - SHEET 1 OF 4

AS-16A

DESIGN DETAIL SHEET (METRIC) (REV. 3/1/98)

ORIGINAL SCALE IN MILLIMETERS FOR REDUCED PLANS 0 10 20 30 40 50 60 70 80 90 100

CU 04251
EA 0120F1

DISREGARD PRINTS BEARING EARLIER REVISION DATES

REVISION DATES (PRELIMINARY STAGE ONLY)

SHEET OF

FILE => t:\13103\MS\pse\SAS Struc\RFI\SAS RFI 793-Completed AS shts. see CCO 42S1\86S1.dgn

$FREQUEST

USERNAME => kurnovsk DATE PLOTTED => 2/8/2008 TIME PLOTTED => 1:23:16 PM

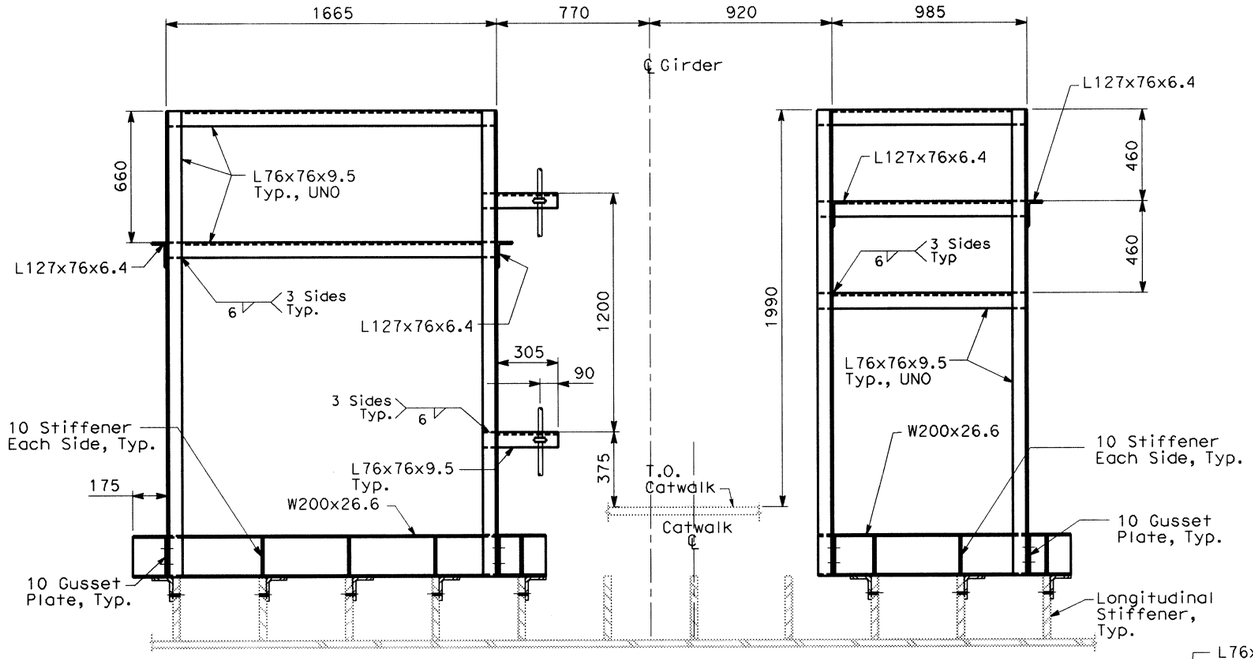

C AS-16A **SECTION**
SCALE: 1:15

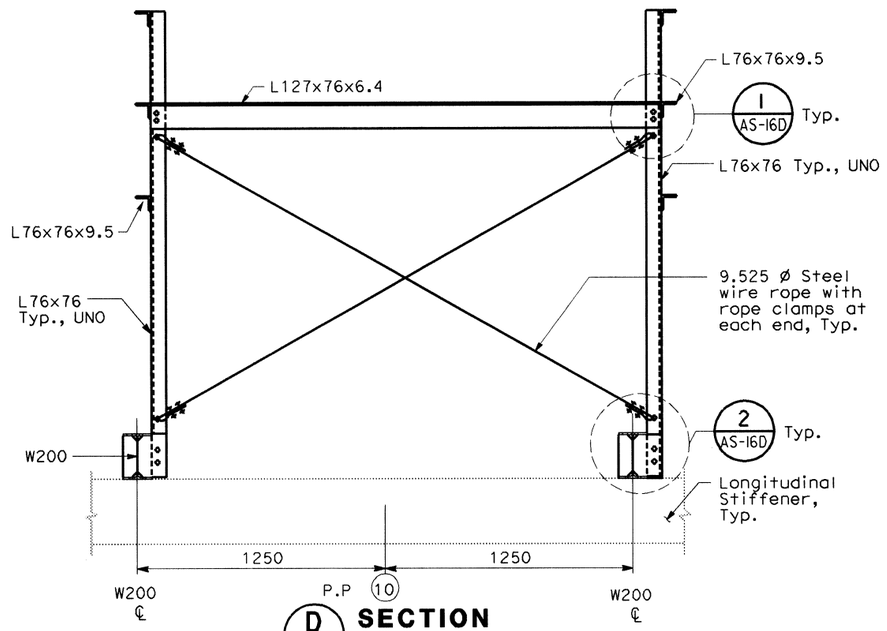

D AS-16A **SECTION**
SCALE: 1:15

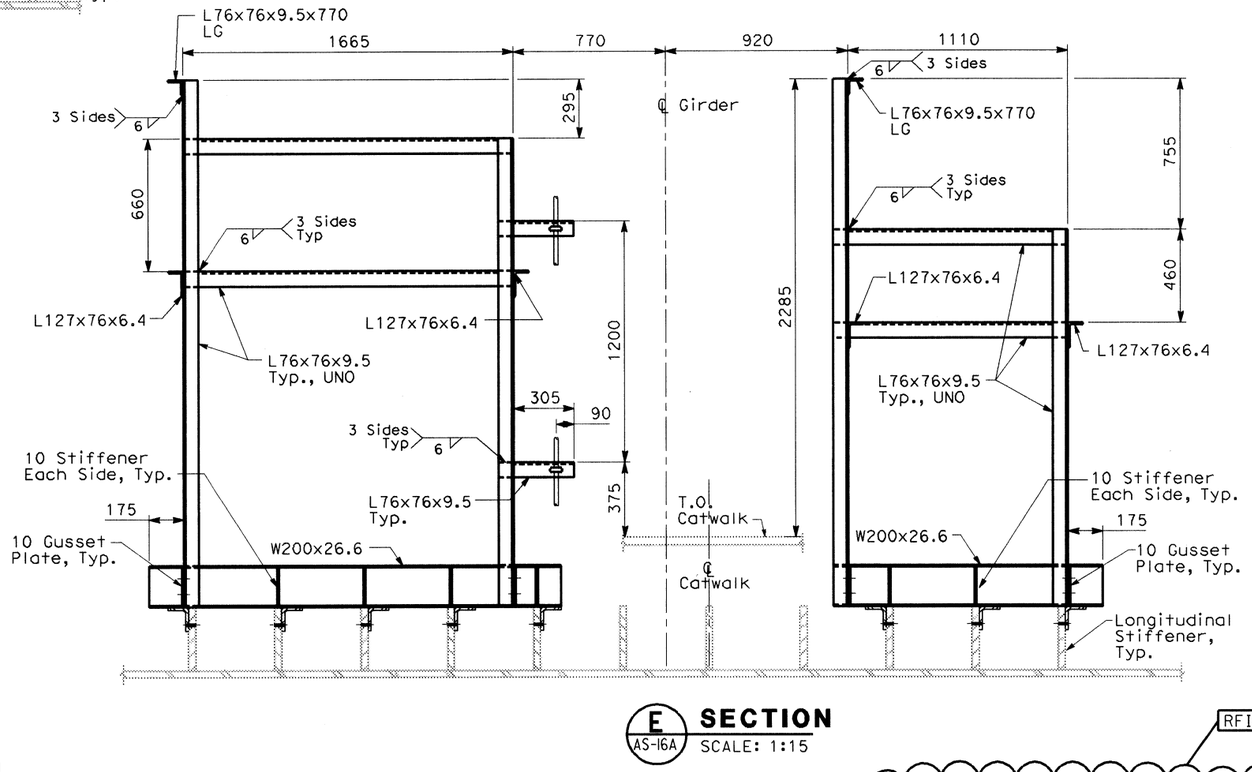

E AS-16A **SECTION**
SCALE: 1:15

RFI# 793 R00

ALL DIMENSIONS ARE IN
MILLIMETERS UNLESS OTHERWISE SHOWN

Caltrans Metric

DIST	COUNTY	ROUTE	KILOMETER POST TOTAL PROJECT	SHEET No	TOTAL SHEETS
04	SF	80	13.2/13.9	86S2C	1204

REGISTERED CIVIL ENGINEER

PLANS APPROVAL DATE

REGISTERED PROFESSIONAL ENGINEER — No. — Exp. — CIVIL — STATE OF CALIFORNIA

The State of California or its officers or agents shall not be responsible for the accuracy or completeness of electronic copies of this plan sheet.

Parsons Brinckerhoff Quade & Douglas, Inc.
303 Second Street, Suite 700N
San Francisco, CA 94107

Caltrans now has a web site! To get to the web site, go to: http://www.dot.ca.gov

NOTES:

1. For structural notes, see sheet AS-1.
2. For cable tray support locations, see electrical plans and dwgs AS-16K and AS-R.

Bob Zandipour
DESIGN OVERSIGHT

SIGN OFF DATE

	BY	CHECKED
DESIGN	L. Johnson	M. S. Owyang
DETAILS	A. Antonio	L. Johnson
QUANTITIES	L. Johnson	P. McNamee

PREPARED FOR THE STATE OF CALIFORNIA DEPARTMENT OF TRANSPORTATION

Brady Nadell
PROJECT ENGINEER

CU 04251
EA 0120F1

BRIDGE NO. 34-0006
KILOMETER POST 13.2/13.9

SAS SUPERSTRUCTURE

WESTBOUND CABLE TRAY SUPPORT DETAILS AT PP 9 AND PP 10 - SHEET 2 OF 4

AS-16B

DESIGN DETAIL SHEET (METRIC) (REV. 3/1/98)

ORIGINAL SCALE IN MILLIMETERS FOR REDUCED PLANS 0 10 20 30 40 50 60 70 80 90 100

DISREGARD PRINTS BEARING EARLIER REVISION DATES

REVISION DATES (PRELIMINARY STAGE ONLY)

SHEET OF

FILE => \\sfoc\project\13103\MS\pse\SAS Struc\RFI\SAS RFI 793-Completed AS shts. see CCO 42S1\86s2.dgn

DATE PLOTTED => 2/11/2008 TIME PLOTTED => 10:37:17 AM
USERNAME => reyesl

*SF REQUEST

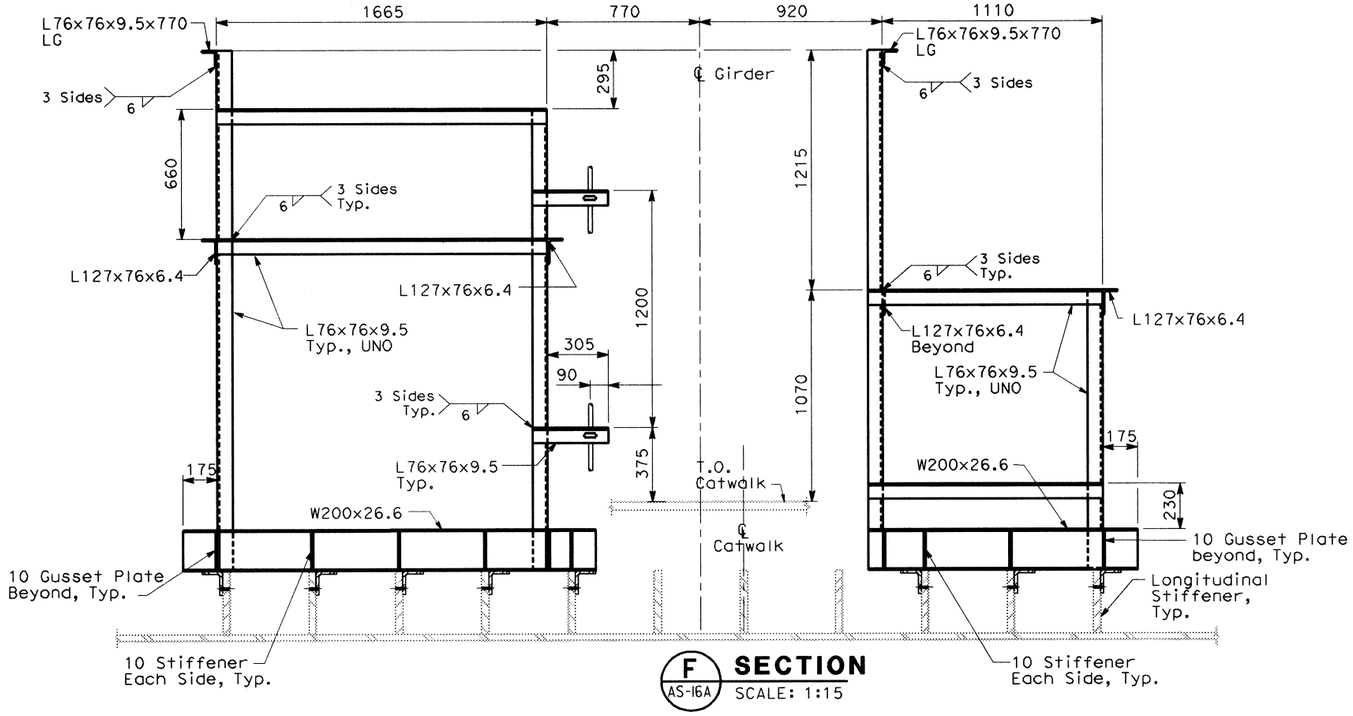

F AS-16A **SECTION**
SCALE: 1:15

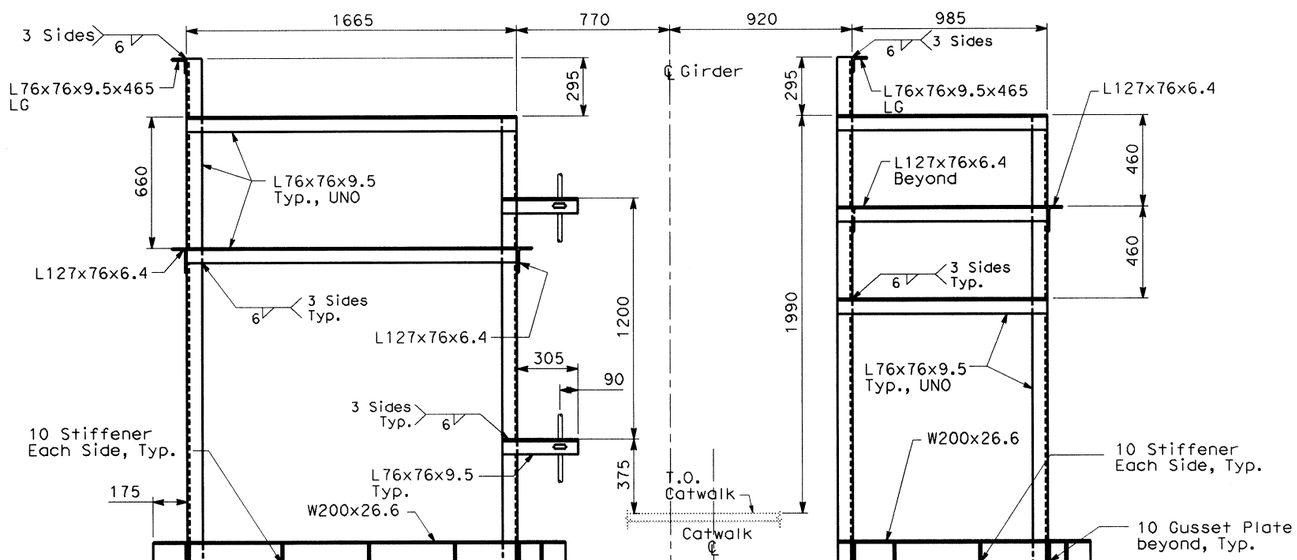

H AS-16A **SECTION**
SCALE: 1:15

ALL DIMENSIONS ARE IN MILLIMETERS UNLESS OTHERWISE SHOWN

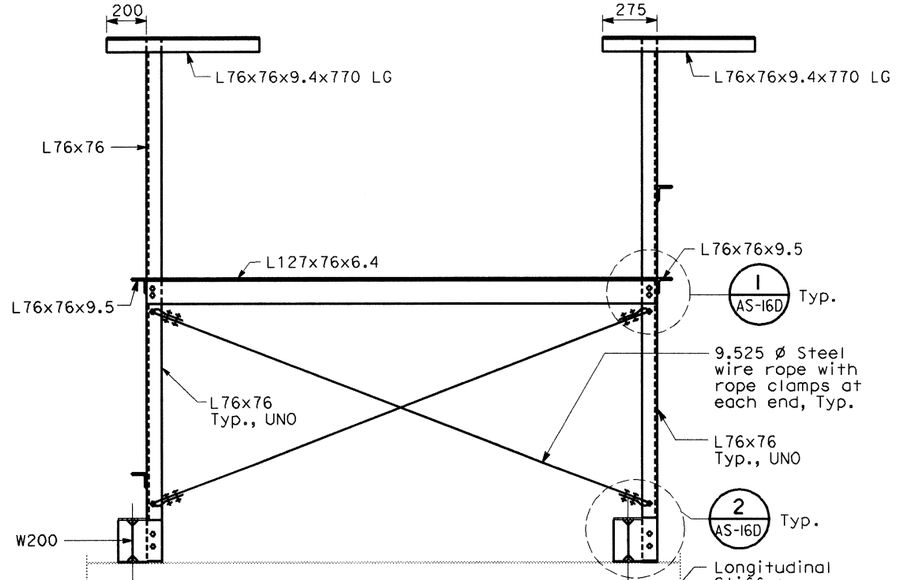

G AS-16A **SECTION**
SCALE: 1:15

RFI# 793 R00

NOTES:

1. For structural notes, see sheet AS-1.
2. For cable tray support locations, see electrical plans and dwgs AS-16K and AS-16R.

Caltrans Metric

DIST	COUNTY	ROUTE	KILOMETER POST TOTAL PROJECT	SHEET No	TOTAL SHEETS
04	SF	80	13.2/13.9	86S3C	1204

REGISTERED CIVIL ENGINEER

PLANS APPROVAL DATE

REGISTERED PROFESSIONAL ENGINEER — No. — Exp. — CIVIL — STATE OF CALIFORNIA

The State of California or its officers or agents shall not be responsible for the accuracy or completeness of electronic copies of this plan sheet.

Parsons Brinckerhoff Quade & Douglas, Inc.
303 Second Street, Suite 700N
San Francisco, CA 94107

Caltrans now has a web site! To get to the web site, go to: http://www.dot.ca.gov

Bob Zandipour
DESIGN OVERSIGHT

SIGN OFF DATE

	BY	CHECKED
DESIGN	L. Johnson	M. S. Owyang
DETAILS	A. Antonio	L. Johnson
QUANTITIES	L. Johnson	P. McNamee

PREPARED FOR THE STATE OF CALIFORNIA
DEPARTMENT OF TRANSPORTATION

Brady Nadell
PROJECT ENGINEER

BRIDGE NO. 34-0006
KILOMETER POST 13.2/13.9

SAS SUPERSTRUCTURE
WESTBOUND CABLE TRAY SUPPORT DETAILS AT PP 9 AND PP 10 - SHEET 3 OF 4

AS-16C

DESIGN DETAIL SHEET (METRIC) (REV. 3/1/98)

ORIGINAL SCALE IN MILLIMETERS FOR REDUCED PLANS 0 10 20 30 40 50 60 70 80 90 100

CU 04251
EA 0120F1

DISREGARD PRINTS BEARING EARLIER REVISION DATES

REVISION DATES (PRELIMINARY STAGE ONLY) | SHEET | OF

FILE => f:\13103\MS\pse\SAS Struc\RFI\SAS RFI 793-Completed AS shts. see CCO 42S1\86S3.dgn

USERNAME => kurnovsko DATE PLOTTED => 2/8/2008 TIME PLOTTED => 1:20:06 PM

$FREQUEST

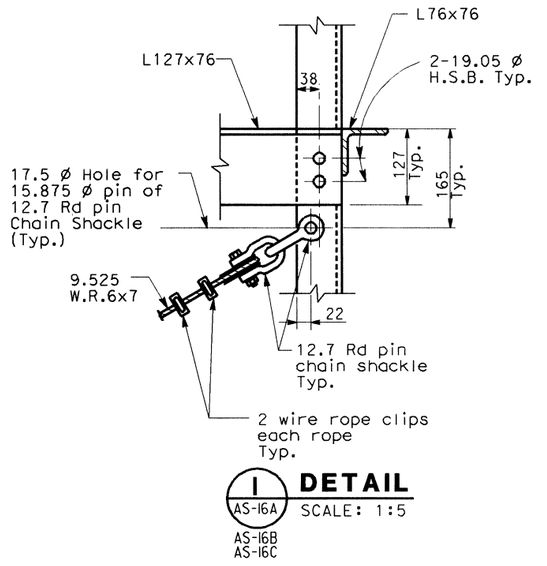

I AS-16A **DETAIL** SCALE: 1:5

AS-16B
AS-16C

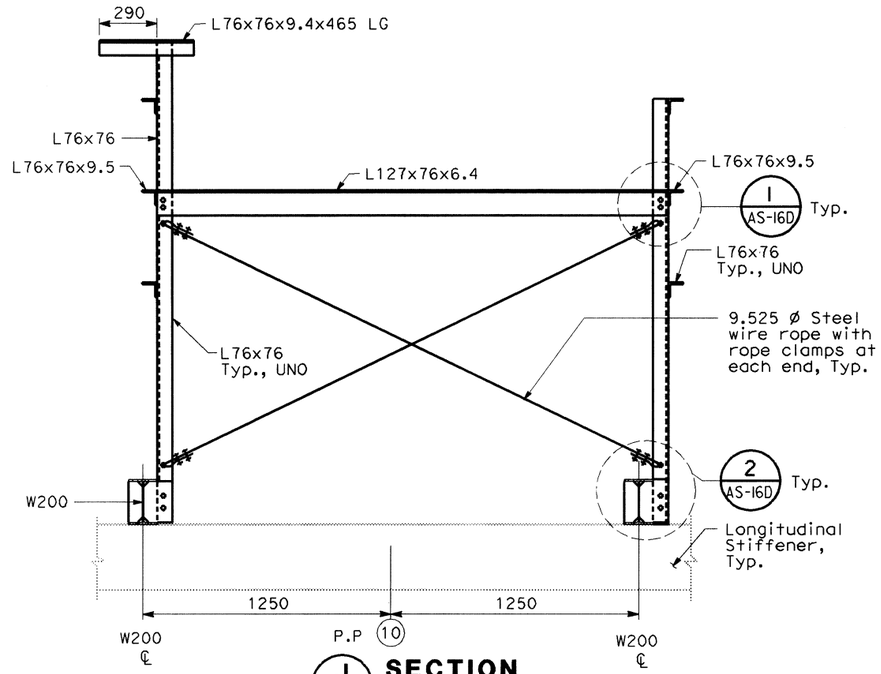

J AS-16A **SECTION** SCALE: 1:15

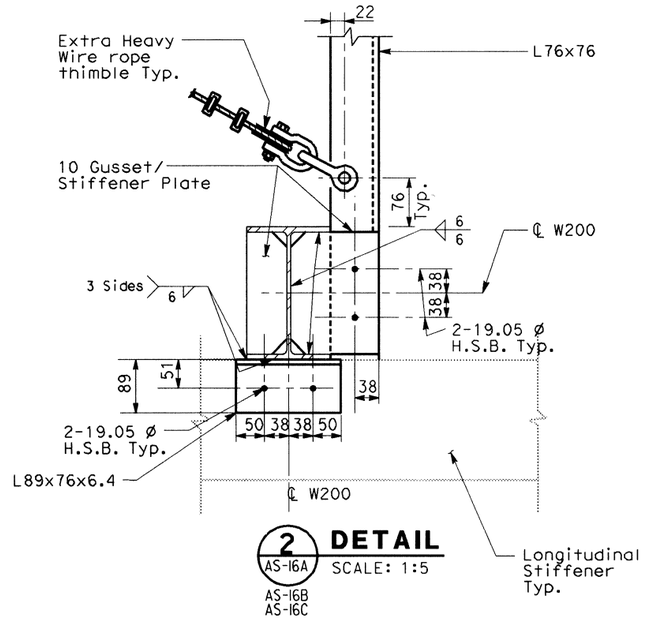

2 AS-16A **DETAIL** SCALE: 1:5

AS-16B
AS-16C

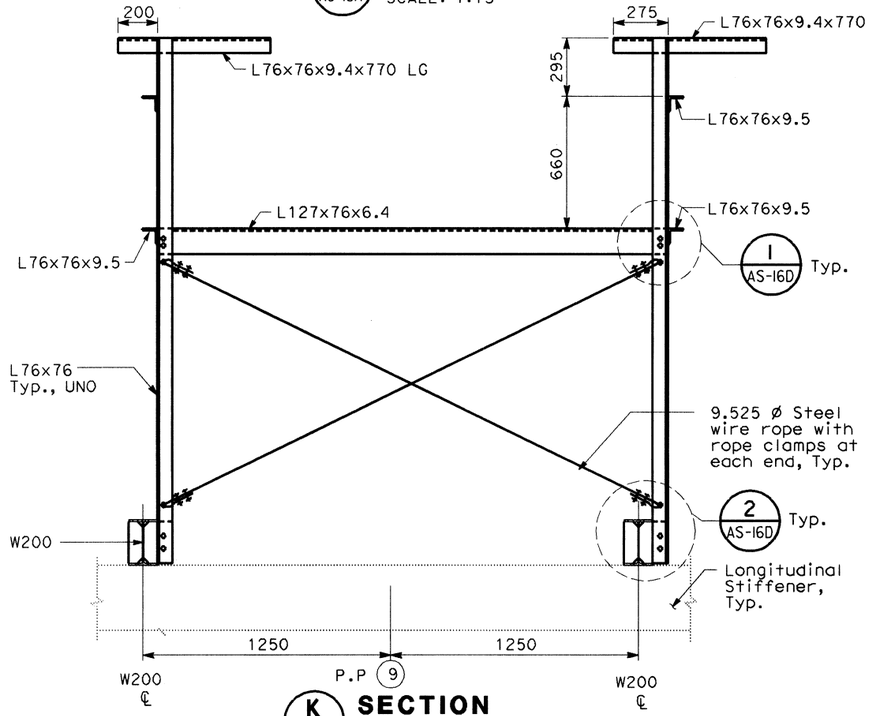

K AS-16A **SECTION** SCALE: 1:15

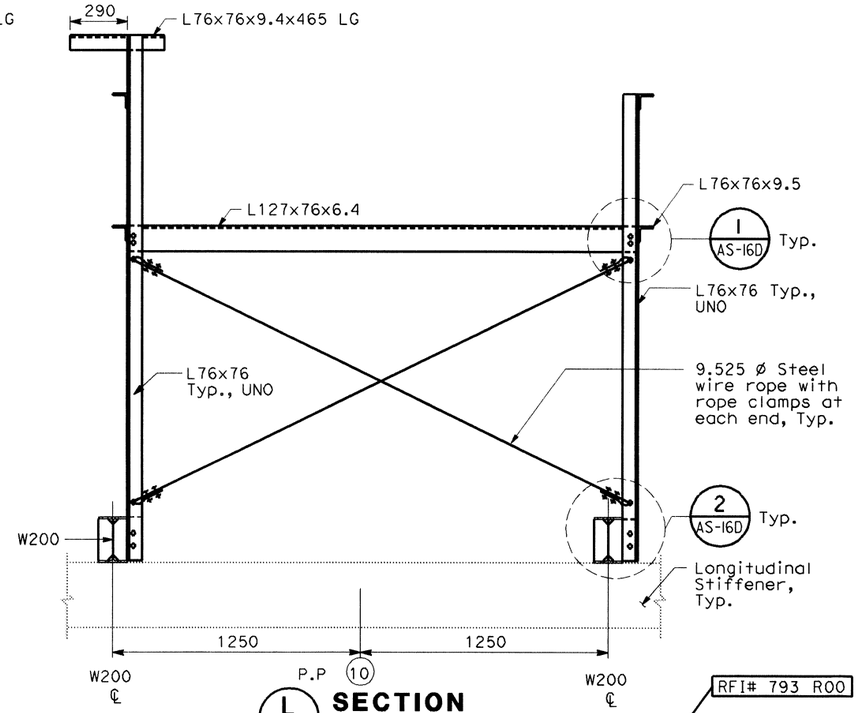

L AS-16A **SECTION** SCALE: 1:15

RFI# 793 R00

ALL DIMENSIONS ARE IN
MILLIMETERS UNLESS OTHERWISE SHOWN

Caltrans Metric

DIST	COUNTY	ROUTE	KILOMETER POST TOTAL PROJECT	SHEET No	TOTAL SHEETS
04	SF	80	13.2/13.9	86S4C	1204

REGISTERED CIVIL ENGINEER

PLANS APPROVAL DATE

REGISTERED PROFESSIONAL ENGINEER — No. Exp. CIVIL — STATE OF CALIFORNIA

The State of California or its officers or agents shall not be responsible for the accuracy or completeness of electronic copies of this plan sheet.

Parsons Brinckerhoff Quade & Douglas, Inc.
303 Second Street, Suite 700N
San Francisco, CA 94107

Caltrans now has a web site! To get to the web site, go to: http://www.dot.ca.gov

NOTES:

1. For structural notes, see sheet AS-1.
2. For cable tray support locations, see electrical plans and dwgs. AS-16K and AS-16R.

Bob Zandipour
DESIGN OVERSIGHT

SIGN OFF DATE

	BY	CHECKED
DESIGN	L. Johnson	M. S. Owyang
DETAILS	A. Antonio	L. Johnson
QUANTITIES	L. Johnson	P. McNamee

PREPARED FOR THE
STATE OF CALIFORNIA
DEPARTMENT OF TRANSPORTATION

Brady Nadell
PROJECT ENGINEER

BRIDGE NO. 34-0006
KILOMETER POST 13.2/13.9

SAS SUPERSTRUCTURE

WESTBOUND CABLE TRAY SUPPORT DETAILS AT PP 9 AND PP 10 - SHEET 4 OF 4

AS-16D

DESIGN DETAIL SHEET (METRIC) (REV. 3/1/98)

ORIGINAL SCALE IN MILLIMETERS FOR REDUCED PLANS 0 10 20 30 40 50 60 70 80 90 100

CU 04251
EA 0120F1

DISREGARD PRINTS BEARING EARLIER REVISION DATES

REVISION DATES (PRELIMINARY STAGE ONLY)

SHEET OF

FILE => t:\13103\MS\pse\SAS Struc\RFI\SAS RFI 793-Completed AS shts. see CCO 42S1\86S4.dgn

USERNAME => kurnovska DATE PLOTTED => 2/8/2008 TIME PLOTTED => 1:15:12 PM

&F REQUEST

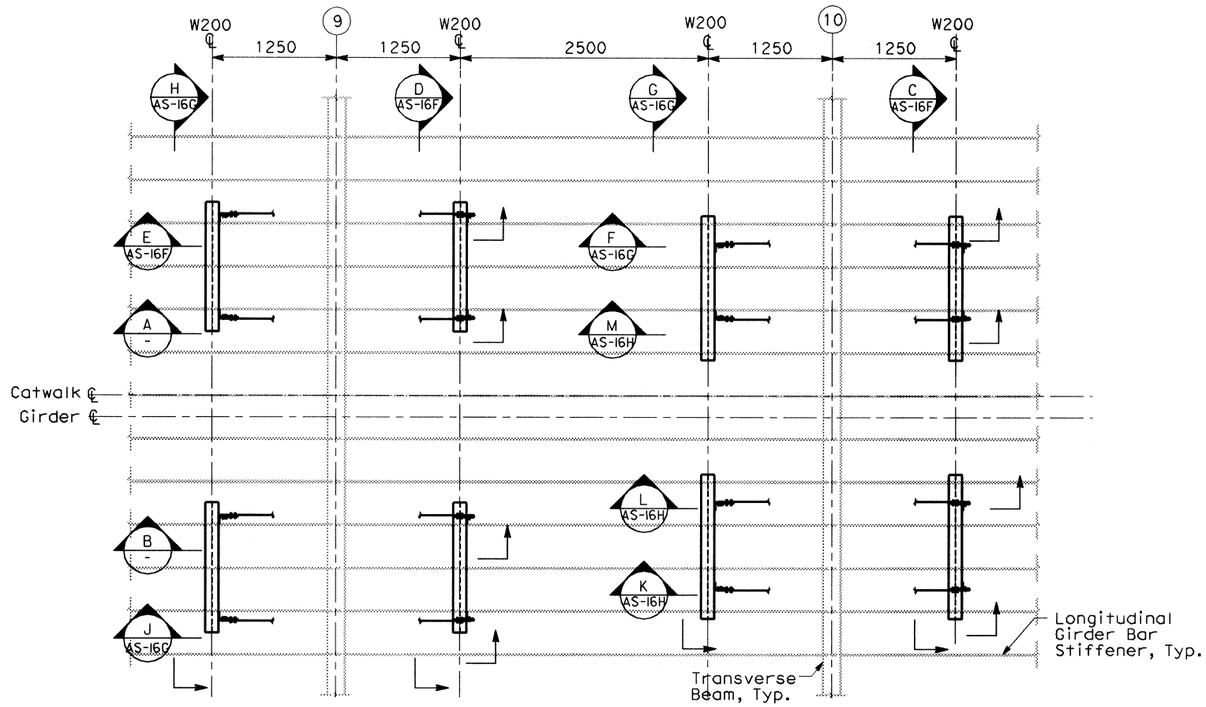

EASTBOUND CABLE SUPPORT PLAN - PANEL POINTS 9 AND 10

SCALE: 1:30

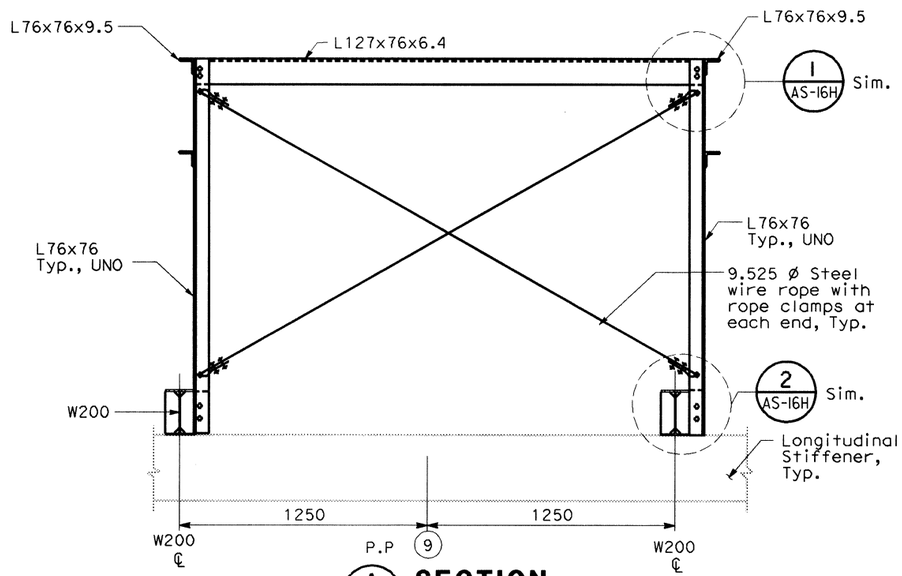

A - **SECTION**

SCALE: 1:15

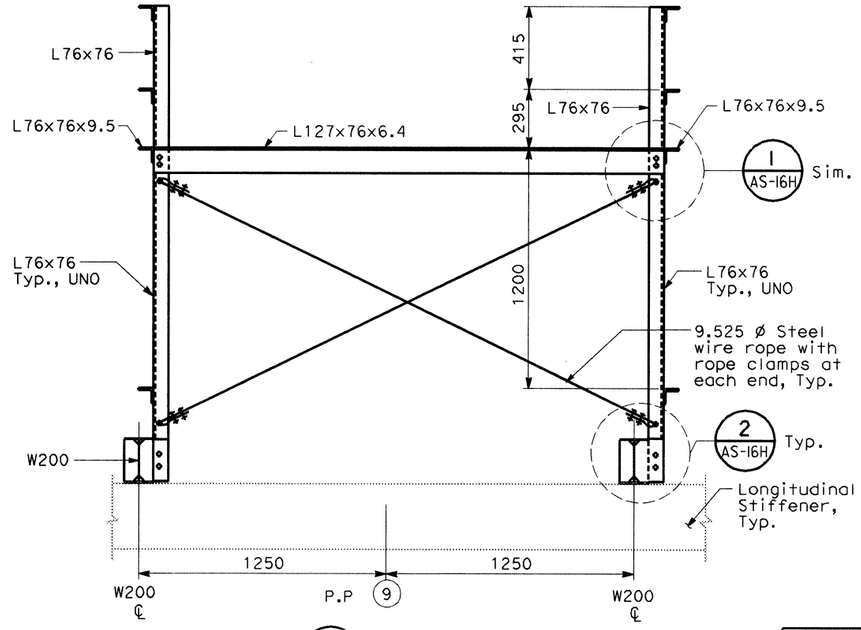

B - **SECTION**

SCALE: 1:15

ALL DIMENSIONS ARE IN
MILLIMETERS UNLESS OTHERWISE SHOWN

RFI# 793 R00

Caltrans Metric

DIST	COUNTY	ROUTE	KILOMETER POST TOTAL PROJECT	SHEET No	TOTAL SHEETS
04	SF	80	13.2/13.9	86S50	1204

REGISTERED CIVIL ENGINEER

REGISTERED PROFESSIONAL ENGINEER — NO. — Exp. — CIVIL — STATE OF CALIFORNIA

PLANS APPROVAL DATE

The State of California or its officers or agents shall not be responsible for the accuracy or completeness of electronic copies of this plan sheet.

Parsons Brinckerhoff Quade & Douglas, Inc.
303 Second Street, Suite 700N
San Francisco, CA 94107

Caltrans now has a web site! To get to the web site, go to: http://www.dot.ca.gov

NOTES:

1. For structural notes, see sheet AS-1.
2. For cable tray support locations, see electrical plans and dwgs AS-16K and AS-16R.

DESIGN	BY L. Johnson	CHECKED M. S. Owyang	PREPARED FOR THE STATE OF CALIFORNIA DEPARTMENT OF TRANSPORTATION
DETAILS	BY A. Antonio	CHECKED L. Johnson	
QUANTITIES	BY L. Johnson	CHECKED P. McNamee	

Bob Zandipour
DESIGN OVERSIGHT

SIGN OFF DATE

Brady Nadell
PROJECT ENGINEER

BRIDGE NO.	KILOMETER POST
34-0006	13.2/13.9

SAS SUPERSTRUCTURE

EASTBOUND CABLE TRAY SUPPORT DETAILS AT PP 9 AND PP 10 - SHEET 1 OF 4

AS-16E

REVISION DATES (PRELIMINARY STAGE ONLY) | SHEET

DISREGARD PRINTS BEARING EARLIER REVISION DATES

CU 04251
EA 0120F1

DESIGN DETAIL SHEET (METRIC) (REV. 3/1/98)

ORIGINAL SCALE IN MILLIMETERS FOR REDUCED PLANS 0 10 20 30 40 50 60 70 80 90 100

FILE => t:\13103\MS\pse\SAS Struc\RFI\SAS RFI 793-Completed AS shts. see CCO 42S1\86S5.dgn

$REQUEST

USERNAME => kurnovsk DATE PLOTTED => 2/8/2008 TIME PLOTTED => 1:46:19 PM

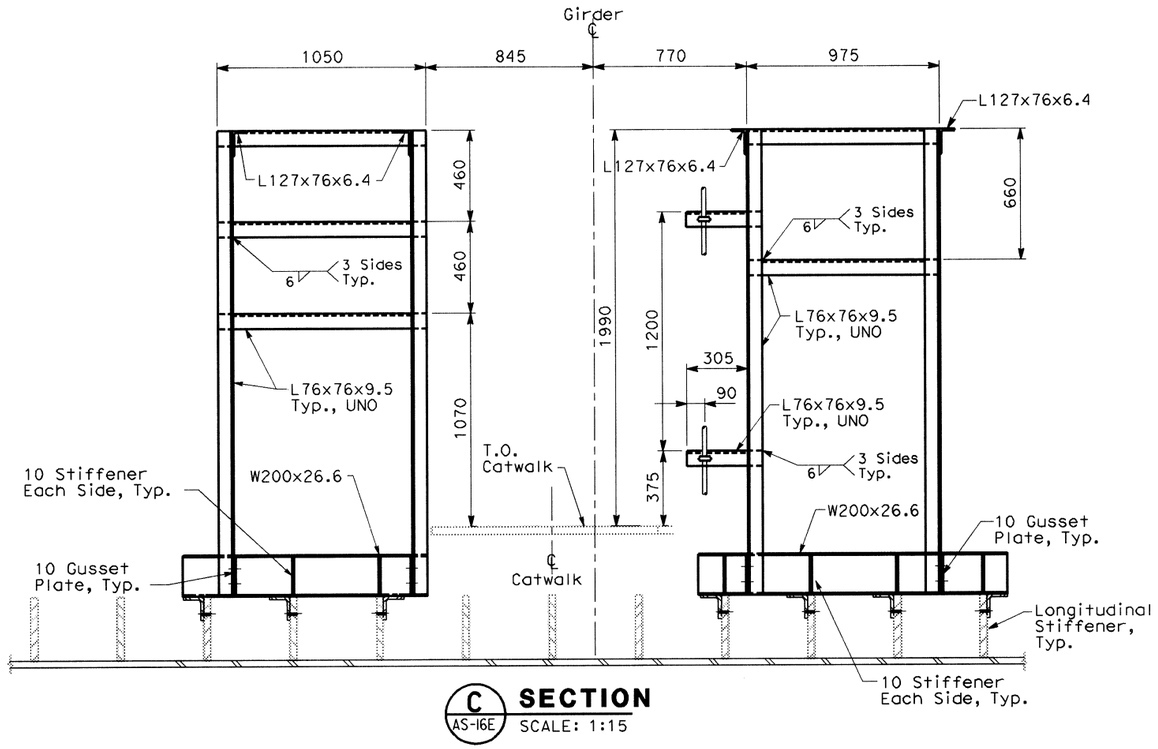

C AS-16E **SECTION**
SCALE: 1:15

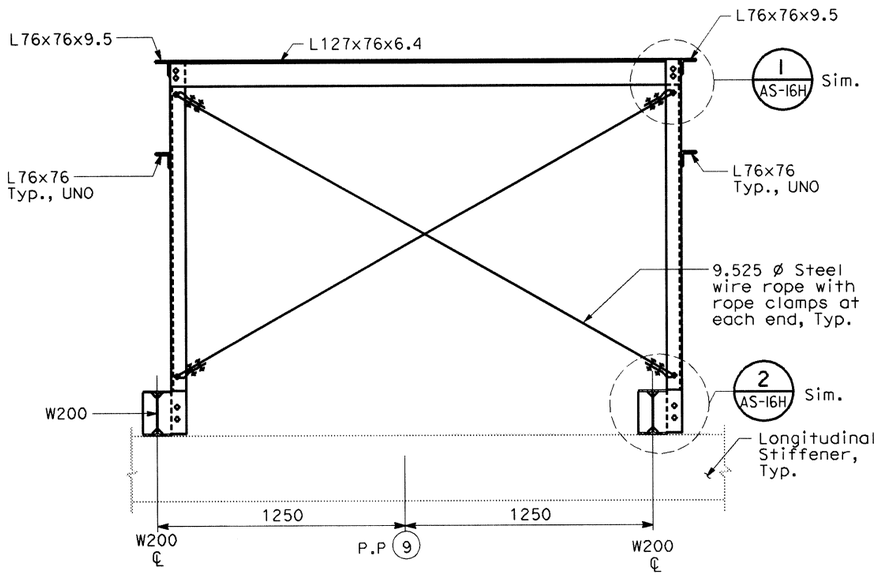

E AS-16E **SECTION**
SCALE: 1:15

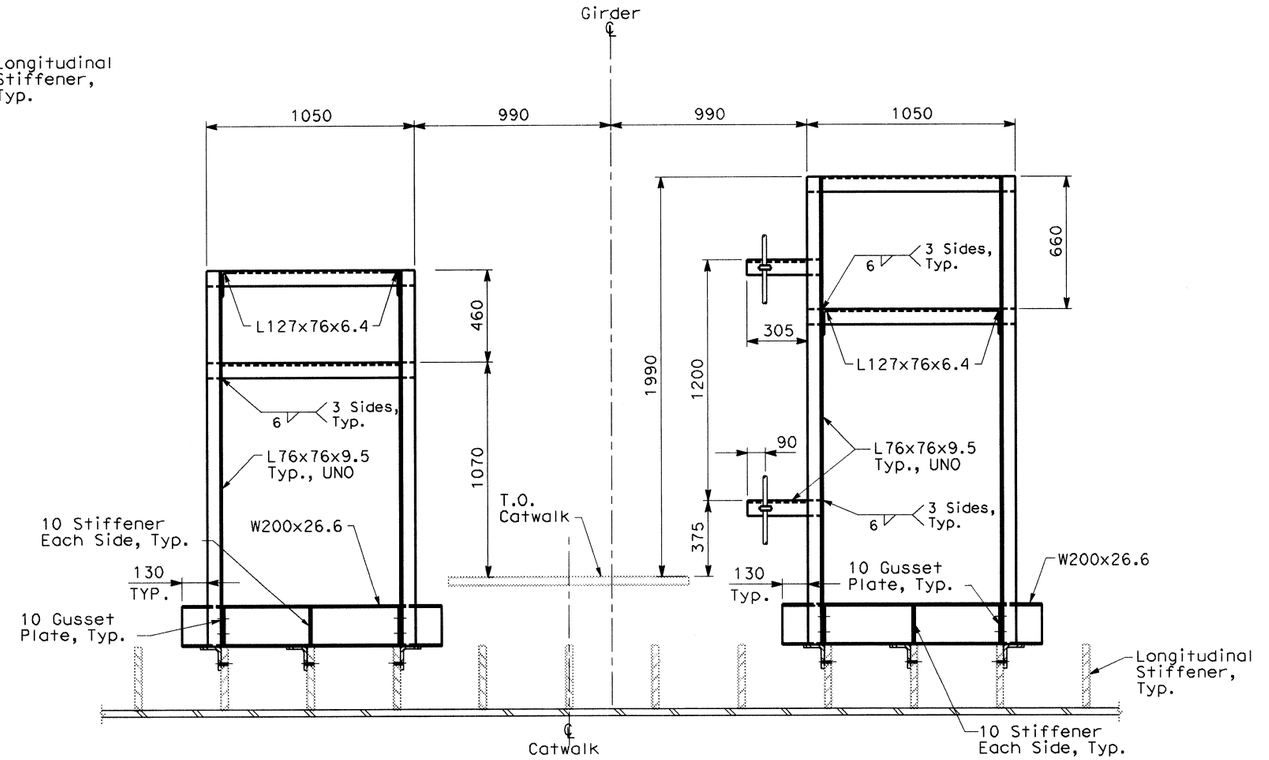

D AS-16E **SECTION**
SCALE: 1:15

NOTES:

1. For structural notes, see sheet AS-1.
2. For cable tray support locations, see electrical plans and dwgs AS-16K and AS-16R.

ALL DIMENSIONS ARE IN MILLIMETERS UNLESS OTHERWISE SHOWN

Caltrans Metric

DIST	COUNTY	ROUTE	KILOMETER POST TOTAL PROJECT	SHEET No	TOTAL SHEETS
04	SF	80	13.2/13.9	86S6C	1204

REGISTERED CIVIL ENGINEER

PLANS APPROVAL DATE

REGISTERED PROFESSIONAL ENGINEER No. Exp. CIVIL STATE OF CALIFORNIA

The State of California or its officers or agents shall not be responsible for the accuracy or completeness of electronic copies of this plan sheet.

Parsons Brinckerhoff Quade & Douglas, Inc.
303 Second Street, Suite 700N
San Francisco, CA 94107

Caltrans now has a web site! To get to the web site, go to: http://www.dot.ca.gov

RFI# 793 R00

Bob Zandipour, DESIGN OVERSIGHT	DESIGN	BY L. Johnson	CHECKED M. S. Owyang	PREPARED FOR THE STATE OF CALIFORNIA DEPARTMENT OF TRANSPORTATION
SIGN OFF DATE	DETAILS	BY A. Antonio	CHECKED L. Johnson	
	QUANTITIES	BY L. Johnson	CHECKED P. McNamee	

Brady Nadell, PROJECT ENGINEER

BRIDGE NO. 34-0006
KILOMETER POST 13.2/13.9

SAS SUPERSTRUCTURE

EASTBOUND - CABLE TRAY SUPPORT DETAILS AT PP 9 AND PP 10 - SHEET 2 OF 4

AS-16F

DESIGN DETAIL SHEET (METRIC) (REV. 3/1/98)

ORIGINAL SCALE IN MILLIMETERS FOR REDUCED PLANS 0 10 20 30 40 50 60 70 80 90 100

DISREGARD PRINTS BEARING EARLIER REVISION DATES

REVISION DATES (PRELIMINARY STAGE ONLY) | SHEET | OF

CU 04251
EA 0120F1

FILE => \\sfoc\project\13103\MS\pse\SAS Struc\RFI\SAS RFI 793-Completed AS shts. see CCO 42S1\86s6.dgn

$FREQUEST

DATE PLOTTED => 2/11/2008 TIME PLOTTED => 10:37:45 AM

USERNAME => Reyes

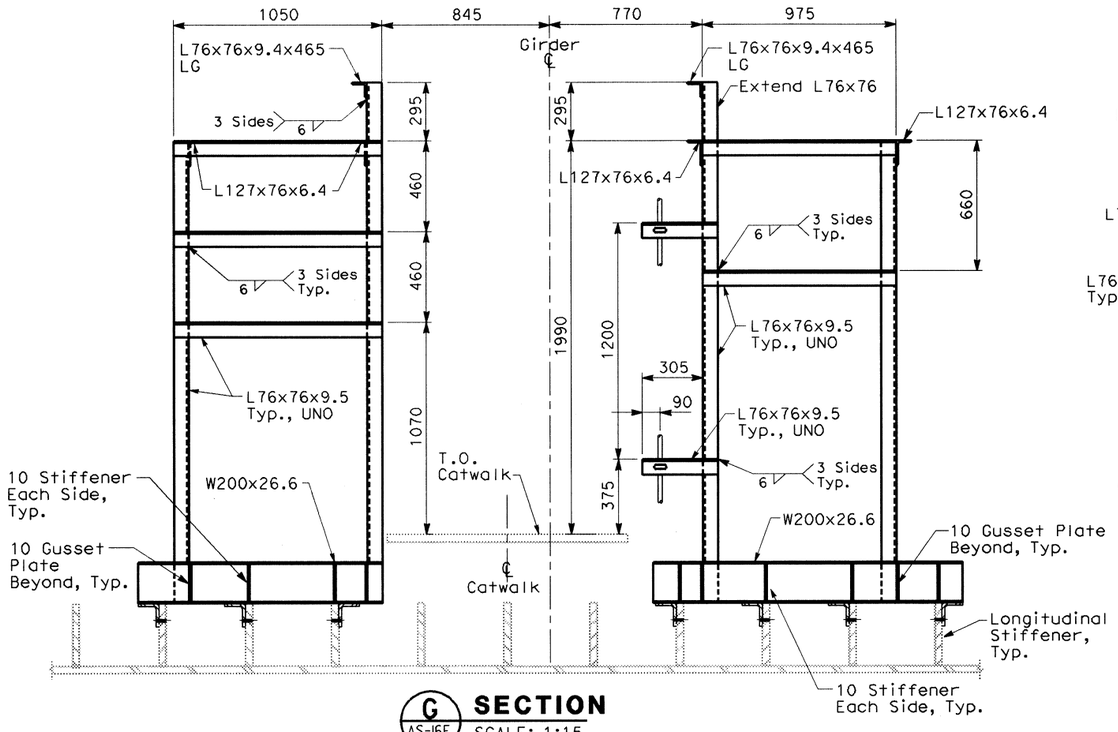

G SECTION AS-16E SCALE: 1:15

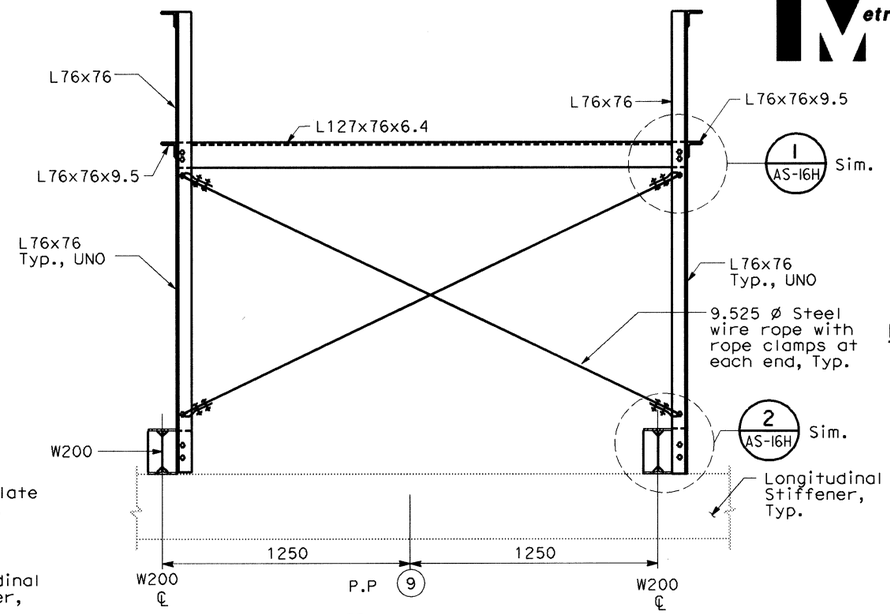

J SECTION AS-16E SCALE: 1:15

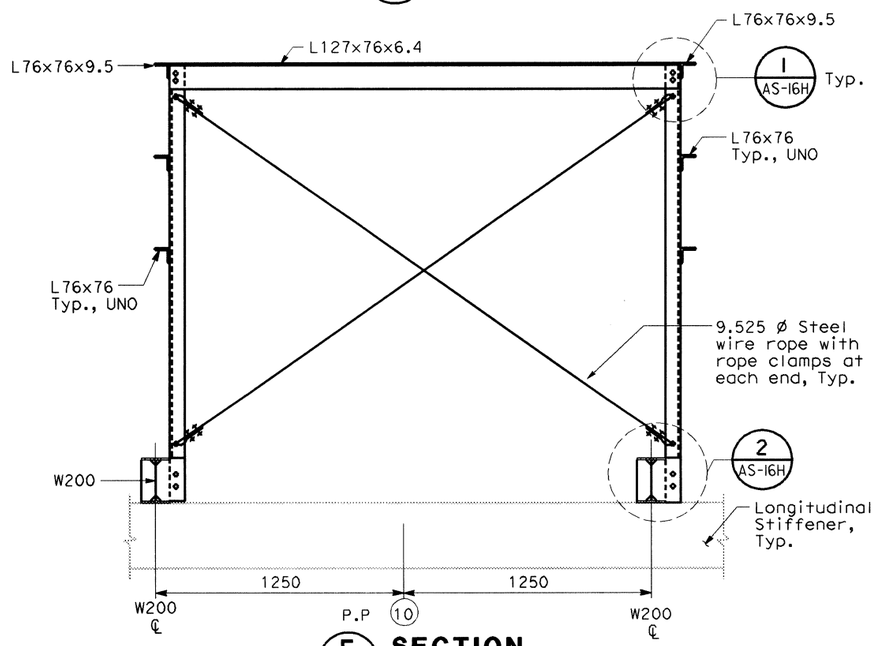

F SECTION AS-16E SCALE: 1:15

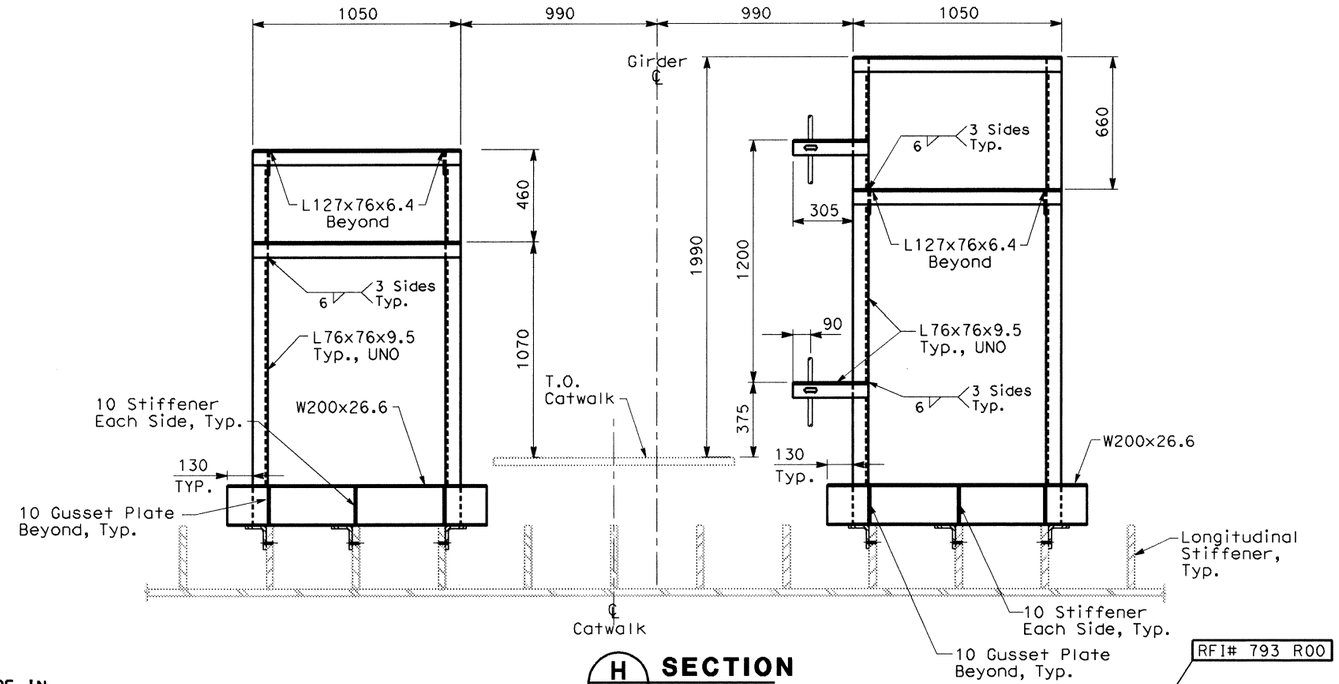

H SECTION AS-16E SCALE: 1:15

RFI# 793 R00

ALL DIMENSIONS ARE IN MILLIMETERS UNLESS OTHERWISE SHOWN

Caltrans Metric

DIST	COUNTY	ROUTE	KILOMETER POST TOTAL PROJECT	SHEET No	TOTAL SHEETS
04	SF	80	13.2/13.9	86S70	1204

REGISTERED CIVIL ENGINEER

PLANS APPROVAL DATE

REGISTERED PROFESSIONAL ENGINEER No. Exp. CIVIL STATE OF CALIFORNIA

The State of California or its officers or agents shall not be responsible for the accuracy or completeness of electronic copies of this plan sheet.

Parsons Brinckerhoff Quade & Douglas, Inc.
303 Second Street, Suite 700N
San Francisco, CA 94107

Caltrans now has a web site! To get to the web site, go to: http://www.dot.ca.gov

NOTES:

1. For structural notes, see sheet AS-1.
2. For cable tray support locations, see electrical plans and dwgs. AS-16K and AS-16R.

Bob Zandipour
DESIGN OVERSIGHT

SIGN OFF DATE

	BY	CHECKED
DESIGN	L. Johnson	M. S. Owyang
DETAILS	A. Antonio	L. Johnson
QUANTITIES	L. Johnson	P. McNamee

PREPARED FOR THE STATE OF CALIFORNIA DEPARTMENT OF TRANSPORTATION

Brady Nadell
PROJECT ENGINEER

BRIDGE NO. 34-0006
KILOMETER POST 13.2/13.9

SAS SUPERSTRUCTURE

EASTBOUND CABLE TRAY SUPPORT DETAILS AT PP 9 AND PP 10 - SHEET 3 OF 4

AS-16G

DESIGN DETAIL SHEET (METRIC) (REV. 3/1/98)

ORIGINAL SCALE IN MILLIMETERS FOR REDUCED PLANS 0 10 20 30 40 50 60 70 80 90 100

CU 04251
EA 0120F1

DISREGARD PRINTS BEARING EARLIER REVISION DATES

REVISION DATES (PRELIMINARY STAGE ONLY)

SHEET

FILE => t:\13103\MS\pse\SAS Struc\RFI\SAS RFI 793-Completed AS shts. see CCO 42S1\86S7.dgn

$FREQUEST

USERNAME => kurnovsko

DATE PLOTTED => 2/8/2008

TIME PLOTTED => 1:45:50 PM

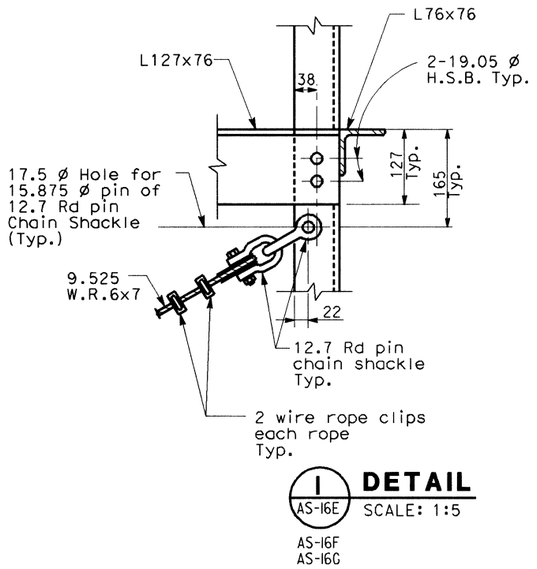

1 / AS-16E DETAIL SCALE: 1:5

AS-16F
AS-16G

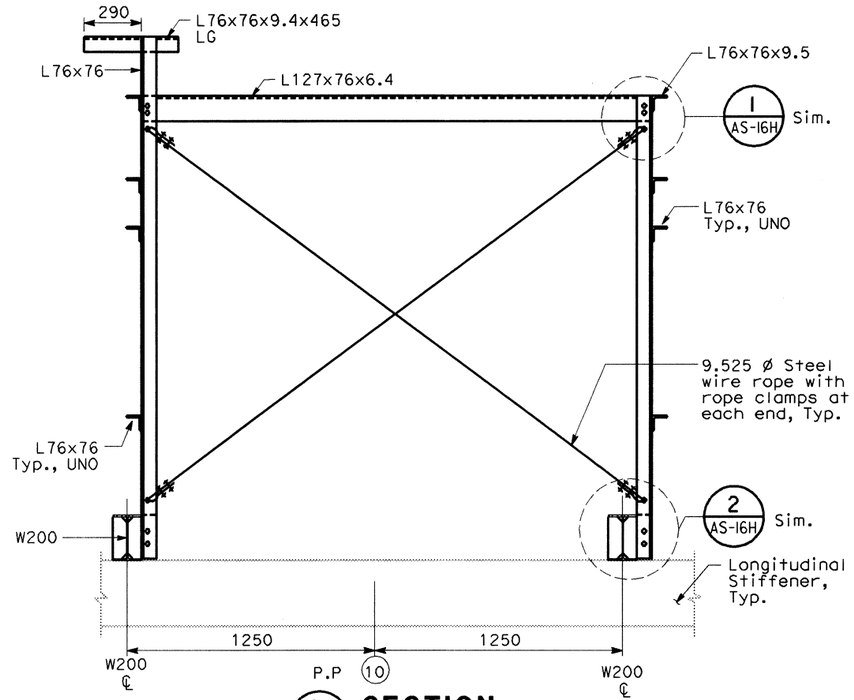

L / AS-16E SECTION SCALE: 1:15

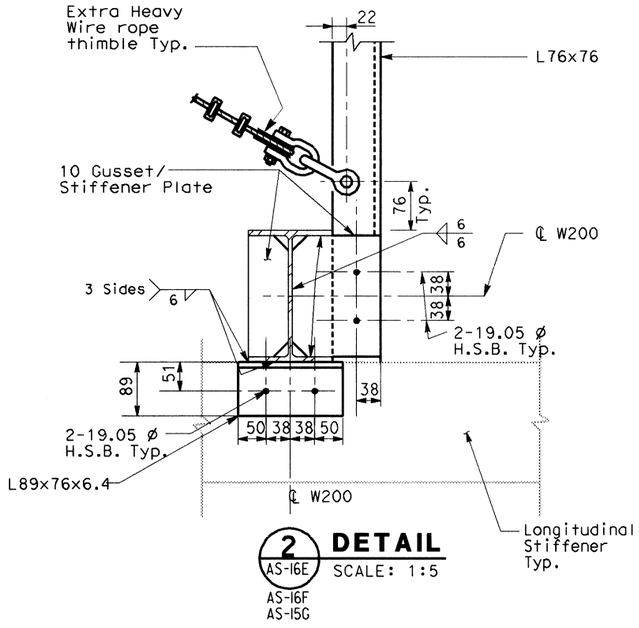

2 / AS-16E DETAIL SCALE: 1:5

AS-16F
AS-15G

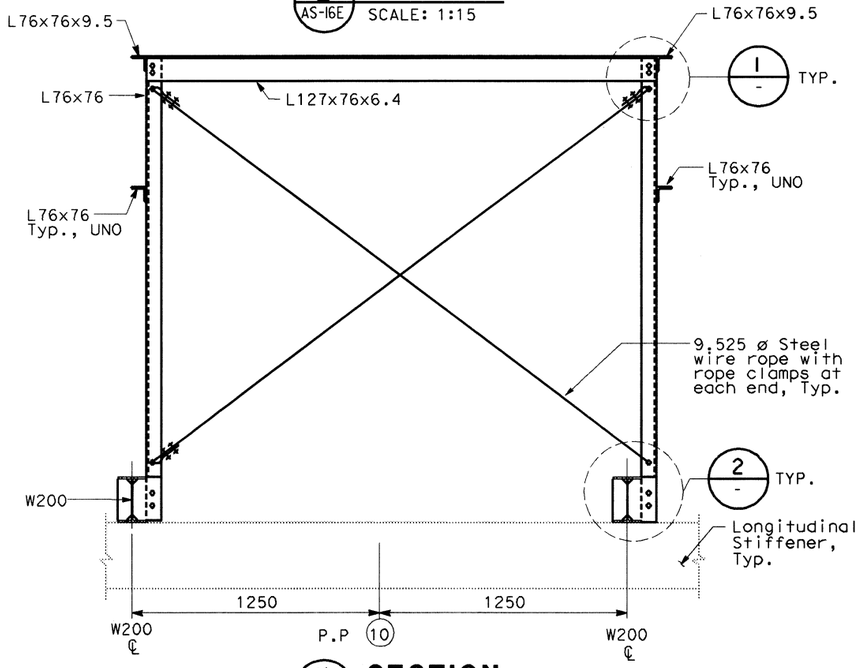

K / AS-16E SECTION SCALE: 1:15

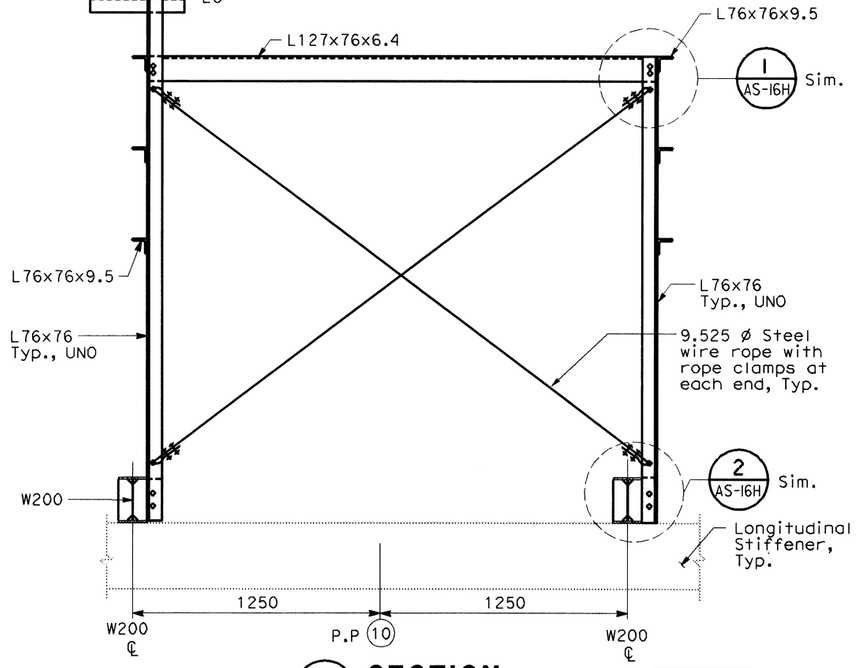

M / AS-16E SECTION SCALE: 1:15

RFI# 793 R00

ALL DIMENSIONS ARE IN
MILLIMETERS UNLESS OTHERWISE SHOWN

DIST	COUNTY	ROUTE	KILOMETER POST TOTAL PROJECT	SHEET No	TOTAL SHEETS
04	SF	80	13.2/13.9	86 S8C	1204

Caltrans Metric

REGISTERED CIVIL ENGINEER

PLANS APPROVAL DATE

REGISTERED PROFESSIONAL ENGINEER — NO. — Exp. — CIVIL — STATE OF CALIFORNIA

The State of California or its officers or agents shall not be responsible for the accuracy or completeness of electronic copies of this plan sheet.

Parsons Brinckerhoff Quade & Douglas, Inc.
303 Second Street, Suite 700N
San Francisco, CA 94107

Caltrans now has a web site! To get to the web site, go to: http://www.dot.ca.gov

NOTES:

1. For structural notes, see sheet AS-1.
2. For cable tray support locations, see electrical plans and dwgs. AS-16K and AS-16R.

Bob Zandipour
DESIGN OVERSIGHT

SIGN OFF DATE

	BY	CHECKED
DESIGN	L. Johnson	M. S. Owyang
DETAILS	A. Antonio	L. Johnson
QUANTITIES	L. Johnson	P. McNamee

PREPARED FOR THE
STATE OF CALIFORNIA
DEPARTMENT OF TRANSPORTATION

Brady Nadell
PROJECT ENGINEER

BRIDGE NO. 34-0006
KILOMETER POST 13.2/13.9

CU 04251
EA 0120F1

DISREGARD PRINTS BEARING EARLIER REVISION DATES

SAS SUPERSTRUCTURE

EASTBOUND CABLE TRAY SUPPORT DETAILS AT PP 9 AND PP 10 - SHEET 4 OF 4

AS-16H

REVISION DATES (PRELIMINARY STAGE ONLY)

SHEET OF

DESIGN DETAIL SHEET (METRIC) (REV. 3/1/98)

ORIGINAL SCALE IN MILLIMETERS FOR REDUCED PLANS 0 10 20 30 40 50 60 70 80 90 100

FILE => \\sfoc\project\13103\MS\pse\SAS Struc\RFI\SAS RFI 793-Completed AS shts. see CCO 42S1\86s8.dgn

USERNAME => reyesl DATE PLOTTED => 2/11/2008 TIME PLOTTED => 10:38:16 AM

*SF REQUEST

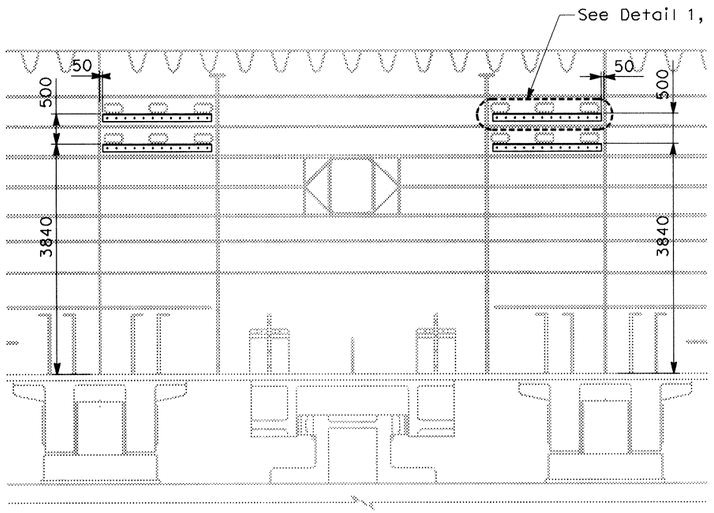

TYPE XI
Side E2 Web Plates
SCALE: 1:50

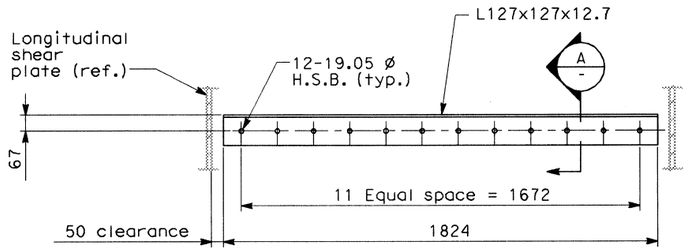

DETAIL 1
NO SCALE

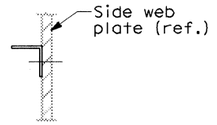

A / - SECTION
SCALE: None

NOTES:

1 For cable tray installation and layout, see sheets E-131 and E-220.

Caltrans Metric

DIST	COUNTY	ROUTE	KILOMETER POST TOTAL PROJECT	SHEET No	TOTAL SHEETS
04	SF	80	13.2/13.9	86 S9C	1204

REGISTERED CIVIL ENGINEER

PLANS APPROVAL DATE

REGISTERED PROFESSIONAL ENGINEER — NO. — EXP. — CIVIL — STATE OF CALIFORNIA

The State of California or its officers or agents shall not be responsible for the accuracy or completeness of electronic copies of this plan sheet.

Parsons Brinckerhoff Quade & Douglas, Inc.
303 Second Street, Suite 700N
San Francisco, CA 94107

Caltrans now has a web site! To get to the web site, go to: http://www.dot.ca.gov

ALL DIMENSIONS ARE IN MILLIMETERS UNLESS OTHERWISE SHOWN

RFI#919 R00

Bob Zandipour
DESIGN OVERSIGHT

SIGN OFF DATE

	BY	CHECKED
DESIGN	E. Sugiyama	M. S. Owyang
DETAILS	E. Sugiyama	M. S. Owyang
QUANTITIES	E. Sugiyama	M. S. Owyang

PREPARED FOR THE STATE OF CALIFORNIA DEPARTMENT OF TRANSPORTATION

Brady Nadell
PROJECT ENGINEER

BRIDGE NO. 34-0006
KILOMETER POST 13.2/13.9

SAS SUPERSTRUCTURE

CABLE TRAY SUPPORT DETAIL

AS-16J

SHEET OF

CU 04251
EA 0120F1

DISREGARD PRINTS BEARING EARLIER REVISION DATES

REVISION DATES (PRELIMINARY STAGE ONLY)

DESIGN DETAIL SHEET (METRIC) (REV. 3/1/98)

ORIGINAL SCALE IN MILLIMETERS FOR REDUCED PLANS 0 10 20 30 40 50 60 70 80 90 100

FILE => \\sfoc\project\13103\MS\pse\SAS Struc\RFI\SAS RFI 919\86S9.dgn

$FREQUEST

USERNAME => ncco DATE PLOTTED => 2/7/2008 TIME PLOTTED => 4:47:18 PM

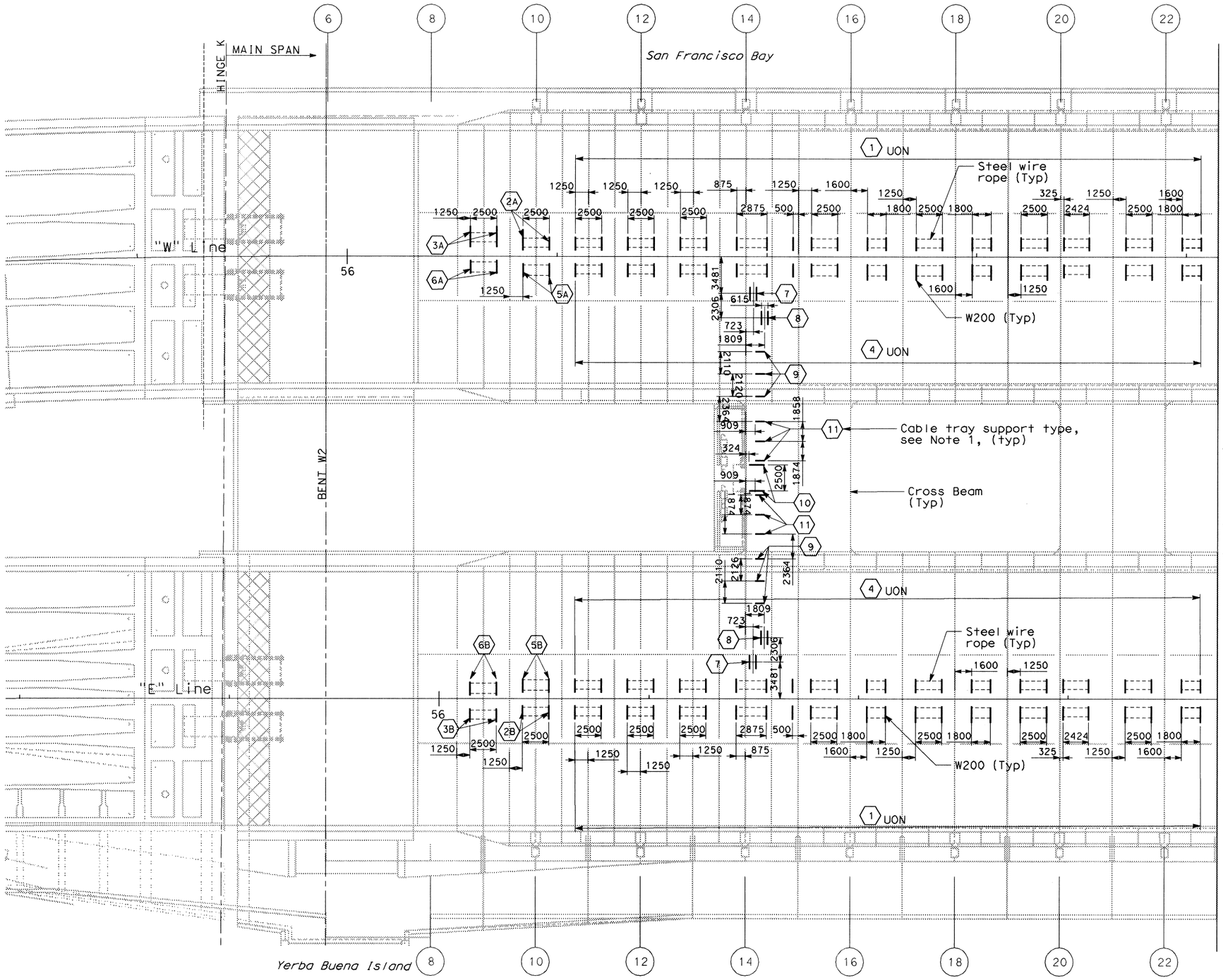

PLAN
SCALE: 1:200

ALL DIMENSIONS ARE IN MILLIMETERS UNLESS OTHERWISE SHOWN

Caltrans Metric

DIST	COUNTY	ROUTE	KILOMETER POST TOTAL PROJECT	SHEET No	TOTAL SHEETS
04	SF	80	13.2/13.9	86 S10C	1204

REGISTERED CIVIL ENGINEER

PLANS APPROVAL DATE

REGISTERED PROFESSIONAL ENGINEER — No. — Exp. — CIVIL — STATE OF CALIFORNIA

The State of California or its officers or agents shall not be responsible for the accuracy or completeness of electronic copies of this plan sheet.

Parsons Brinckerhoff Quade & Douglas, Inc.
303 Second Street, Suite 700N
San Francisco, CA 94107

Caltrans now has a web site! To get to the web site, go to: http://www.dot.ca.gov

NOTES:

1. For cable tray support type, see Table A sheet AS-16R.

RFI# 790	R00
RFI# 793	R00
RFI# 584	R00
RFI# 811	R01
RFI# 919	R00
RFI# 919	R01

Bob Zandipour
DESIGN OVERSIGHT

SIGN OFF DATE

	BY	CHECKED
DESIGN	J. Dones	M. S. Owyang
DETAILS	L. Reyes	J. Dones
QUANTITIES	J. Dones	P. Mcnamee

PREPARED FOR THE STATE OF CALIFORNIA DEPARTMENT OF TRANSPORTATION

Brady Nadell
PROJECT ENGINEER

CU 04251
EA 0120F1

BRIDGE NO. 34-0006
KILOMETER POST 13.2/13.9

SAS SUPERSTRUCTURE
OVERALL CABLE TRAY SUPPORT LOCATION PLAN HINGE K TO PP 22 - SHEET 1 OF 6

AS-16K

DESIGN DETAIL SHEET (METRIC) (REV. 3/1/98)

ORIGINAL SCALE IN MILLIMETERS FOR REDUCED PLANS 0 10 20 30 40 50 60 70 80 90 100

DISREGARD PRINTS BEARING EARLIER REVISION DATES

REVISION DATES (PRELIMINARY STAGE ONLY)

SHEET OF

$FREQUEST

USERNAME => reyesl DATE PLOTTED => 2/12/2008 TIME PLOTTED => 9:47:51 AM

FILE => \\sfoc\project\13103\MS\pse\SAS Struc\RFI\SAS RFI 919\86s10c.dgn

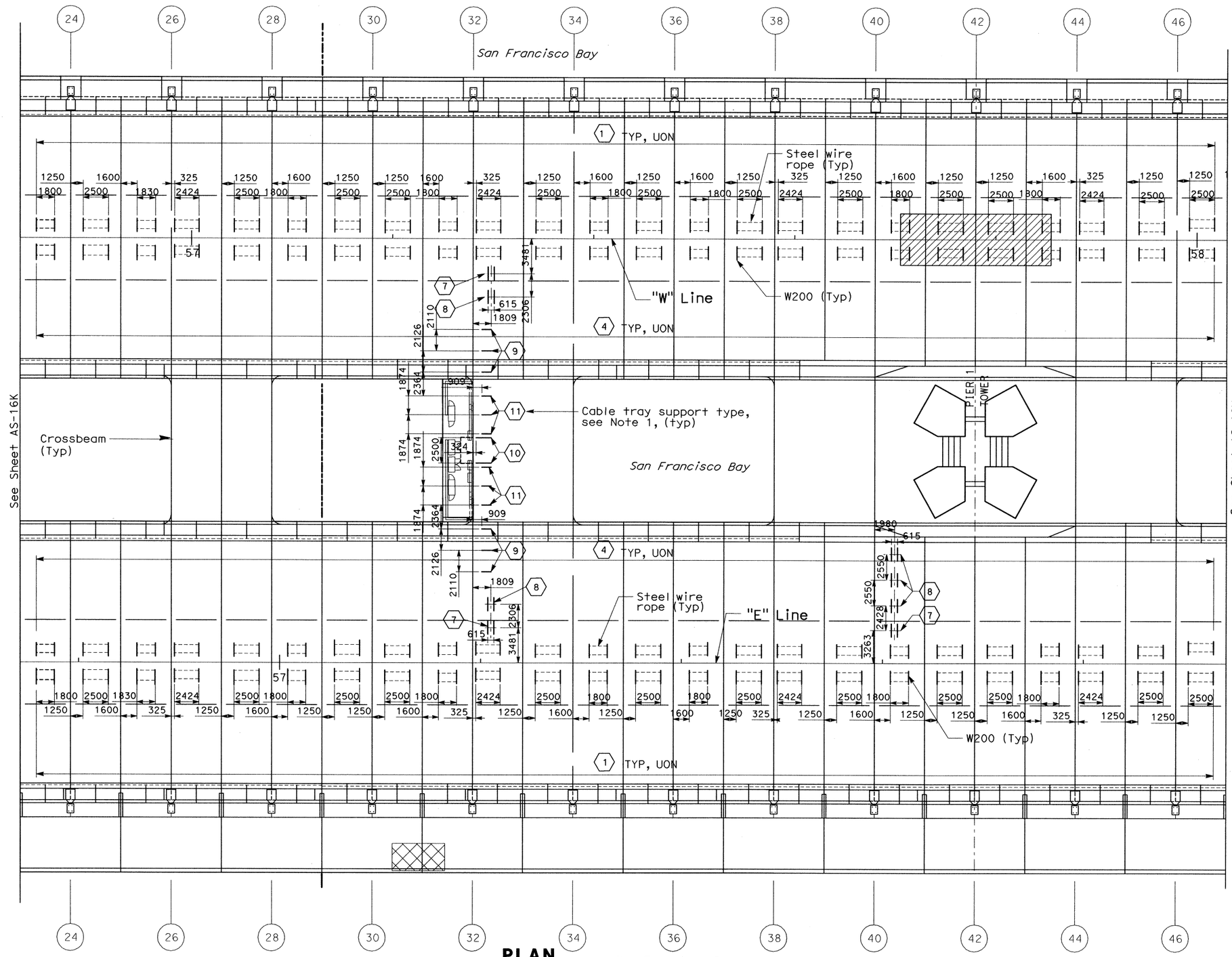

PLAN
SCALE: 1:200

ALL DIMENSIONS ARE IN MILLIMETERS UNLESS OTHERWISE SHOWN

Caltrans Metric

DIST	COUNTY	ROUTE	KILOMETER POST TOTAL PROJECT	SHEET No	TOTAL SHEETS
04	SF	80	13.2/13.9	86 S11C	1204

REGISTERED CIVIL ENGINEER

PLANS APPROVAL DATE

REGISTERED PROFESSIONAL ENGINEER — No. Exp. CIVIL — STATE OF CALIFORNIA

The State of California or its officers or agents shall not be responsible for the accuracy or completeness of electronic copies of this plan sheet.

Parsons Brinckerhoff Quade & Douglas, Inc.
303 Second Street, Suite 700N
San Francisco, CA 94107

Caltrans now has a web site! To get to the web site, go to: http://www.dot.ca.gov

NOTES:

1. For cable tray support type, see Table A sheet AS-16R.

RFI#	
857	R00
790	R00
584	R00
811	R01
919	R00
919	R01

Bob Zandipour, DESIGN OVERSIGHT			
SIGN OFF DATE			
DESIGN	BY J. Dones	CHECKED M. S. Owyang	PREPARED FOR THE STATE OF CALIFORNIA DEPARTMENT OF TRANSPORTATION
DETAILS	BY L. Reyes	CHECKED J. Dones	
QUANTITIES	BY J. Dones	CHECKED P. McNamee	
Brady Nadell, PROJECT ENGINEER			

BRIDGE NO. 34-0006
KILOMETER POST 13.2/13.9

CU 04251
EA 0120F1

DESIGN DETAIL SHEET (METRIC) (REV. 3/1/98)

ORIGINAL SCALE IN MILLIMETERS FOR REDUCED PLANS 0 10 20 30 40 50 60 70 80 90 100

DISREGARD PRINTS BEARING EARLIER REVISION DATES →

REVISION DATES (PRELIMINARY STAGE ONLY)

SAS SUPERSTRUCTURE

OVERALL CABLE TRAY SUPPORT LOCATION PLAN PP 23 TO PP 46 - SHEET 2 OF 6

AS-16L

SHEET OF

$FREQUEST

FILE => $REQUEST

USERNAME => $USER DATE PLOTTED => $DATE TIME PLOTTED => $TIME

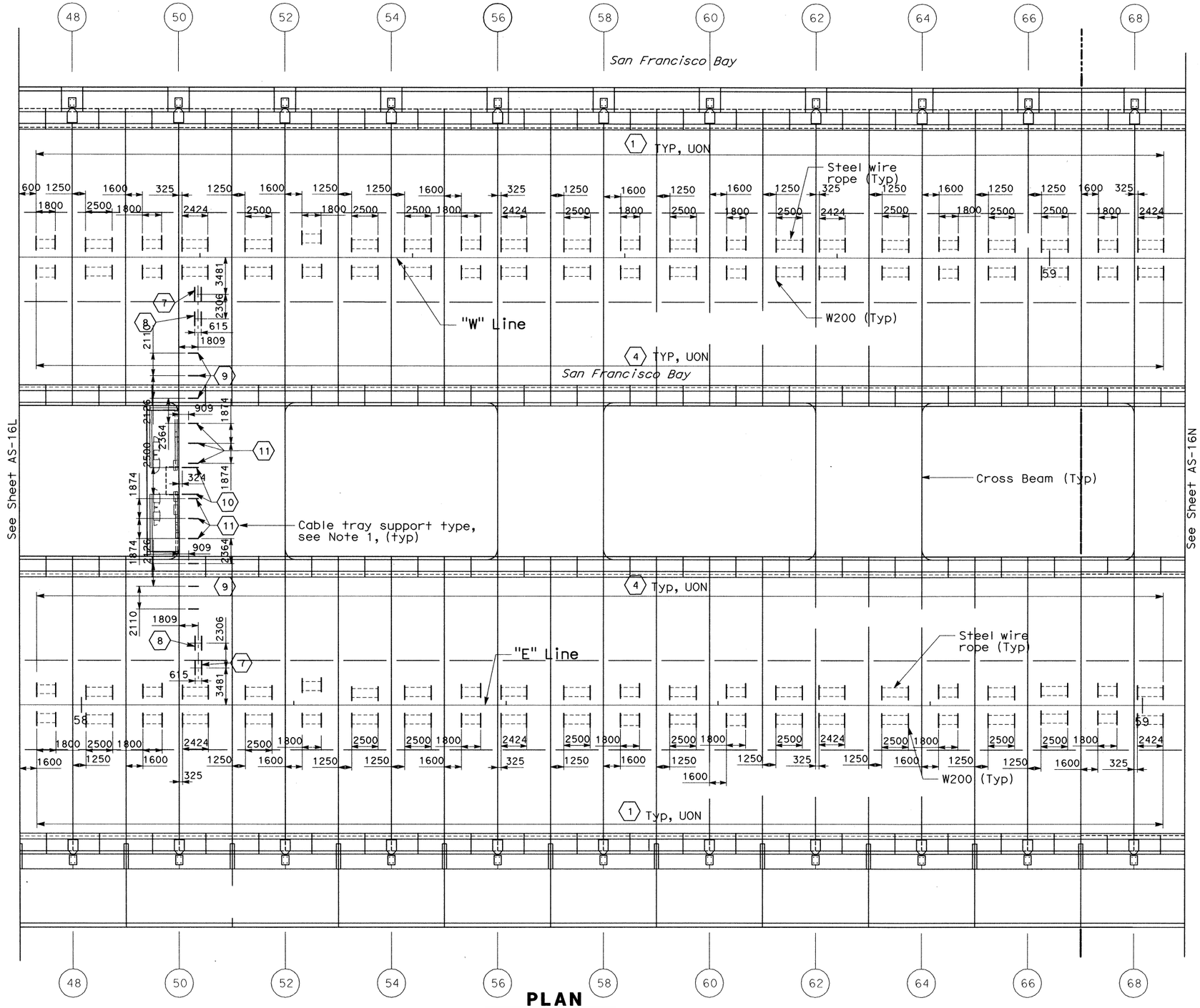

PLAN
SCALE: 1:200

ALL DIMENSIONS ARE IN MILLIMETERS UNLESS OTHERWISE SHOWN

Caltrans Metric

DIST	COUNTY	ROUTE	KILOMETER POST TOTAL PROJECT	SHEET No	TOTAL SHEETS
04	SF	80	13.2/13.9	86 S12C	1204

REGISTERED CIVIL ENGINEER

PLANS APPROVAL DATE

REGISTERED PROFESSIONAL ENGINEER — No. Exp. CIVIL — STATE OF CALIFORNIA

The State of California or its officers or agents shall not be responsible for the accuracy or completeness of electronic copies of this plan sheet.

Parsons Brinckerhoff Quade & Douglas, Inc.
303 Second Street, Suite 700N
San Francisco, CA 94107

Caltrans now has a web site! To get to the web site, go to: http://www.dot.ca.gov

NOTES:

1. For cable tray support type, see Table A sheet AS-16R.

RFI#790 R00
RFI#584 R00
RFI#811 R01
RFI#919 R00
RFI#919 R01

Bob Zandipour, DESIGN OVERSIGHT			
SIGN OFF DATE			
DESIGN	BY J. Dones	CHECKED M. S. Owyang	PREPARED FOR THE STATE OF CALIFORNIA DEPARTMENT OF TRANSPORTATION
DETAILS	BY L. Reyes	CHECKED J. Dones	
QUANTITIES	BY J. Dones	CHECKED P. McNamee	
Brady Nadell, PROJECT ENGINEER			

BRIDGE NO. 34-0006
KILOMETER POST 13.2/13.9
CU 04251
EA 0120F1

SAS SUPERSTRUCTURE

OVERALL CABLE TRAY SUPPORT LOCATION PLAN PP 47 TO PP 68 - SHEET 3 OF 6

AS-16M

DISREGARD PRINTS BEARING EARLIER REVISION DATES

REVISION DATES (PRELIMINARY STAGE ONLY)

SHEET OF

DESIGN DETAIL SHEET (METRIC) (REV. 3/1/98)

ORIGINAL SCALE IN MILLIMETERS FOR REDUCED PLANS 0 10 20 30 40 50 60 70 80 90 100

FILE => $REQUEST

$FREQUEST

USERNAME => $USER

DATE PLOTTED => $DATE

TIME PLOTTED => $TIME

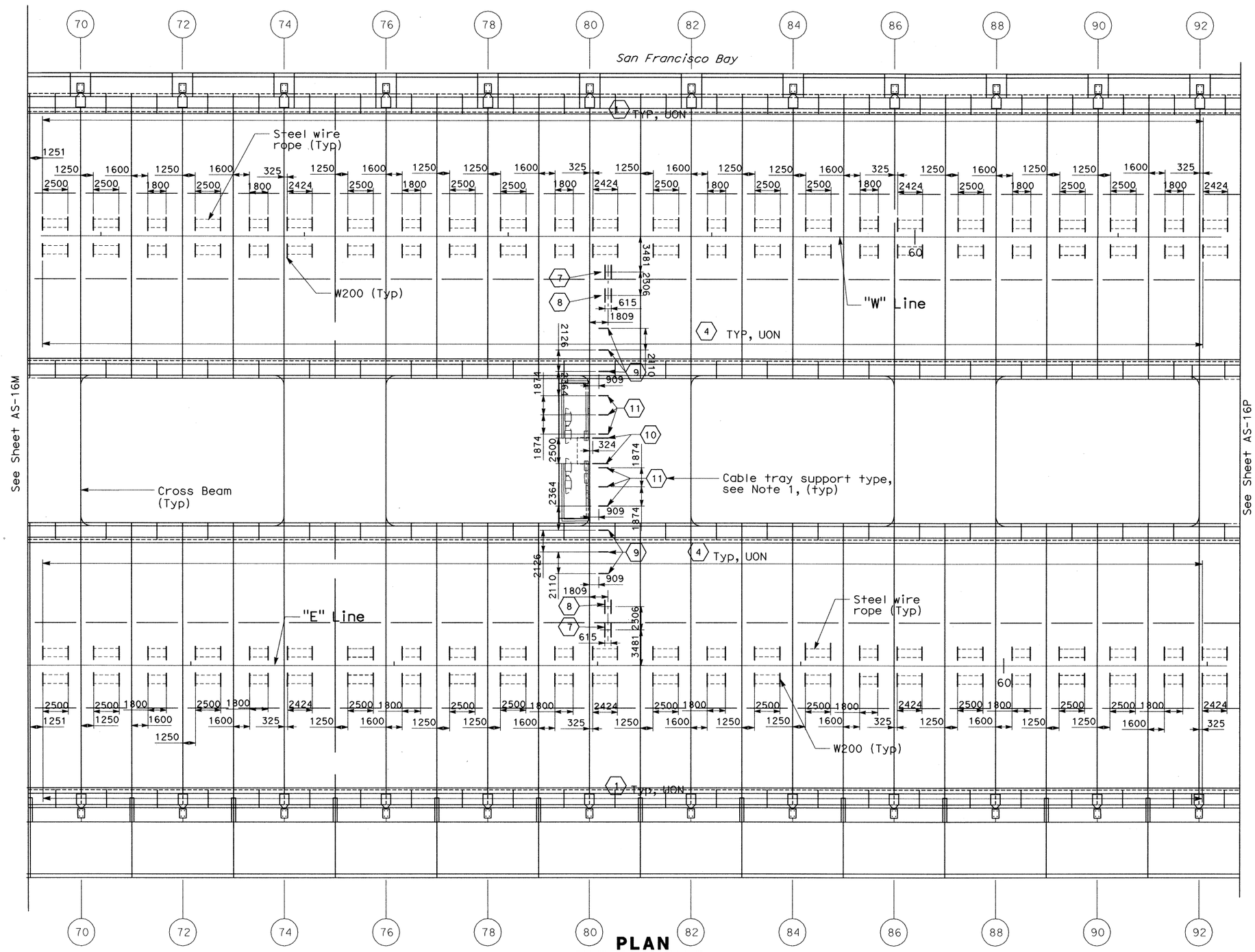

PLAN
SCALE: 1:200

ALL DIMENSIONS ARE IN MILLIMETERS UNLESS OTHERWISE SHOWN

Caltrans Metric

DIST	COUNTY	ROUTE	KILOMETER POST TOTAL PROJECT	SHEET No	TOTAL SHEETS
04	SF	80	13.2/13.9	86 S13C	1204

REGISTERED CIVIL ENGINEER

PLANS APPROVAL DATE

REGISTERED PROFESSIONAL ENGINEER — No. Exp. CIVIL — STATE OF CALIFORNIA

The State of California or its officers or agents shall not be responsible for the accuracy or completeness of electronic copies of this plan sheet.

Parsons Brinckerhoff Quade & Douglas, Inc.
303 Second Street, Suite 700N
San Francisco, CA 94107

Caltrans now has a web site! To get to the web site, go to: http://www.dot.ca.gov

NOTES:

1. For cable tray support type, see Table A sheet AS-16R.

RFI#790	R00	
RFI#584	R00	
RFI#811	R01	
RFI#919	R00	
RFI#919	R01	

Bob Zandipour
DESIGN OVERSIGHT

SIGN OFF DATE

DESIGN	BY J. Dones	CHECKED M. S. Owyang	
DETAILS	BY L. Reyes	CHECKED J. Dones	
QUANTITIES	BY J. Dones	CHECKED P. McNamee	

PREPARED FOR THE STATE OF CALIFORNIA
DEPARTMENT OF TRANSPORTATION

Brady Nadell
PROJECT ENGINEER

CU 04251
EA 0120F1

BRIDGE NO.	34-0006
KILOMETER POST	13.2/13.9

SAS SUPERSTRUCTURE

OVERALL CABLE TRAY SUPPORT LOCATION PLAN PP 69 TO PP 92 - SHEET 4 OF 6

AS-16N

DISREGARD PRINTS BEARING EARLIER REVISION DATES

REVISION DATES (PRELIMINARY STAGE ONLY)

SHEET OF

DESIGN DETAIL SHEET (METRIC) (REV. 3/1/98)

ORIGINAL SCALE IN MILLIMETERS FOR REDUCED PLANS 0 10 20 30 40 50 60 70 80 90 100

FILE => $REQUEST

$FREQUEST

USERNAME => $USER DATE PLOTTED => $DATE TIME PLOTTED => $TIME

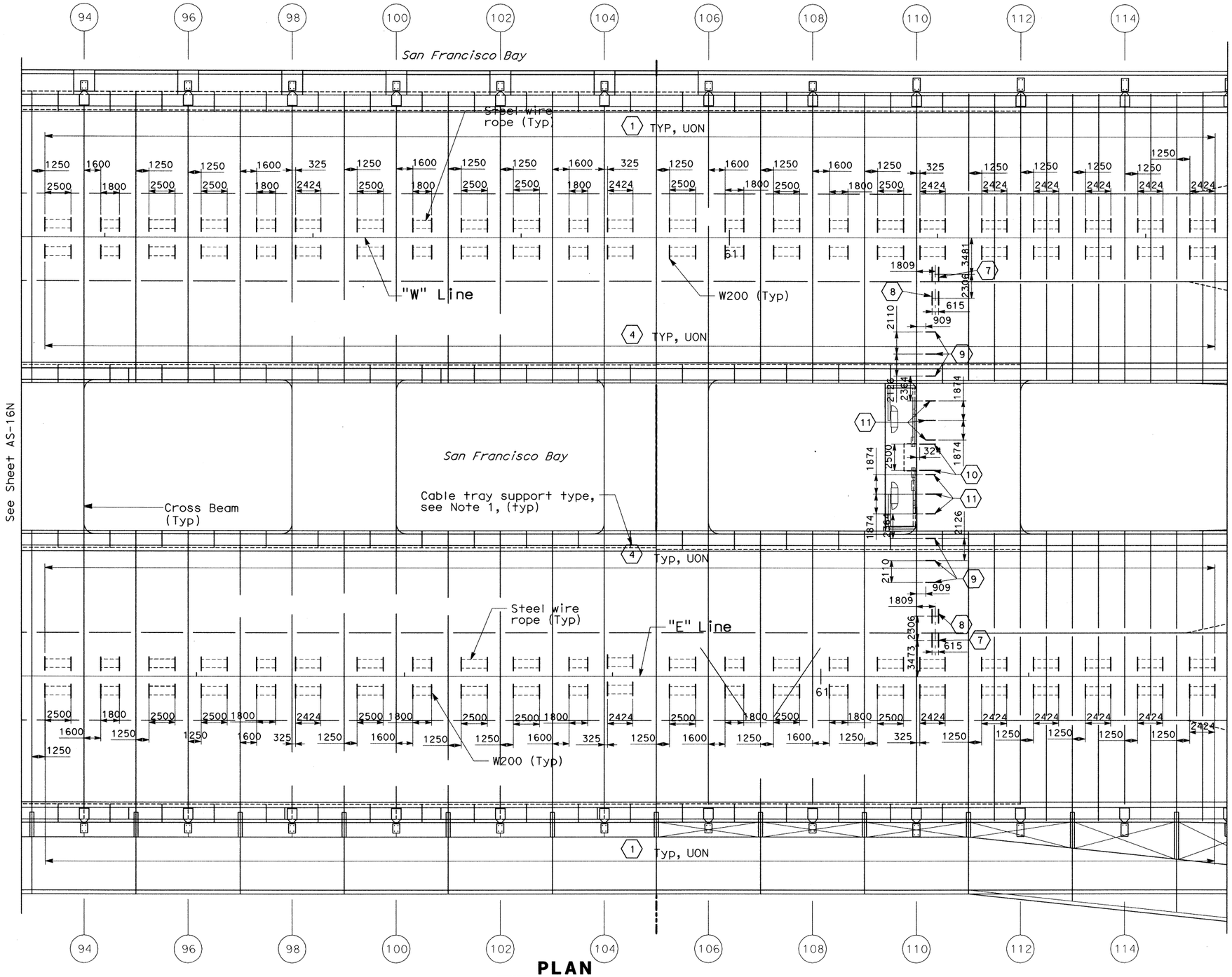

PLAN
SCALE: 1:200

NOTES:

1. For cable tray support type, see Table A sheet AS-16R.

ALL DIMENSIONS ARE IN MILLIMETERS UNLESS OTHERWISE SHOWN

RFI#790 R00
RFI#584 R00
RFI#811 R01
RFI#919 R00
RFI#919 R01

DIST	COUNTY	ROUTE	KILOMETER POST TOTAL PROJECT	SHEET No	TOTAL SHEETS
04	SF	80	13.2/13.9	86 S14C	1204

REGISTERED CIVIL ENGINEER

PLANS APPROVAL DATE

REGISTERED PROFESSIONAL ENGINEER — No. — Exp. — CIVIL — STATE OF CALIFORNIA

The State of California or its officers or agents shall not be responsible for the accuracy or completeness of electronic copies of this plan sheet.

Parsons Brinckerhoff Quade & Douglas, Inc.
303 Second Street, Suite 700N
San Francisco, CA 94107

Caltrans now has a web site! To get to the web site, go to: http://www.dot.ca.gov

Bob Zandipour
DESIGN OVERSIGHT

SIGN OFF DATE

	BY	CHECKED
DESIGN	D. Dones	M. S. Owyang
DETAILS	L. Reyes	J. Dones
QUANTITIES	J. Dones	P. McNamee

PREPARED FOR THE STATE OF CALIFORNIA
DEPARTMENT OF TRANSPORTATION

Brady Nadell
PROJECT ENGINEER

CU 04251
EA 0120F1

BRIDGE NO. 34-0006
KILOMETER POST 13.2/13.9

SAS SUPERSTRUCTURE

OVERALL CABLE TRAY SUPPORT LOCATION PLAN PP 93 TO PP 115 - SHEET 5 OF 6

AS-16P

DISREGARD PRINTS BEARING EARLIER REVISION DATES

REVISION DATES (PRELIMINARY STAGE ONLY)

SHEET OF

DESIGN DETAIL SHEET (METRIC) (REV. 3/1/98)

ORIGINAL SCALE IN MILLIMETERS FOR REDUCED PLANS 0 10 20 30 40 50 60 70 80 90 100

FILE => $REQUEST

$REQUEST

USERNAME => $USER DATE PLOTTED => $DATE TIME PLOTTED => $TIME

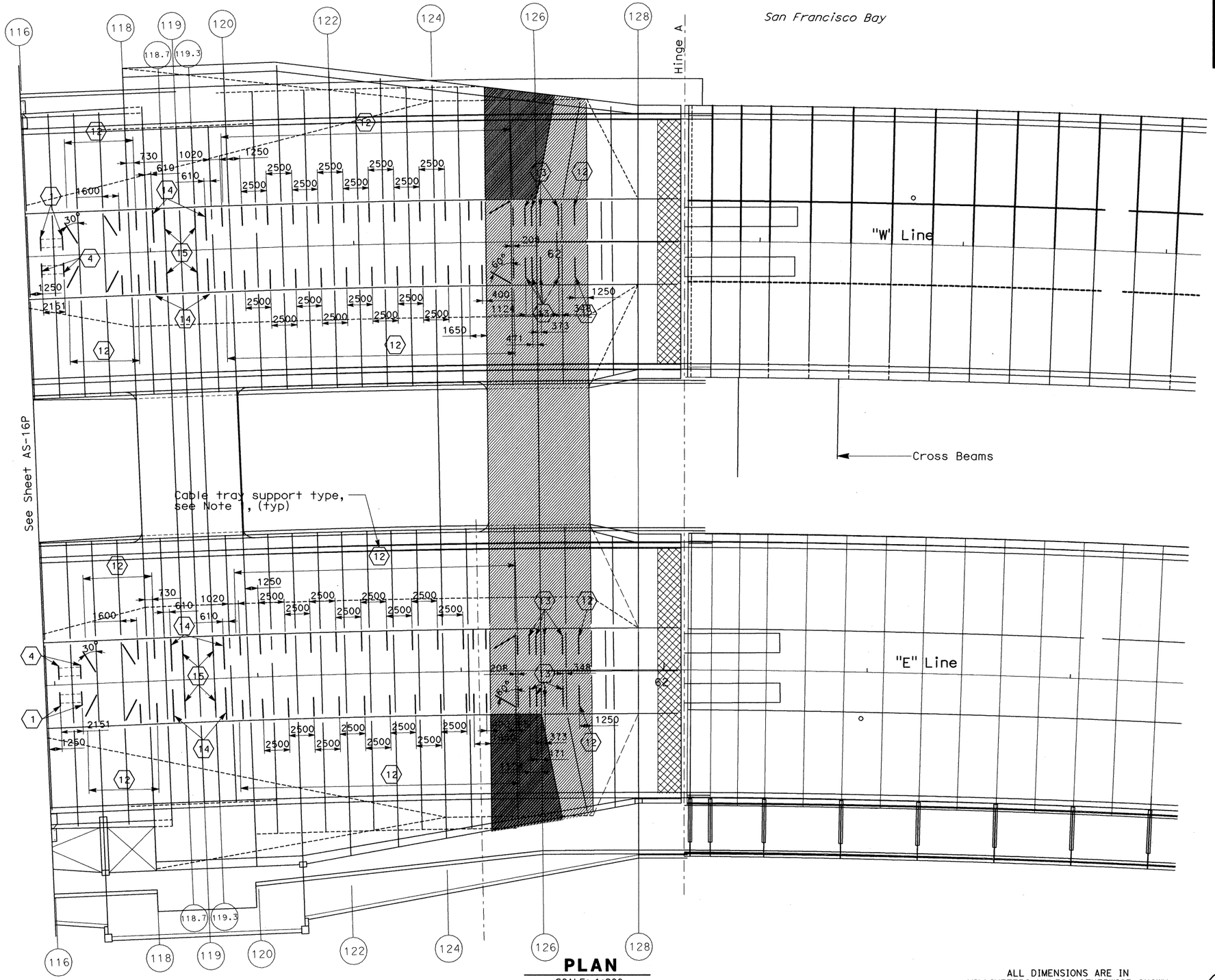

PLAN
SCALE: 1:200

DIST	COUNTY	ROUTE	KILOMETER POST TOTAL PROJECT	SHEET No	TOTAL SHEETS
04	SF	80	13.2/13.9	86 S15C	1204

REGISTERED CIVIL ENGINEER

PLANS APPROVAL DATE

REGISTERED PROFESSIONAL ENGINEER — No. — Exp. — CIVIL — STATE OF CALIFORNIA

The State of California or its officers or agents shall not be responsible for the accuracy or completeness of electronic copies of this plan sheet.

Parsons Brinckerhoff Quade & Douglas, Inc.
303 Second Street, Suite 700N
San Francisco, CA 94107

Caltrans now has a web site! To get to the web site, go to: http://www.dot.ca.gov

NOTES:

1. For cable tray support type, see Table A sheet AS-16R.

RFI#845 R00
RFI#919 R00
RFI#919 R01

ALL DIMENSIONS ARE IN MILLIMETERS UNLESS OTHERWISE SHOWN

Bob Zandipour
DESIGN OVERSIGHT

SIGN OFF DATE

	BY	CHECKED
DESIGN	J. Dones	M. S. Owyang
DETAILS	L. Reyes	J. Dones
QUANTITIES	J. Dones	P. McNamee

PREPARED FOR THE STATE OF CALIFORNIA DEPARTMENT OF TRANSPORTATION

Brady Nadell
PROJECT ENGINEER

BRIDGE NO. 34-0006
KILOMETER POST 13.2/13.9

SAS SUPERSTRUCTURE

OVERALL CABLE TRAY SUPPORT LOCATION PLAN PP 93 TO HINGE A - SHEET 6 OF 6

AS-16Q

DESIGN DETAIL SHEET (METRIC) (REV. 3/1/98)

ORIGINAL SCALE IN MILLIMETERS FOR REDUCED PLANS 0 10 20 30 40 50 60 70 80 90 100

CU 04251
EA 012OF1

DISREGARD PRINTS BEARING EARLIER REVISION DATES →

REVISION DATES (PRELIMINARY STAGE ONLY)

SHEET OF

FILE => $REQUEST

$FREQUEST
TIME PLOTTED => $TIME
DATE PLOTTED => $DATE
USERNAME => $USER

Caltrans Metric

DIST	COUNTY	ROUTE	KILOMETER POST TOTAL PROJECT	SHEET No	TOTAL SHEETS
04	SF	80	13.2/13.9	86 S16C	1204

REGISTERED CIVIL ENGINEER

PLANS APPROVAL DATE

REGISTERED PROFESSIONAL ENGINEER — No. — Exp. — CIVIL — STATE OF CALIFORNIA

The State of California or its officers or agents shall not be responsible for the accuracy or completeness of electronic copies of this plan sheet.

Parsons Brinckerhoff Quade & Douglas, Inc.
303 Second Street, Suite 700N
San Francisco, CA 94107

Caltrans now has a web site! To get to the web site, go to: http://www.dot.ca.gov

TABLE A

ITEM	DESCRIPTION	DETAIL SHEET	REMARKS
1	TYPE I	AS-11	
2A	TYPE I MODIFIED	AS-16A/SECTION A AS-16B/SECTION C AS-16C/SECTION H AS-16D/SECTION L	WESTBOUND
2B	TYPE I MODIFIED	AS-16F/SECTION C AS-16G/SECTION G AS-16H/SECTION K AS-16H/SECTION L	EASTBOUND
3A		AS-16A/SECTION A AS-16B/SECTION E AS-16C/SECTION F AS-16D/SECTION K	
3B	TYPE I MODIFIED	AS-16E/SECTION B AS-16F/SECTION D AS-16G/SECTION H AS-16G/SECTION J	EASTBOUND
4	TYPE II	AS-11	
5A	TYPE II MODIFIED	AS-16B/SECTION D AS-16B/SECTION C AS-16C/SECTION H AS-16D/SECTION J	WESTBOUND
5B	TYPE II MODIFIED	AS-16F/SECTION C AS-16G/SECTION F AS-16G/SECTION G AS-16H/SECTION M	EASTBOUND
6A	TYPE II MODIFIED	AS-16A/SECTION B AS-16B/SECTION E AS-16C/SECTION F AS-16C/SECTION G	WESTBOUND
6B	TYPE II MODIFIED	AS-16E/SECTION A AS-16F/SECTION D AS-16F/SECTION E AS-16G/SECTION H	EASTBOUND
7	TYPE V	AS-14	
8	TYPE VI	AS-14	
9	TYPE VII	AS-15	
10	TYPE VIIA	AS-15	
11	TYPE VIIB	AS-15	
12	TYPE VIII	AS-15	
13	TYPE IX	AS-15	
14	TYPE X	AS-16	
15	TYPE XI	AS-16J	

RFI#857 R00
RFI#790 R00
RFI#584 R00
RFI#793 R00
RFI#845 R00
RFI#811 R01
RFI#919 R00
RFI#919 R01

ALL DIMENSIONS ARE IN MILLIMETERS UNLESS OTHERWISE SHOWN

Bob Zandipour
DESIGN OVERSIGHT

SIGN OFF DATE

	BY	CHECKED
DESIGN	J. Dones	M. S. Owyang
DETAILS		
QUANTITIES		

PREPARED FOR THE STATE OF CALIFORNIA DEPARTMENT OF TRANSPORTATION

Brady Nadell
PROJECT ENGINEER

BRIDGE NO. 34-0006
KILOMETER POST 13.2/13.9

SAS SUPERSTRUCTURE

OVERALL CABLE TRAY SUPPORT LOCATIONS TABLE A

AS-16R

DESIGN DETAIL SHEET (METRIC) (REV. 3/1/98)

ORIGINAL SCALE IN MILLIMETERS FOR REDUCED PLANS 0 10 20 30 40 50 60 70 80 90 100

CU 04251
EA 0120F1

DISREGARD PRINTS BEARING EARLIER REVISION DATES

REVISION DATES (PRELIMINARY STAGE ONLY)

SHEET OF

FILE => $REQUEST

$REQUEST

DATE PLOTTED => $DATE TIME PLOTTED => $TIME USERNAME => $USER

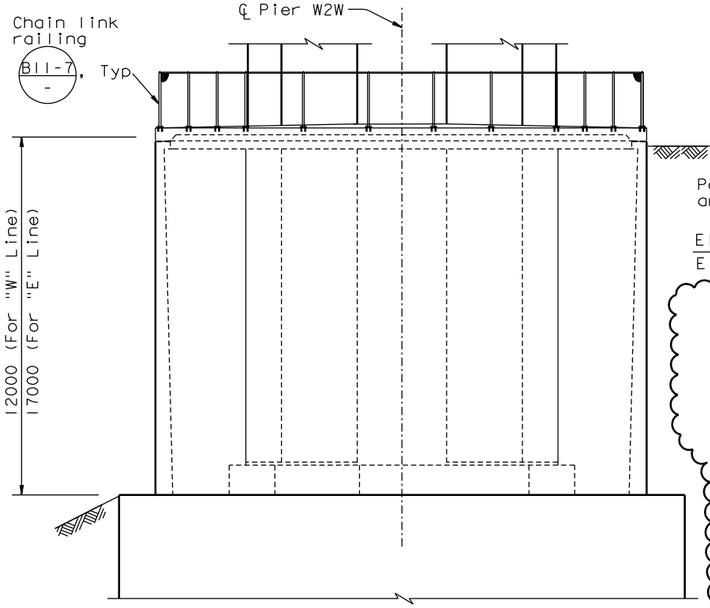

ELEVATION E-E (Pier W2W shown, Pier W2E similar)
1:100

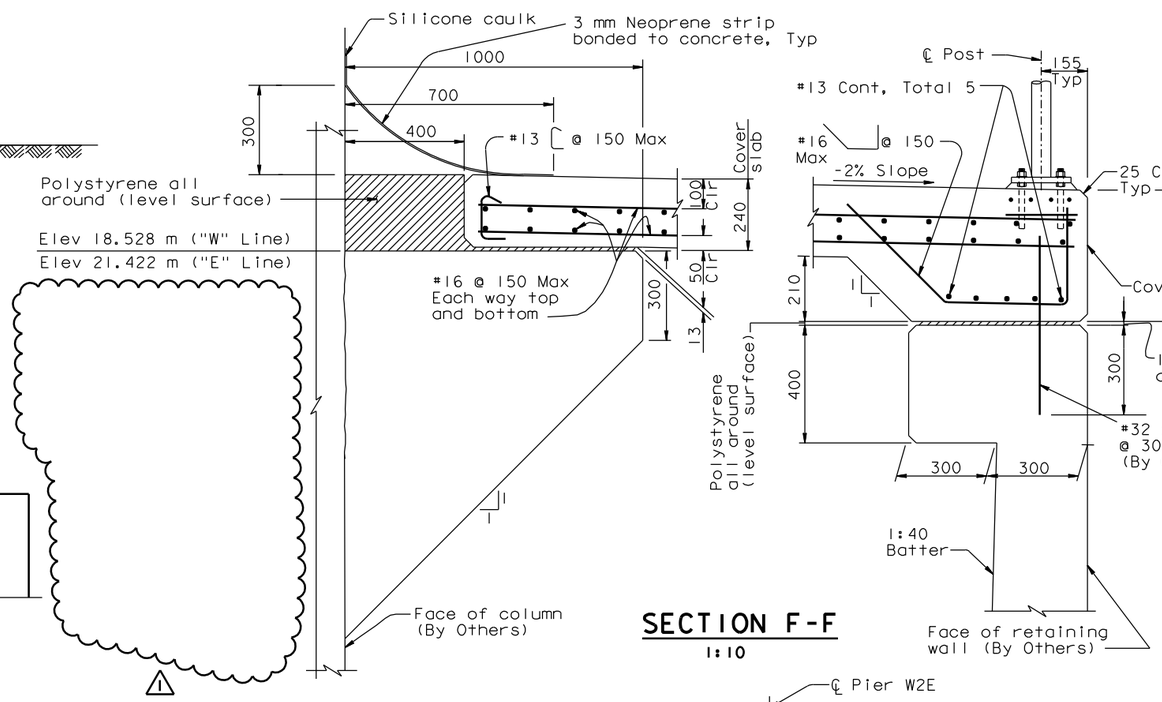

SECTION F-F
1:10

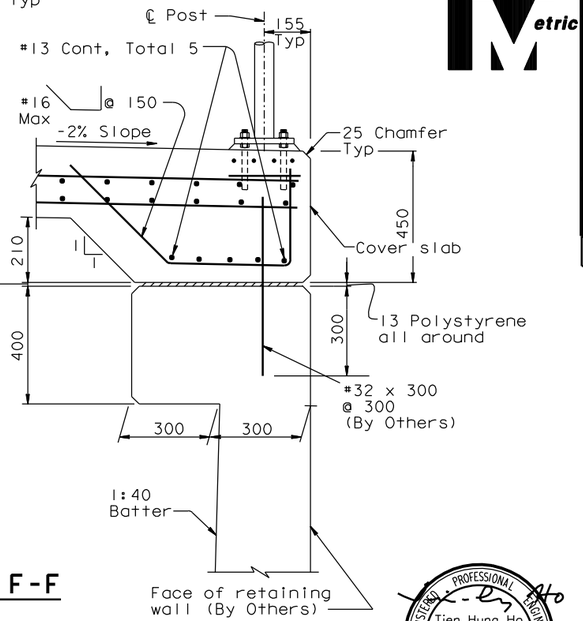

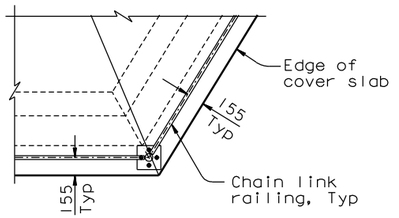

DETAIL A
1:25

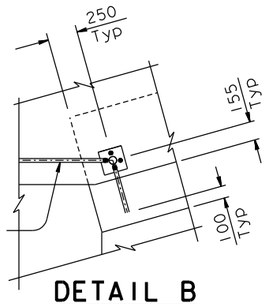

DETAIL B
1:25

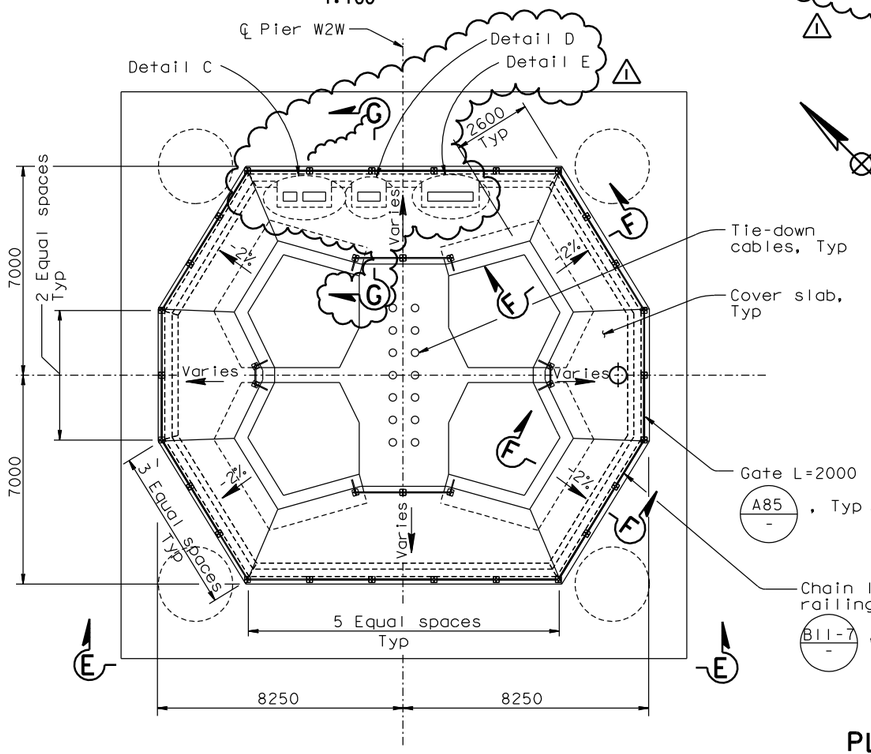

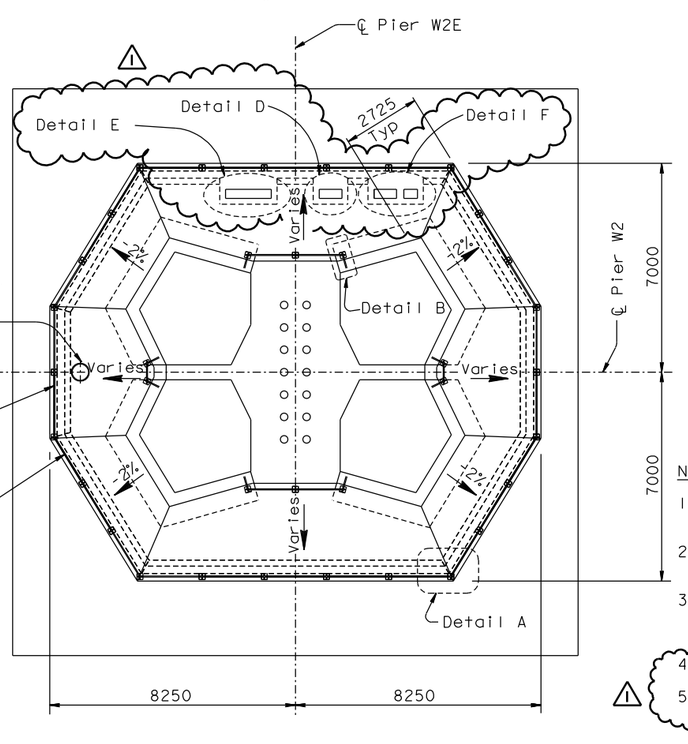

Access opening with manhole frame and cover
B7-11 U43 , Typ
B7-11 U46 , Typ

PLAN
1:100

DIST.	COUNTY	ROUTE	KILOMETER POST TOTAL PROJECT	SHEET NO.	TOTAL SHEETS
04	SF	80	13.2/13.9	452R1	1204

REGISTERED ENGINEER - CIVIL
12-6-04
PLANS APPROVAL DATE
REGISTERED PROFESSIONAL ENGINEER — John A. Denis — No. C 26169 — Exp. 03/31/06 — CIVIL — STATE OF CALIFORNIA

The State of California or its officers or agents shall not be responsible for the accuracy or completeness of electronic copies of this plan sheet.

T.Y. LIN / MOFFATT & NICHOL
825 BATTERY STREET
SAN FRANCISCO, CA 94111

Caltrans now has a web site! To get to the web site, go to: http://www.dot.ca.gov

REGISTERED PROFESSIONAL ENGINEER — Tien Hung Ho — No. C 43990 — Exp. 06/30/09 — CIVIL — STATE OF CALIFORNIA
FOR REVISIONS ONLY

MARK	DATE	REVISIONS	BY	CH'D	CCO#
1	01/09/08	CABLE TRAY CHANGES	TH	JD	42S1

CONTRACT CHANGE ORDER NO. ____
SHEET ___ OF ___

NOTES:

1. For pier W2 access details, see "Pier W2 Access Details" sheet.
2. For utility cable trays, location of openings and embed strut channel, see "Road Plans".
3. Fill gap between cable tray and concrete with polystyrene, caulk all around, covered with 3 mm Neoprene strip (similar to that shown in Section F-F).
4. For Section G-G see "Pier W2 Details No.6A" sheet.
5. For Details C, D, E and F, see "Pier W2 Details No.6A" sheet.

ALL DIMENSIONS ARE IN MILLIMETERS UNLESS OTHERWISE SHOWN

SAN FRANCISCO OAKLAND BAY BRIDGE
EAST SPAN SEISMIC SAFETY PROJECT
SELF-ANCHORED SUSPENSION BRIDGE
(SUPERSTRUCTURE & TOWER)

PIER W2 DETAILS NO.6

R. Valizadeh/V. Toan/Y.L./W.L./F.C.
DESIGN OVERSIGHT
SIGN OFF DATE 01/09/08

	BY	CHECKED
DESIGN	J. Denis	J. Leventini
DETAILS	K. Tam	J. Leventini
QUANTITIES	J. Denis	D. Harrison

PREPARED FOR THE STATE OF CALIFORNIA DEPARTMENT OF TRANSPORTATION

R. Manzanarez
PROJECT ENGINEER

BRIDGE NO. 34-0006L/R
KILOMETER POST 13.2/13.9

CU 04
EA 0120F1

DISREGARD PRINTS BEARING EARLIER REVISION DATES →
REVISION DATES (PRELIMINARY STAGE ONLY): 05/18/99 08/02/99 05/31/01 04/08/02 07/01/02 08/07/02 12/19/02 05/16/03 10/12/04

SHEET 35R1 OF

Rev. Date: 5-18-98

ORIGINAL SCALE IN MILLIMETERS FOR REDUCED PLANS 0 10 20 30 40 50 60 70 80 90 100

FILE => I:\bb\04-01200I\sas\contract plans and cco\cco\in progress\cco#42s1\dgn\aepir04-r1.dgn

DATE PLOTTED => 09 JAN 2008 TIME PLOTTED => 14:27:07
100% PS&E
USERNAME => ptom

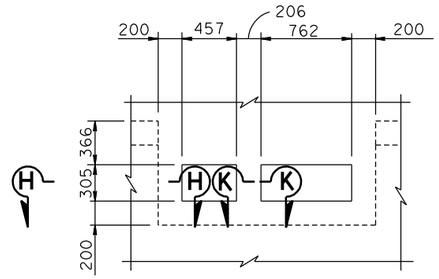

DETAIL C
1:25

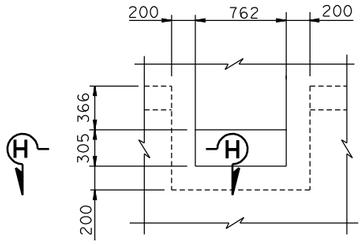

DETAIL D
1:25

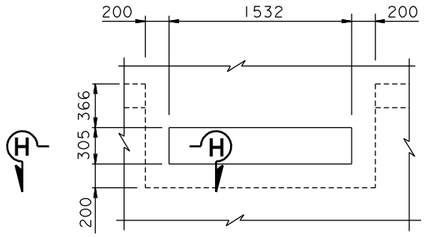

DETAIL E
1:25

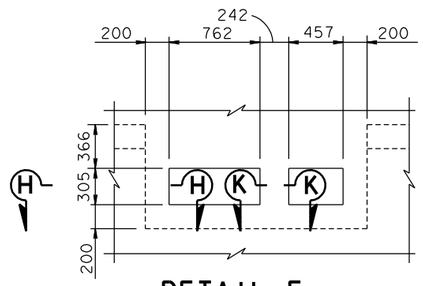

DETAIL F
1:25

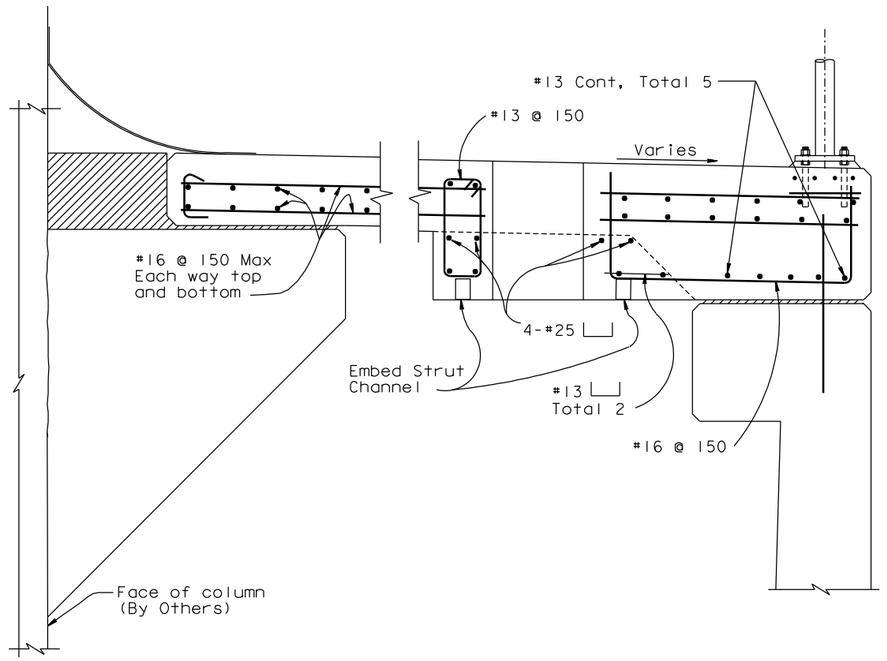

SECTION G-G
1:10

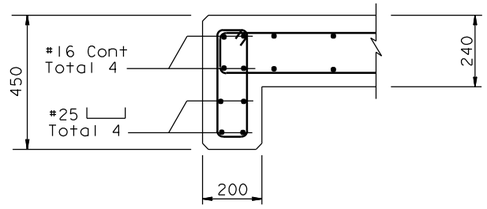

SECTION H-H
1:10

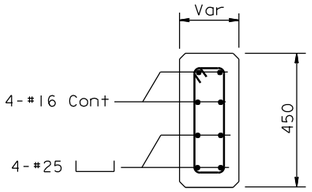

SECTION K-K
1:10

MARK	DATE	DESCRIPTIONS	BY	CH'D	CCO#
		REVISIONS			
0	01/09/08	CABLE TRAY CHANGES	TH	JD	42S1

CONTRACT CHANGE ORDER NO. ____
SHEET ____ OF ____

NOTES:

1. For utility cable trays, location of openings and embed strut channel, see "Road Plans".

ALL DIMENSIONS ARE IN MILLIMETERS UNLESS OTHERWISE SHOWN

Caltrans Metric

DIST.	COUNTY	ROUTE	KILOMETER POST TOTAL PROJECT	SHEET NO.	TOTAL SHEETS
04	SF	80	13.2/13.9	452S1	1204

REGISTERED ENGINEER - CIVIL
Tien Hung Ho
No. C 43990
Exp. 06/30/09
CIVIL
REGISTERED PROFESSIONAL ENGINEER
STATE OF CALIFORNIA

01-09-08
PLANS APPROVAL DATE

The State of California or its officers or agents shall not be responsible for the accuracy or completeness of electronic copies of this plan sheet.

T.Y. LIN / MOFFATT & NICHOL
825 BATTERY STREET
SAN FRANCISCO, CA 94111

Caltrans now has a web site! To get to the web site, go to: http://www.dot.ca.gov

R. Valizadeh/V. Toan/Y.L./W.L./F.C.
DESIGN OVERSIGHT
SIGN OFF DATE 01/09/08

	BY	CHECKED
DESIGN	T. Ho	J. Duxbury
DETAILS	T. Ho	J. Duxbury
QUANTITIES	T. Ho	J. Duxbury

PREPARED FOR THE STATE OF CALIFORNIA
DEPARTMENT OF TRANSPORTATION

R. Manzanarez
PROJECT ENGINEER

BRIDGE NO. 34-0006L/R
KILOMETER POST 13.2/13.9

CU 04
EA 0120F1

SAN FRANCISCO OAKLAND BAY BRIDGE
EAST SPAN SEISMIC SAFETY PROJECT
SELF-ANCHORED SUSPENSION BRIDGE
(SUPERSTRUCTURE & TOWER)
PIER W2 DETAILS NO. 6A

DISREGARD PRINTS BEARING EARLIER REVISION DATES →

REVISION DATES (PRELIMINARY STAGE ONLY)	SHEET	OF
01/09/08	35S1	

Rev. Date: 5-18-98

ORIGINAL SCALE IN MILLIMETERS FOR REDUCED PLANS 0 10 20 30 40 50 60 70 80 90 100

FILE => I:\bb\04-012001\sas\contract plans and cco\cco\in progress\cco#42s1\dgn\aepir04s1.dgn

100% PS&E
DATE PLOTTED => 09 JAN 2008
TIME PLOTTED => 14:24:32
USERNAME => ptom

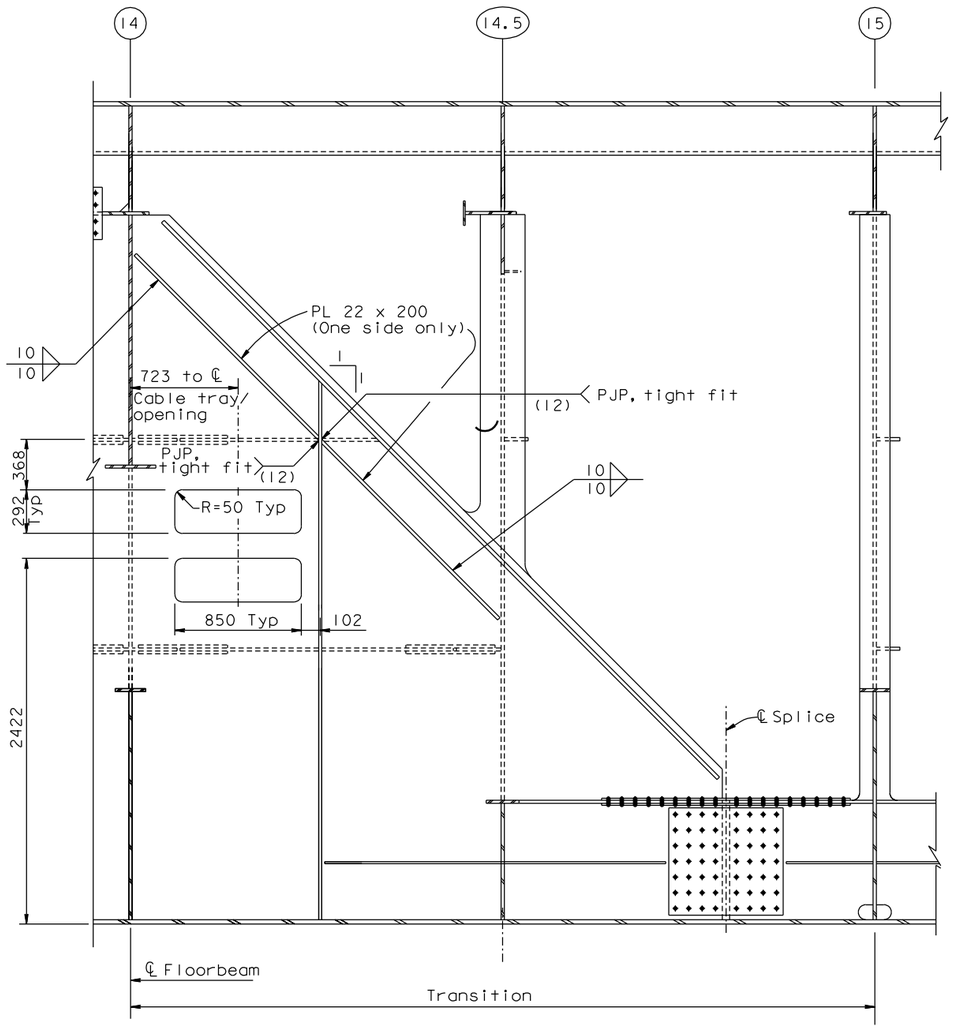

LONGITUDINAL SHEAR PLATE ELEVATION (PP14 to PP15)

1:20 (See Note 1)

NOTES:

1. For Details not shown, see "Typical Girder Details No. 7" sheet.

MARK	DATE	DESCRIPTIONS	BY	CH'D	CCO#
		REVISIONS			
0	01/09/08	CABLE TRAY CHANGES	DT	GB	42S1

CONTRACT CHANGE ORDER NO. _____
SHEET ___ OF ___

Caltrans Metric

DIST.	COUNTY	ROUTE	KILOMETER POST TOTAL PROJECT	SHEET NO.	TOTAL SHEETS
04	SF	80	13.2/13.9	631S1	1204

Daniel J. Turner
REGISTERED ENGINEER - CIVIL

01-09-08
PLANS APPROVAL DATE

REGISTERED PROFESSIONAL ENGINEER — Daniel J. Turner — No. C 65033 — Exp. 06/30/09 — CIVIL — STATE OF CALIFORNIA

The State of California or its officers or agents shall not be responsible for the accuracy or completeness of electronic copies of this plan sheet.

T.Y. LIN / MOFFATT & NICHOL
825 BATTERY STREET
SAN FRANCISCO, CA 94111

Caltrans now has a web site! To get to the web site, go to: http://www.dot.ca.gov

ALL DIMENSIONS ARE IN MILLIMETERS UNLESS OTHERWISE SHOWN

SAN FRANCISCO OAKLAND BAY BRIDGE
EAST SPAN SEISMIC SAFETY PROJECT
SELF-ANCHORED SUSPENSION BRIDGE
(SUPERSTRUCTURE & TOWER)

TYPICAL GIRDER DETAILS NO. 7A

R. Valizadeh/V. Toan/Y.L./W.L./F.C.
DESIGN OVERSIGHT
Ryan Valizadeh / Vong Toan / Y. Liu
SIGN OFF DATE 01/09/08

	BY	CHECKED
DESIGN	D. Turner	G. Baker
DETAILS	D. Turner	G. Baker
QUANTITIES	D. Turner	G. Baker

PREPARED FOR THE STATE OF CALIFORNIA DEPARTMENT OF TRANSPORTATION

R. Manzanarez
PROJECT ENGINEER

BRIDGE NO. 34-0006L/R
KILOMETER POST 13.2/13.9

Rev. Date: 5-18-98

ORIGINAL SCALE IN MILLIMETERS FOR REDUCED PLANS 0 10 20 30 40 50 60 70 80 90 100

CU 04
EA 0120F1

DISREGARD PRINTS BEARING EARLIER REVISION DATES →

REVISION DATES (PRELIMINARY STAGE ONLY): 01/09/08

SHEET 21451 OF

FILE => I:\bb\04-01200I\sas\contract plans and cco\cco\in progress\cco#42s1\dgn\agdkd04a.dgn

DATE PLOTTED => 09 JAN 2008 TIME PLOTTED => 14:26:10
USERNAME => ptom
100% PS&E

MARK	DATE	DESCRIPTIONS	BY	CH'D	CCO#
1	01/09/08	CABLE TRAY CHANGES	GB	DT	42S1
		REVISIONS			

CONTRACT CHANGE ORDER NO. ____
SHEET ____ OF ____

FOR REVISIONS ONLY

Daniel J. Turner
REGISTERED PROFESSIONAL ENGINEER
Daniel J. Turner
No. C 65033
Exp. 06/30/09
CIVIL
STATE OF CALIFORNIA

Caltrans Metric

DIST.	COUNTY	ROUTE	KILOMETER POST TOTAL PROJECT	SHEET NO.	TOTAL SHEETS
04	SF	80	13.2/13.9	706R1	1204

George Baker
REGISTERED ENGINEER - CIVIL
12-6-04
PLANS APPROVAL DATE

REGISTERED PROFESSIONAL ENGINEER
George S. Baker
No. C 57112
Exp. 12/31/05
CIVIL
STATE OF CALIFORNIA

The State of California or its officers or agents shall not be responsible for the accuracy or completeness of electronic copies of this plan sheet.

T.Y. LIN / MOFFATT & NICHOL
825 BATTERY STREET
SAN FRANCISCO, CA 94111

Caltrans now has a web site! To get to the web site, go to: http://www.dot.ca.gov

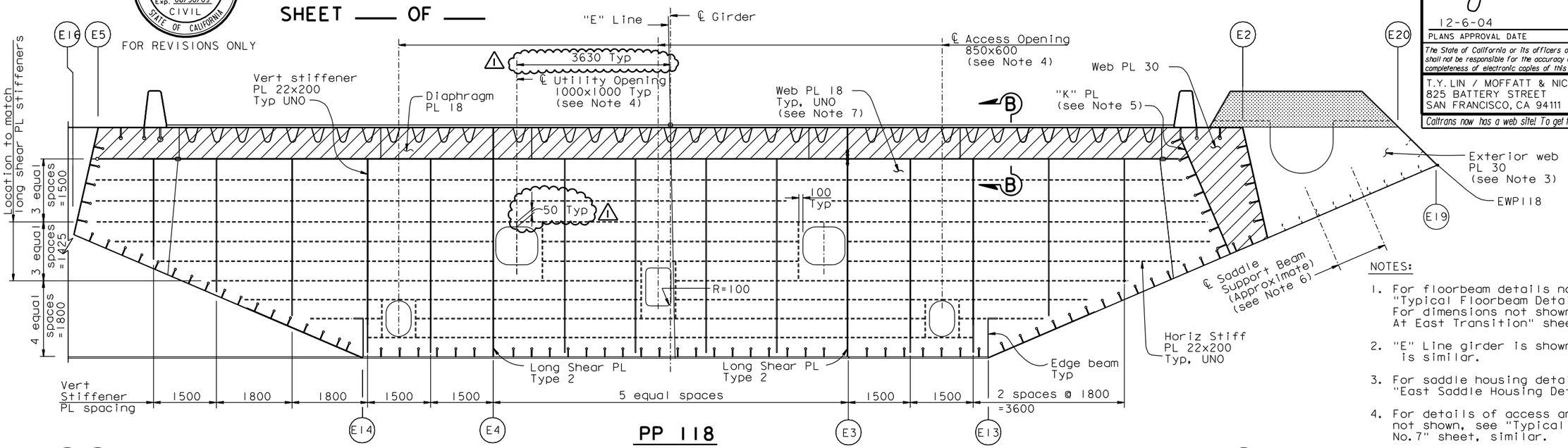

PP 118

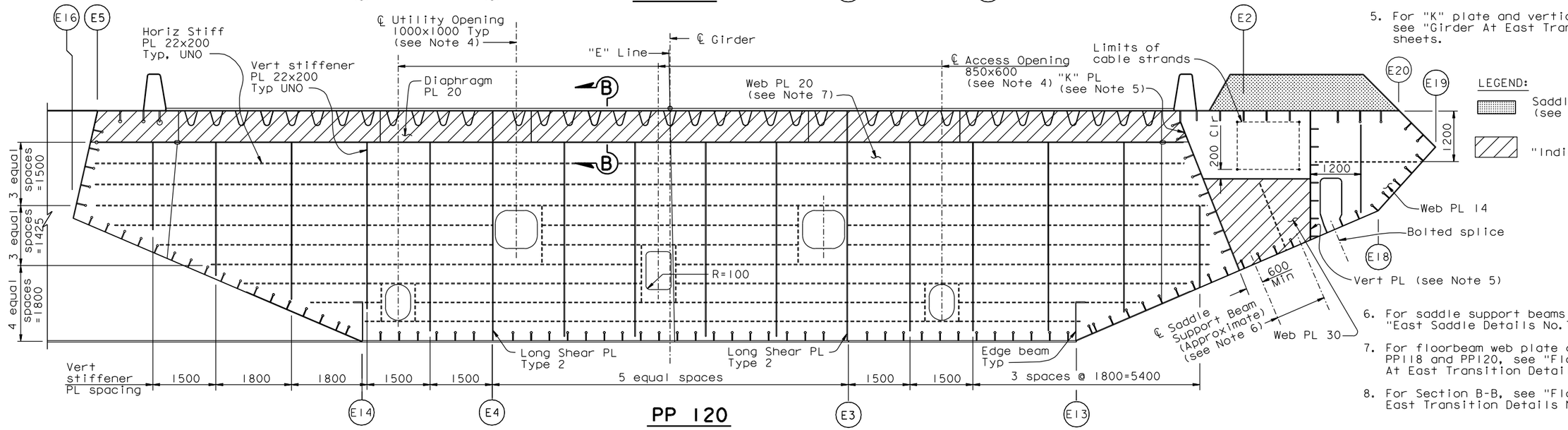

PP 120

"E" LINE SECTION (see Note 2)

1:50

NOTES:

1. For floorbeam details not shown, see "Typical Floorbeam Details No.1" sheet. For dimensions not shown, see "Girder At East Transition" sheets.
2. "E" Line girder is shown, "W" Line girder is similar.
3. For saddle housing details, see "East Saddle Housing Details" sheets.
4. For details of access and utility opening not shown, see "Typical Girder Details No.7" sheet, similar.
5. For "K" plate and vertical plate details, see "Girder At East Transition Details" sheets.
6. For saddle support beams details, see "East Saddle Details No.7" sheet.
7. For floorbeam web plate details at PP118 and PP120, see "Floorbeam At East Transition Details No.2" sheet.
8. For Section B-B, see "Floorbeam At East Transition Details No.1" sheet.

LEGEND:

Saddle Housing (see Note 3)

"Indicates SPCM web plate"

ALL DIMENSIONS ARE IN MILLIMETERS UNLESS OTHERWISE SHOWN

R. Valizadeh/V. Toan/Y.L./W.L./F.C.
DESIGN OVERSIGHT
SIGN OFF DATE 01/09/08

	BY	CHECKED
DESIGN	G. Baker	P. Ritchie
DETAILS	S. Camo	T. McMeans
QUANTITIES	C. Mauch	M. Roberts

PREPARED FOR THE STATE OF CALIFORNIA
DEPARTMENT OF TRANSPORTATION

R. Manzanarez
PROJECT ENGINEER

BRIDGE NO. 34-0006L/R
KILOMETER POST 13.2/13.9

SAN FRANCISCO OAKLAND BAY BRIDGE
EAST SPAN SEISMIC SAFETY PROJECT
SELF-ANCHORED SUSPENSION BRIDGE (SUPERSTRUCTURE & TOWER)

FLOORBEAM AT EAST TRANSITION NO.2

Rev. Date: 5-18-98

ORIGINAL SCALE IN MILLIMETERS FOR REDUCED PLANS 0 10 20 30 40 50 60 70 80 90 100

CU 04
EA 0120F1

DISREGARD PRINTS BEARING EARLIER REVISION DATES

REVISION DATES (PRELIMINARY STAGE ONLY): 01/15/99 | 05/15/99 | 08/02/99 | 05/31/01 | 04/08/02 | 07/01/02 | 12/19/02

SHEET 289R1 OF

FILE => I:\bb\04-0120I\sas\contract plans and cco\cco\in progress\cco*42s1\dgn\agefd02.dgn

DATE PLOTTED => 09 JAN 2008 TIME PLOTTED => 09:36:20
100 % PS&E
USERNAME => ptom

DIST.	COUNTY	ROUTE	KILOMETER POST TOTAL PROJECT	SHEET NO.	TOTAL SHEETS
04	SF	80	13.2/13.9	964R1	1204

George Baker
REGISTERED ENGINEER - CIVIL

1-27-03
PLANS APPROVAL DATE

REGISTERED PROFESSIONAL ENGINEER — George S. Baker — No. C57112 — Exp. 12/31/05 — CIVIL — STATE OF CALIFORNIA

The State of California or its officers or agents shall not be responsible for the accuracy or completeness of electronic copies of this plan sheet.

T.Y. LIN / MOFFATT & NICHOL
825 BATTERY STREET
SAN FRANCISCO, CA 94111

To get to the web site, go to: http://www.dot.ca.gov

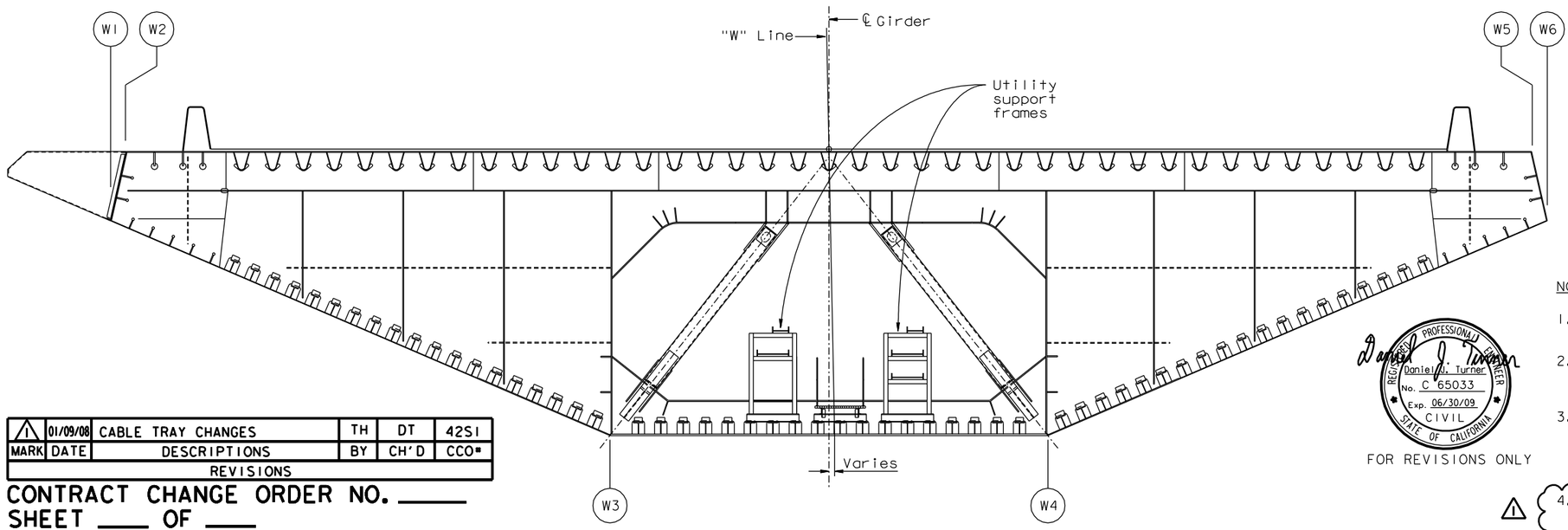

MARK	DATE	DESCRIPTIONS	BY	CH'D	CCO#
1	01/09/08	CABLE TRAY CHANGES	TH	DT	42S1
		REVISIONS			

CONTRACT CHANGE ORDER NO. ____
SHEET ___ OF ___

TYPICAL SECTION ("W" LINE SHOWN, "E" LINE SIMILAR)
1:50

Daniel J. Turner
REGISTERED PROFESSIONAL ENGINEER — Daniel J. Turner — No. C 65033 — Exp. 06/30/09 — CIVIL — STATE OF CALIFORNIA

FOR REVISIONS ONLY

NOTES:

1. For details of utility support frames, see "Road Plans" sheets.
2. For details of utility cable penetrations, see "Utility Details No.1" sheet. For cable diameters and fittings, see "Road Plans" sheets.
3. For utility cable penetrations closer than 1 m c-c spacing doubler plates shall be used at all such cutouts. For details see "Duct Opening Detail" on "Dehumidification Support Details No.5" sheet.
4. Minimum spacing shown may be reduced as approved by the Engineer.
5. For exact utility duct locations see "Typical Tray and Conduit Installation at Pier W2W" and "Typical Tray and Conduit Installation at Pier W2E" sheets.

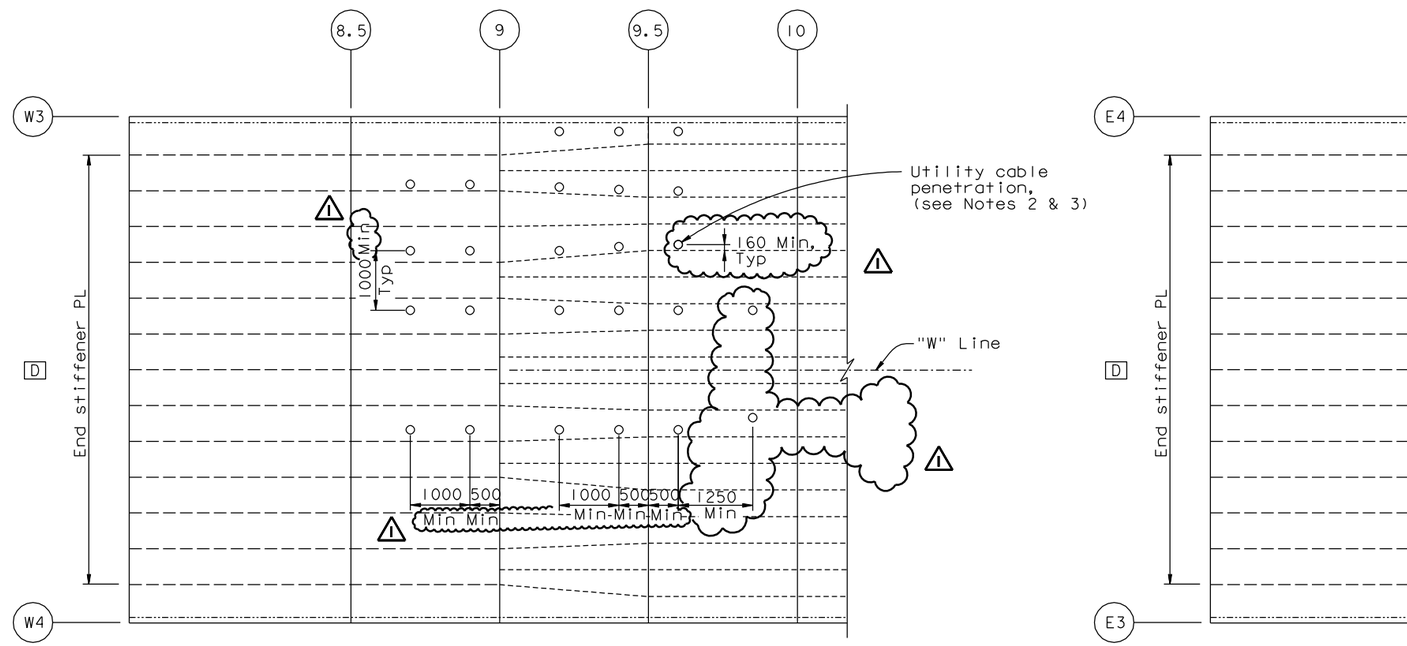

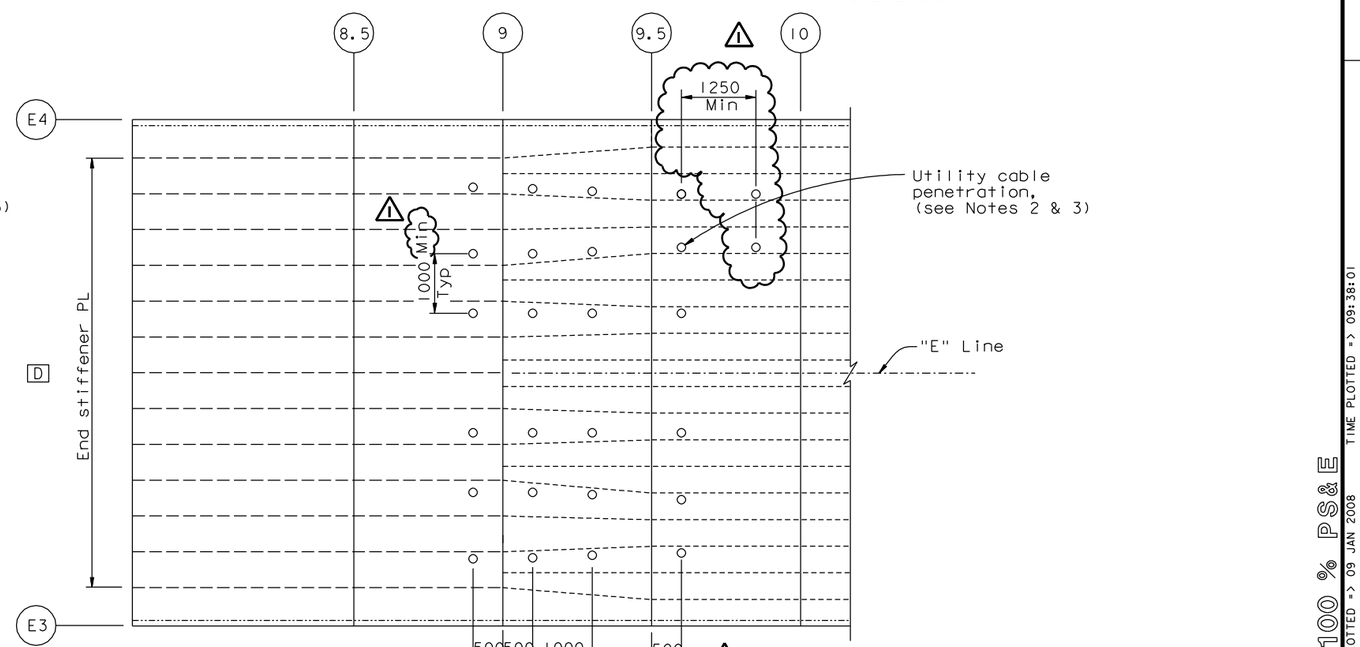

UTILITY DUCTS THROUGH GIRDER FACE D AT PIER W2 (See Notes 4 & 5)
1:50

ALL DIMENSIONS ARE IN MILLIMETERS UNLESS OTHERWISE SHOWN

R. Valizadeh/V. Toan/Y.L./W.L./F.C.	DESIGN	BY G. Baker	CHECKED T. Ho	PREPARED FOR THE STATE OF CALIFORNIA DEPARTMENT OF TRANSPORTATION	R. Manzanarez, PROJECT ENGINEER
DESIGN OVERSIGHT	DETAILS	BY M. Gulyas	CHECKED T. Ho		
SIGN OFF DATE 01/09/08	QUANTITIES	BY C. Mauch	CHECKED D. Harrison		

Rev. Date: 5-18-98

ORIGINAL SCALE IN MILLIMETERS FOR REDUCED PLANS 0 10 20 30 40 50 60 70 80 90 100

CU 04
EA 0120F1

BRIDGE NO. 34-0006L/R
KILOMETER POST 13.2/13.9

DISREGARD PRINTS BEARING EARLIER REVISION DATES →

REVISION DATES (PRELIMINARY STAGE ONLY): 05/06/99 | 08/02/99 | 05/31/01 | 04/08/02 | 07/01/02 | 12/19/02

SHEET 547R1 OF

SAN FRANCISCO OAKLAND BAY BRIDGE
EAST SPAN SEISMIC SAFETY PROJECT
SELF-ANCHORED SUSPENSION BRIDGE
(SUPERSTRUCTURE & TOWER)

UTILITY LAYOUT

FILE => I:\bb\04-012001\sas\contract plans and cco\cco\In progress\cco#42s1\dgn\akmsc11.dgn

100% PS&E
DATE PLOTTED => 09 JAN 2008 TIME PLOTTED => 09:38:01
USERNAME => ptom