| DIST | COUNTY | ROUTE | KILOMETER POST TOTAL PROJECT | SHEET No | TOTAL SHEETS |
|---|---|---|---|---|---|
| 04 | SF | 80 | 13.2/13.9 | 178 S2 | 1204 |

REGISTERED ELECTRICAL ENGINEER — DATE 2/22/08

REGISTERED PROFESSIONAL ENGINEER S. M. ESTOQUE, JR. No. E-10151 Exp. 12/31/2008 ELECTRICAL STATE OF CALIFORNIA

PLANS APPROVAL DATE

PB AMERICAS, Inc.
A Parsons Brinckerhoff Company
303 Second St., Suite 700N
San Francisco, CA 94107-1317

*The State of California or its officers or agents shall not be responsible for the accuracy or completeness of electronic copies of this plan sheet.*

*Caltrans now has a web site! To get to the web site, go to http://www.dot.ca.gov*

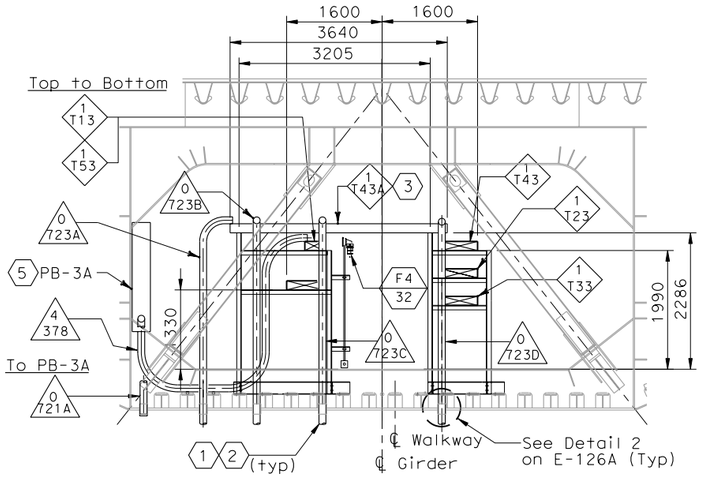


## SECTION A-A

SCALE 1:100

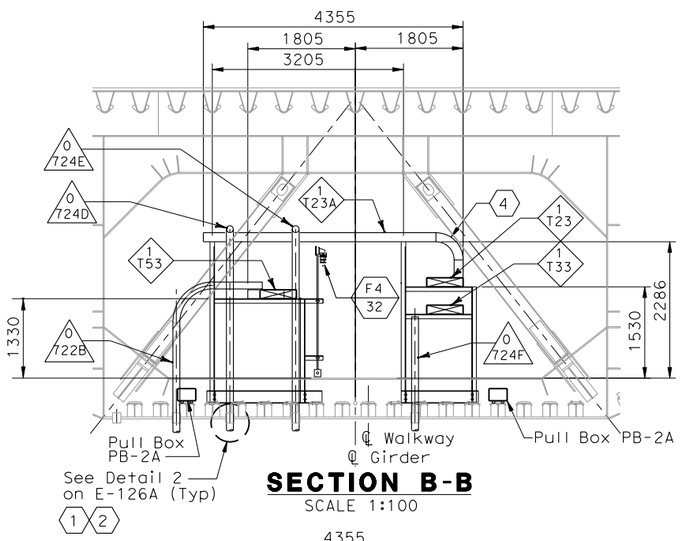


## SECTION B-B

SCALE 1:100

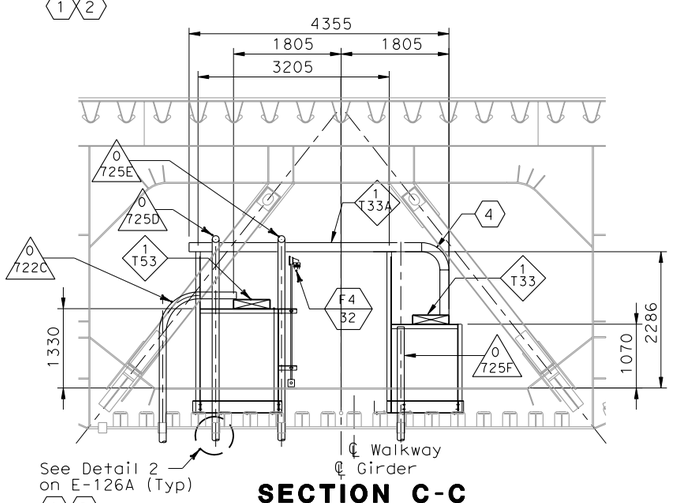


## SECTION C-C

SCALE 1:100

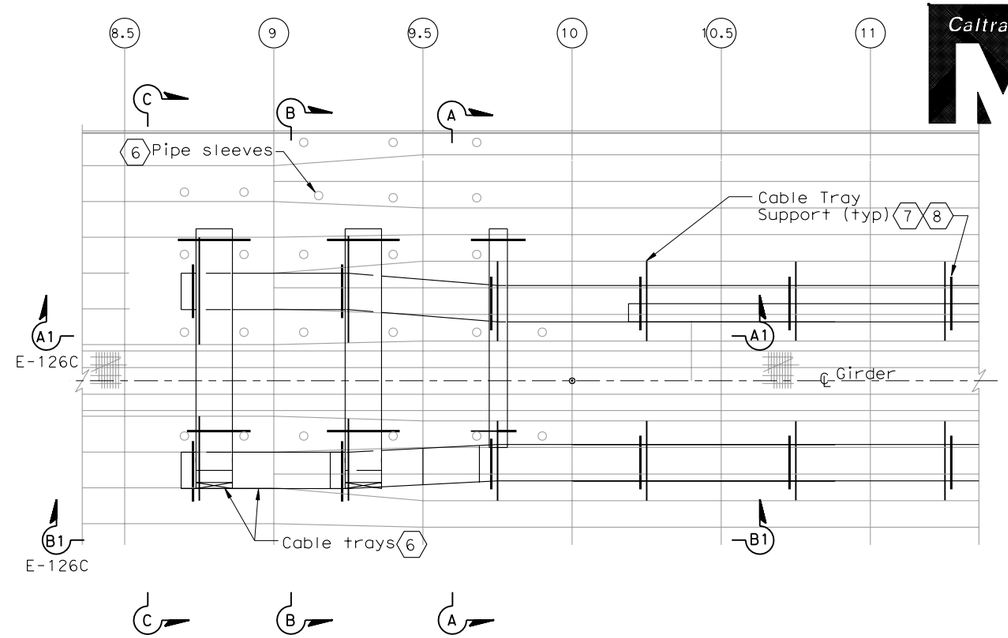


## CABLE TRAY SUPPORT LOCATION-PLAN

SCALE 1:100

## SHEET NOTES:

1. To prevent moisture from entering girder, Contractor to seal the space between sleeves and conduits.
2. Down to cable tray, for details see sheet E-126.
3. Provide drop out tray fitting.
4. Provide vertical bend segment type fitting. Fittting radius shall be 305 mm.
5. 15 KV splice box is bolted to longitudinal shear plate and installed by field.
6. For cable trays inside girder, pipe sleeves see sheet E-126A. The cable trays below W2 girder see sheet E-126.
7. The Contractor to provide cable tray hold down clamps.
8. For cable support see AS-16K

## TABLE A (6)

| Tray Number (Below Structure) | Conduit number Pipe Sleeve no. (Inside Girder) | Tray Number (Inside Girder) |
|---|---|---|
| T14 15 KV | 721A SP SP<br>71 72 73 | To PB-3A Pull Box |
| T54 Non-Caltrans Uitilities | 722A 72B 722C 722D<br>75 76 77 78 | T53 Non-Caltrans Uitilities |
| T49 TOS/COM | 723A 723B 723C 723D<br>74 79 84 89 | T43A TOS/COM |
| T29 600 V | 724A 724D 725A 725D 724B 724E<br>80 81 82 83 85 86 | T23A 600 V |
| T39 600 V | 725B 725E 724C 724F 725C 725F<br>87 88 90 91 92 93 | T33A T33 600 V |
| | - -<br>F1 F2 | |

## NOTES:

1. References:
   - For circuit and conduit/cable tray schedules, see sheets starting at E-401.
2. (SP) Denotes spare pipe sleeve for 103 mm conduit. Contractor to provided cap at exterior end (Unless Otherwise Noted).
3. For cable tray supports details, see AS sheets.
4. Cable trays fittings shall be 610 radius.

REQUEST FOR INFORMATION NOT ADDRESSED IN THIS CCO REMAIN IN FORCE

| MARK | DATE | DESCRIPTIONS | BY | CH'D | CCO# |
|---|---|---|---|---|---|
| 0 | 02/25/08 | CABLE TRAY CHANGES | TW | RG SE | 42S1 |

REVISIONS

CONTRACT CHANGE ORDER NO._____
SHEET _____ OF _____

# DETAILS
## SAS SUPERSTRUCTURE GIRDER WESTBOUND CABLE TRAY AND CONDUIT AT PIER W2W

SCALE AS NOTED

THIS PLAN ACCURATE FOR ELECTRICAL WORK ONLY.

ALL DIMENSIONS ARE IN MILLIMETERS UNLESS OTHERWISE SHOWN

**E-126B**

STATE OF CALIFORNIA - DEPARTMENT OF TRANSPORTATION

DESIGN OVERSIGHT: BEHZAD GOLEMOHAMMADI

CALCULATED/DESIGNED BY | CHECKED BY | DATE | REVISED BY | DATE REVISED

LAST REVISION 00-00-00 | DATE PLOTTED => 7/11/2008 | TIME PLOTTED => 2:47:36 PM

FOR REDUCED PLANS ORIGINAL SCALE IS IN MILLIMETERS 0 20 40 60 80

DGN FILE =>T:\13103\MS\pse\SAS Struc\CCO\SAS CCO42S1\CCO 42S1 Final Submittal 2008-07-11\04-0120f1_0178S02.dgn
USERNAME =>llorico

CU 04251 | EA 0120F1