DIST	COUNTY	ROUTE	KILOMETER POST TOTAL PROJECT	SHEET No	TOTAL SHEETS
04	SF	80	13.2/13.9	103 S1	1204

REGISTERED ELECTRICAL ENGINEER — DATE 2/22/08

REGISTERED PROFESSIONAL ENGINEER S. A. ESTOQUE, JR. No. E-10151 Exp. 12/31/2008 ELECTRICAL STATE OF CALIFORNIA

PLANS APPROVAL DATE

PB AMERICAS, Inc.
A Parsons Brinckerhoff Company
303 Second St., Suite 700N
San Francisco, CA 94107-1317

The State of California or its officers or agents shall not be responsible for the accuracy or completeness of electronic copies of this plan sheet.

Caltrans now has a web site! To get to the web site, go to http://www.dot.ca.gov

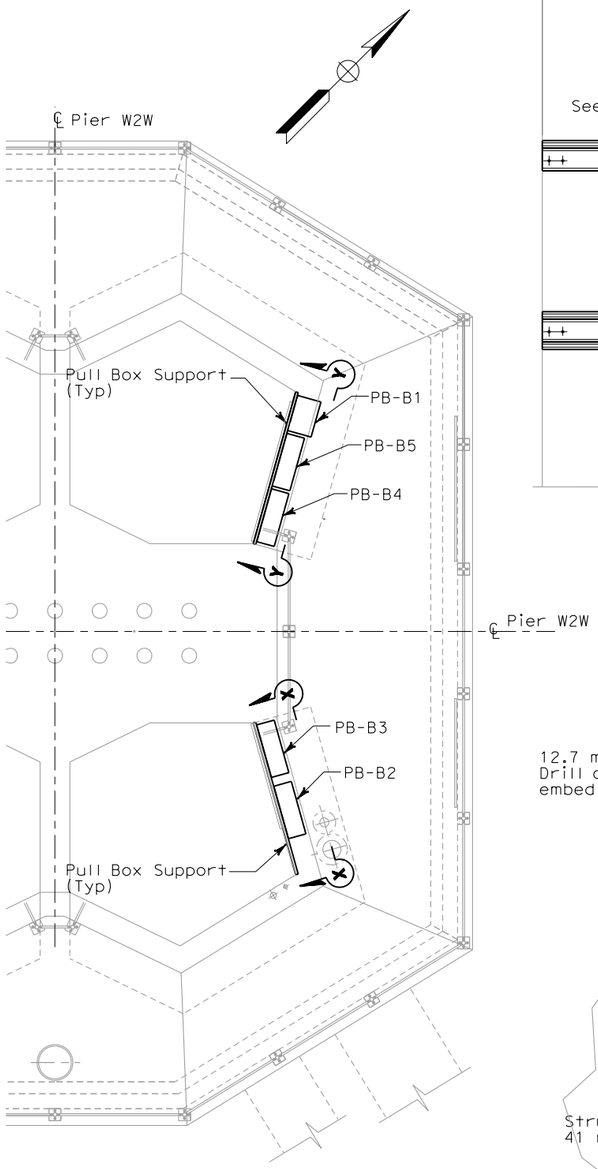

PLAN AT PIER W2W

PULL BOX MOUNTING AT FACE OF COLUMN
SCALE: 1:20

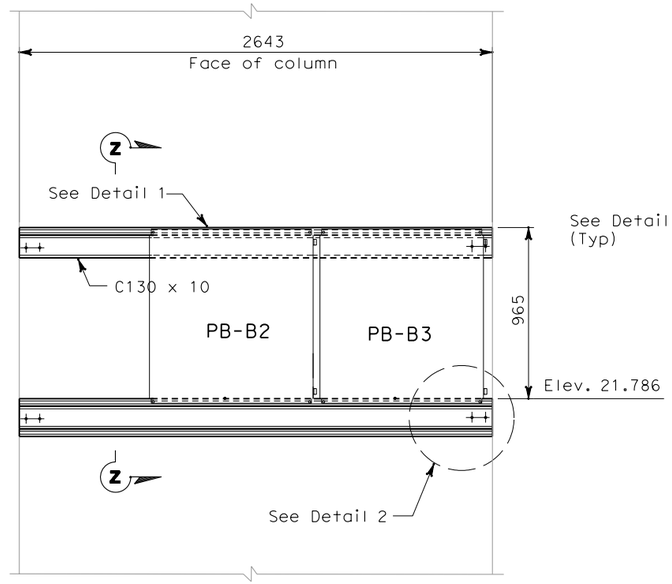

SECTION X-X (1)

PULL BOX SUPPORT
NO SCALE

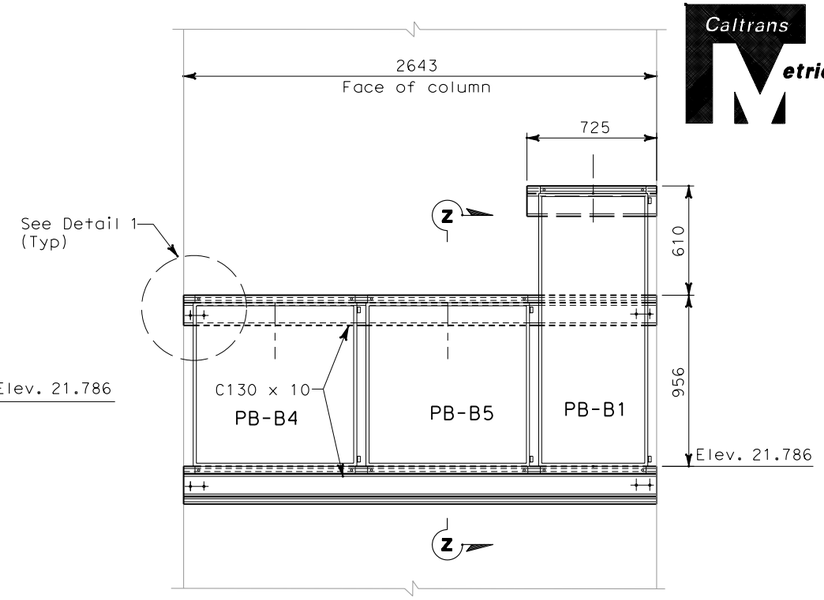

SECTION Y-Y (1)

PULL BOX SUPPORT
NO SCALE

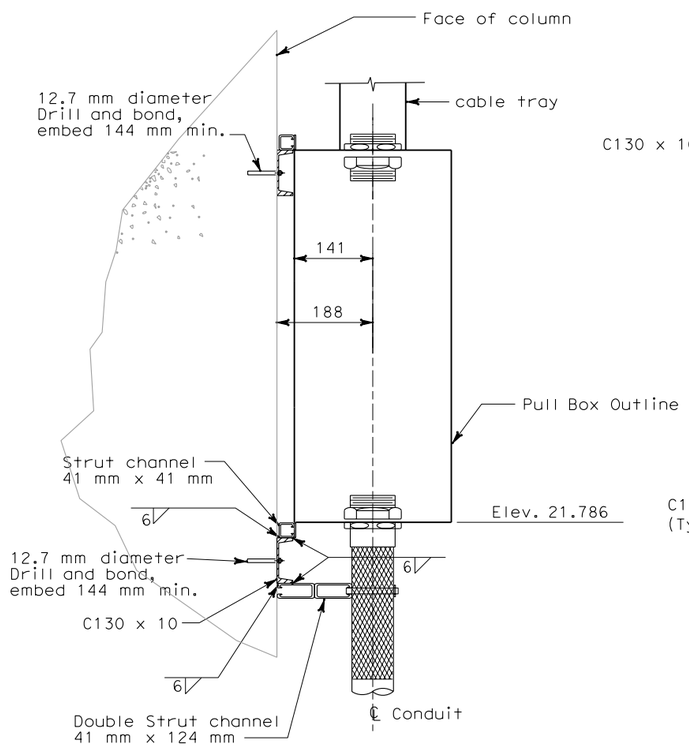

SECTION Z-Z

NO SCALE

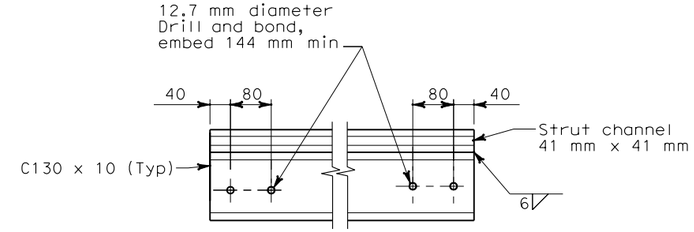

DETAIL 1

NO SCALE

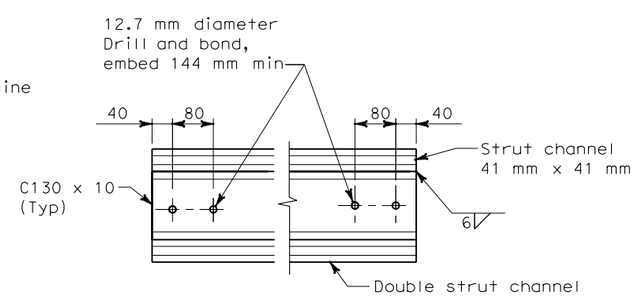

DETAIL 2

NO SCALE

NOTE:

1. Contractor shall verify all dimensions prior to start of work.

SHEET NOTES:

(1) For pull box sizes, location, opening and type, see E-20, E-20B, E-20C, and E-20D.

REQUEST FOR INFORMATION NOT ADDRESSED IN THIS CCO REMAIN IN FORCE

MARK	DATE	DESCRIPTIONS	BY	CH'D	CCO#
0	02/25/08	CABLE TRAY CHANGES	TW	RG SE	42S1

REVISIONS

CONTRACT CHANGE ORDER NO._____
SHEET _____ OF _____

DETAILS
UNDERGROUND
PIER W2W PLANS AND SECTIONS

SCALE AS NOTED

E-20A

DATE	REVISED BY	DATE	REVISED
7/07	TW	7/07	EJL

CALCULATED/DESIGNED BY — CHECKED BY

DESIGN OVERSIGHT — BEHZAD GOLEMOHAMMADI

STATE OF CALIFORNIA - DEPARTMENT OF TRANSPORTATION — Caltrans

LAST REVISION 00-00-00 — DATE PLOTTED => 7/11/2008 TIME PLOTTED => 2:01:53 PM

THIS PLAN IS ACCURATE FOR ELECTRICAL WORK ONLY.

ALL DIMENSIONS ARE IN MILLIMETERS UNLESS OTHERWISE SHOWN.

FOR REDUCED PLANS ORIGINAL SCALE IS IN MILLIMETERS 0 20 40 60 80

DGN FILE =>T:\13103\MS\pse\SAS Struc\CCO\SAS CCO42S1\CCO 42S1 Final Submittal 2008-07-11\04-0120f1_0103S01.dgn
USERNAME =>llorico

CU 04251 — EA 0120F1