DIST	COUNTY	ROUTE	KILOMETER POST TOTAL PROJECT	SHEET No	TOTAL SHEETS
04	SF	80	13.2/13.9	85R1	1204

REGISTERED CIVIL ENGINEER 4/2/04 DATE

12-6-04
PLANS APPROVAL DATE

REGISTERED PROFESSIONAL ENGINEER Mee Shing Owyang No. 24960 Exp. 12/31/07 CIVIL STATE OF CALIFORNIA

The State of California or its officers or agents shall not be responsible for the accuracy or completeness of electronic copies of this plan sheet.

Parsons Brinckerhoff Quade & Douglas, Inc.
303 Second Street, Suite 700N
San Francisco, CA 94107

Caltrans now has a web site! To get to the web site, go to: http://www.dot.ca.gov

Caltrans Metric

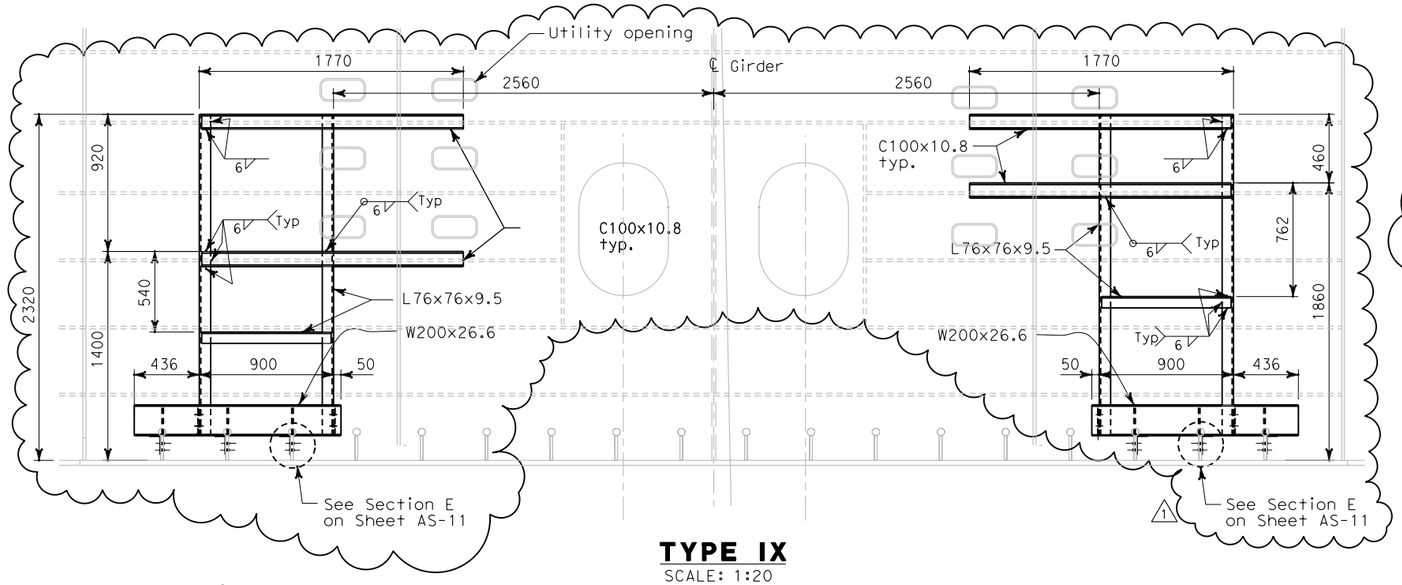

TYPE IX
SCALE: 1:20

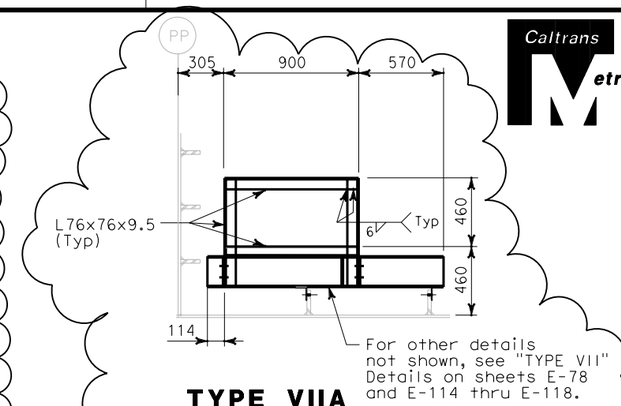

TYPE VIIA
SCALE: 1:20

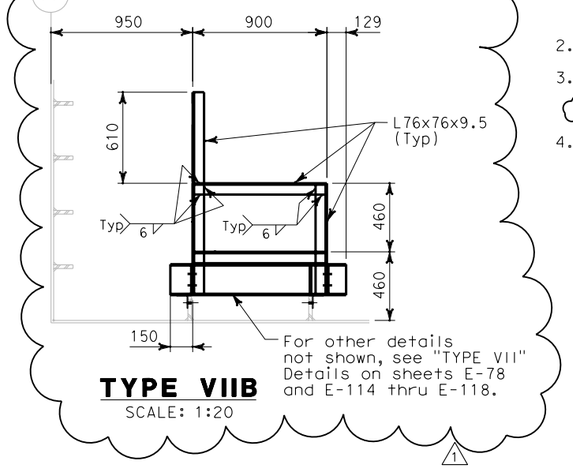

TYPE VIIB
SCALE: 1:20

NOTES:

1. The contractor shall verify all controlling field dimensions before ordering or fabricating any material.
2. For structural notes, see sheet AS-1.
3. For cable tray support locations, see electrical plans and dwgs AS-16K through AS-16R.
4. For details not shown, see sheet AS-11.

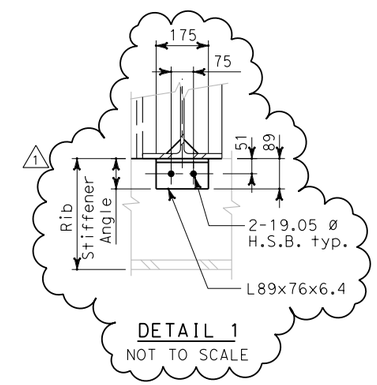

DETAIL 1
NOT TO SCALE

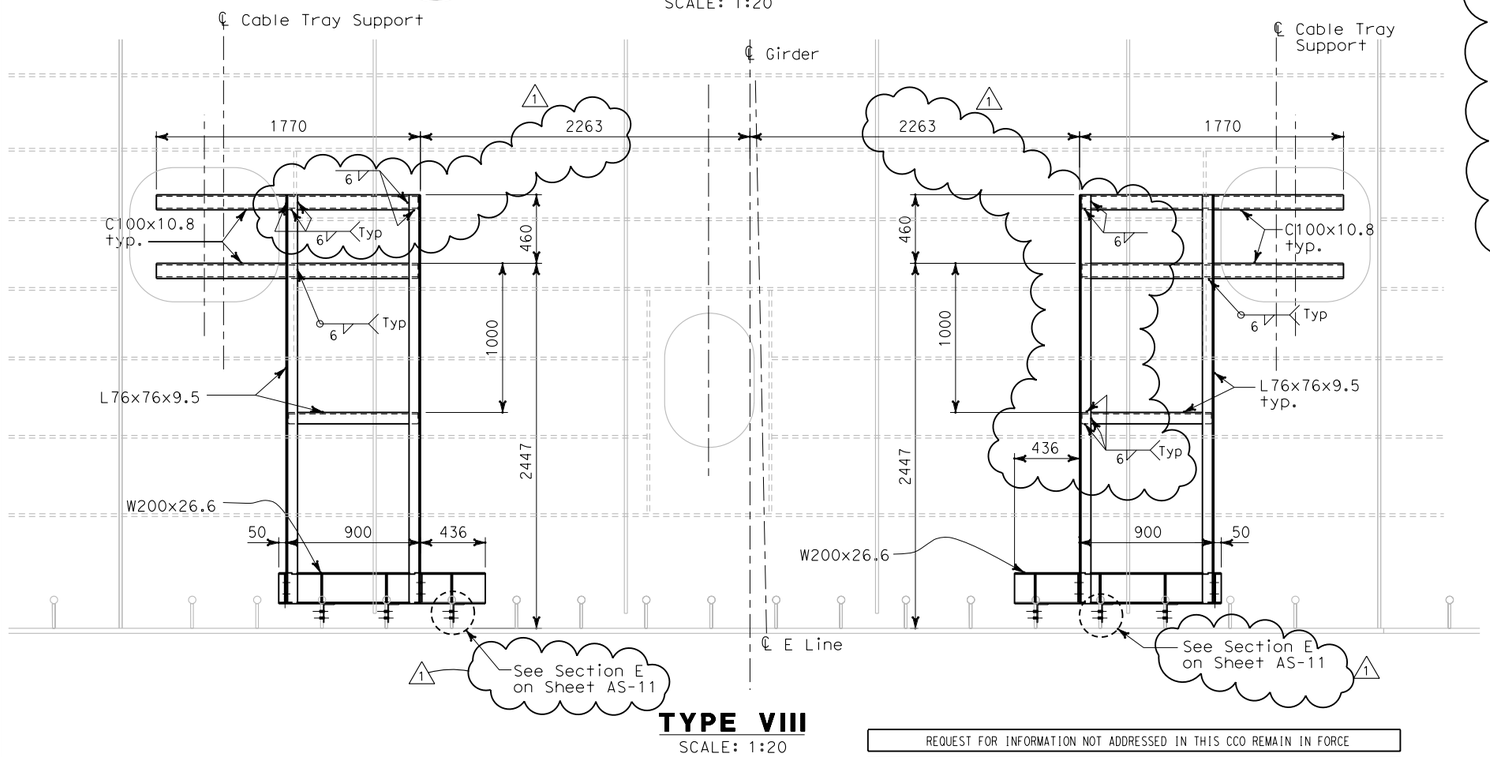

TYPE VIII
SCALE: 1:20

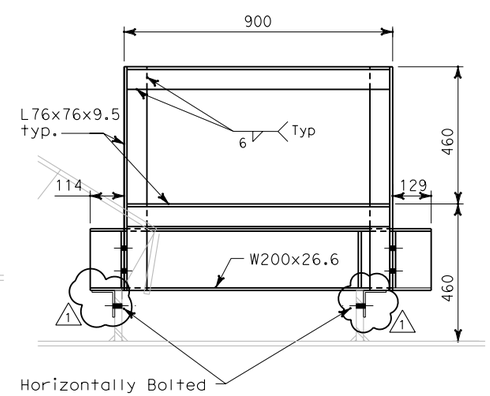

FRONT VIEW

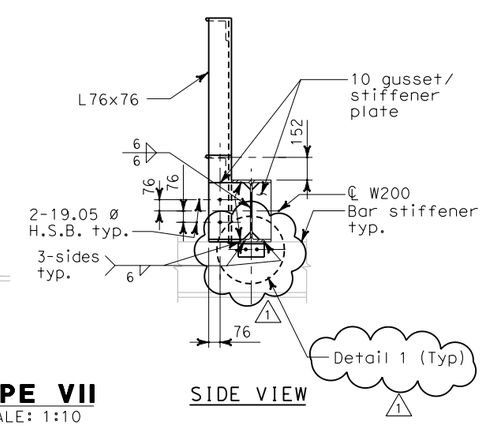

SIDE VIEW

TYPE VII
SCALE: 1:10

REQUEST FOR INFORMATION NOT ADDRESSED IN THIS CCO REMAIN IN FORCE					
1	02/25/08	CABLE TRAY CHANGES	TW	MSO	42S1
MARK	DATE	DESCRIPTIONS	BY	CH'D	CCO#
REVISIONS					

CONTRACT CHANGE ORDER NO. _____
SHEET _____ OF _____

ALL DIMENSIONS ARE IN MILLIMETERS UNLESS OTHERWISE SHOWN

Bob Zandipour
DESIGN OVERSIGHT
4-14-04
SIGN OFF DATE

	BY	CHECKED
DESIGN	I. Horton	M. S. Owyang
DETAILS	D. Chin	M. S. Owyang
QUANTITIES	I. Horton	P. McNamee

PREPARED FOR THE STATE OF CALIFORNIA DEPARTMENT OF TRANSPORTATION

Gene Lusherovich
PROJECT ENGINEER

BRIDGE NO. 34-0006
KILOMETER POST 13.2/13.9

SAS SUPERSTRUCTURE
CABLE TRAY SUPPORT DETAIL
AS-15

DISREGARD PRINTS BEARING EARLIER REVISION DATES →
REVISION DATES (PRELIMINARY STAGE ONLY)

SHEET 15 OF 16

DESIGN DETAIL SHEET (METRIC) (REV. 3/1/98)

ORIGINAL SCALE IN MILLIMETERS FOR REDUCED PLANS 0 10 20 30 40 50 60 70 80 90 100

CU 04251
EA 0120F1

FILE => T:\13103\MS\pse\SAS Struc\CCO\SAS CCO42S1\CCO 42S1 Final Submittal 2008-07-11\04-0120f1_0085R01.dgn

USERNAME => llorico DATE PLOTTED => 7/11/2008 TIME PLOTTED => 1:48:21 PM

$FREQUEST