DIST	COUNTY	ROUTE	KILOMETER POST TOTAL PROJECT	SHEET No	TOTAL SHEETS
04	SF	80	13.2/13.9	240 R1	1204

Caltrans Metric

12/19/02
REGISTERED ELECTRICAL ENGINEER DATE

12-6-04
PLANS APPROVAL DATE

REGISTERED PROFESSIONAL ENGINEER JENS ERLINGSSON No. 8249 Exp. 9/30/06 ELECTRICAL STATE OF CALIFORNIA

PB POWER, Inc.
A Parsons Brinckerhoff Company
303 Second St., Suite 700N
San Francisco, CA 94107-1317

The State of California or its officers or agents shall not be responsible for the accuracy or completeness of electronic copies of this plan sheet.

Caltrans now has a web site! To get to the web site, go to http://www.dot.ca.gov

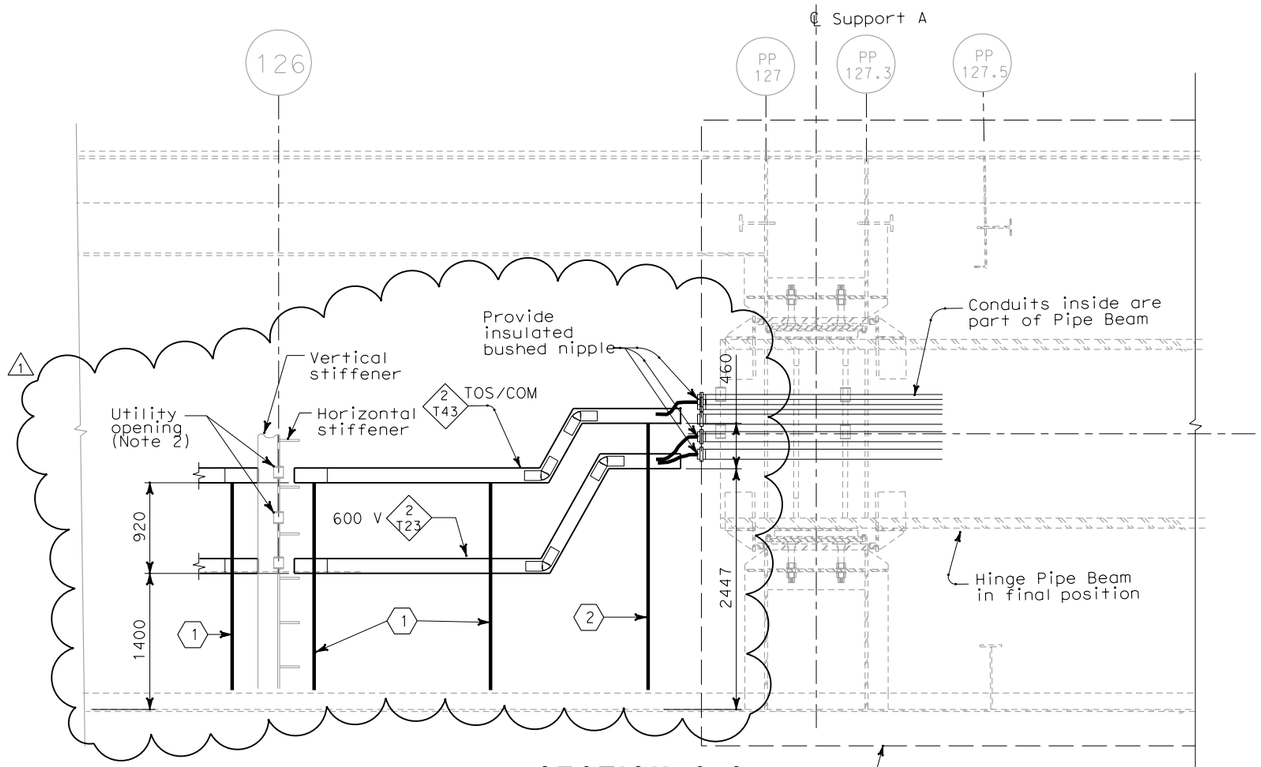

SECTION C-C
(SEE SHEET E-220)
SCALE 1:30

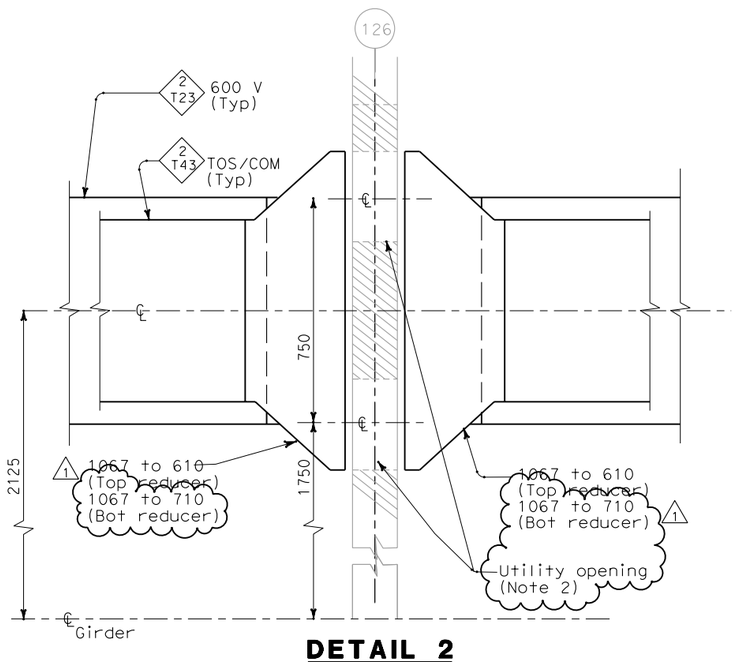

DETAIL 2
(SEE SHEET E-220)
SCALE 1:10

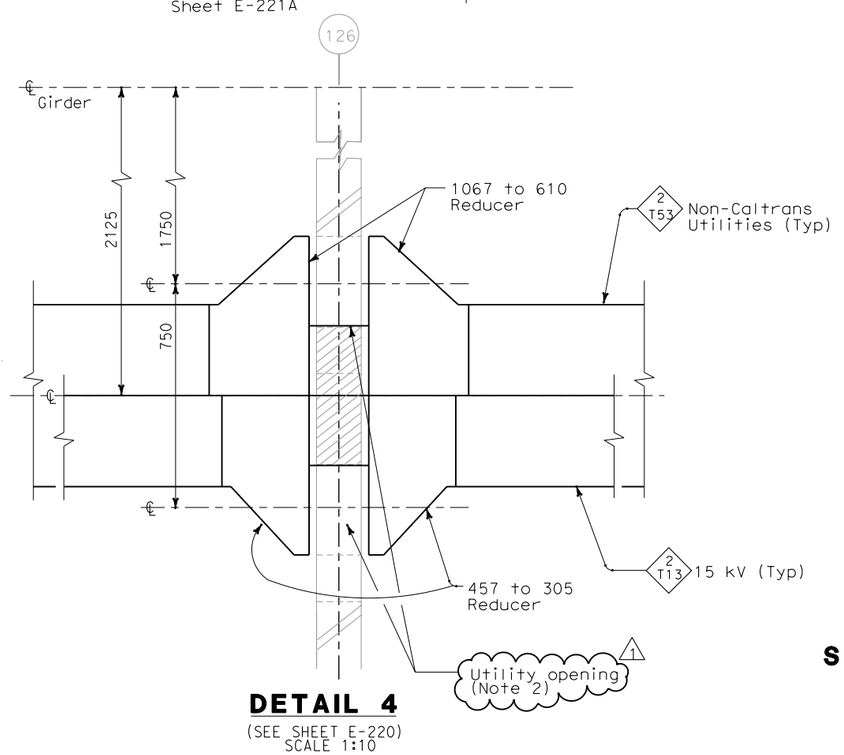

DETAIL 4
(SEE SHEET E-220)
SCALE 1:10

NOTES:

1. For utility opening details at panel point 126, see Structural sheets.
2. Install grommet of neoprene rubber or similar materials to protect cable insulation from sharp metallic edges.

SHEET NOTES:

1. For Type IX cable tray support structure, see AS-15.
2. For Type VIII cable tray support structure, see AS-15.

REGISTERED PROFESSIONAL ENGINEER S. A. ESTOQUE, JR No. E-10151 Exp. 12/31/2008 ELECTRICAL STATE OF CALIFORNIA

FOR REVISION ONLY

REQUEST FOR INFORMATION NOT ADDRESSED IN THIS CCO REMAIN IN FORCE

MARK	DATE	DESCRIPTIONS	BY	CH'D	CCO#
1	02/25/08	CABLE TRAY CHANGES	MP	RG SE	42S1

REVISIONS

CONTRACT CHANGE ORDER NO._____
SHEET _____ OF _____

DETAILS
SAS SUPERSTRUCTURE GIRDER EASTBOUND HINGE AE
SCALE AS NOTED

E-221

THIS PLAN ACCURATE FOR ELECTRICAL WORK ONLY.

ALL DIMENSIONS ARE IN MILLIMETERS UNLESS OTHERWISE SHOWN

FOR REDUCED PLANS ORIGINAL SCALE IS IN MILLIMETERS 0 20 40 60 80

DGN FILE =>T:\13103\MS\pse\SAS Struc\CCO\SAS CCO42S1\04-0120f1_0240R01.dgn
USERNAME =>llorico

CU 04251

EA 0120F1

STATE OF CALIFORNIA - DEPARTMENT OF TRANSPORTATION
Caltrans

DESIGN OVERSIGHT
BEHZAD GOLEMOHAMMADI

CALCULATED/DESIGNED BY EDC DATE 08/02 REVISED BY IAH
CHECKED BY CYF 08/02 DATE REVISED 3/04

LAST REVISION 00-00-00
DATE PLOTTED => 4/18/2008
TIME PLOTTED => 5:17:39 PM