DIST	COUNTY	ROUTE	KILOMETER POST TOTAL PROJECT	SHEET No	TOTAL SHEETS
04	SF	80	13.2/13.9	239 R1	1204

Jens Erlingsson 12/19/02
REGISTERED ELECTRICAL ENGINEER DATE

12-6-04
PLANS APPROVAL DATE

REGISTERED PROFESSIONAL ENGINEER JENS ERLINGSSON No. 8249 Exp. 9/30/06 ELECTRICAL STATE OF CALIFORNIA

PB POWER, Inc.
A Parsons Brinckerhoff Company
303 Second St., Suite 700N
San Francisco, CA 94107-1317

The State of California or its officers or agents shall not be responsible for the accuracy or completeness of electronic copies of this plan sheet.

Caltrans now has a web site! To get to the web site, go to http://www.dot.ca.gov

Caltrans Metric

NOTE:

1. References:
   - For SAS Superstructure Girder Eastbound plan, see sheet E-186.
   - For SAS Superstructure Girder Eastbound typical section, see sheet E-207.

SHEET NOTES:

(1) For utility opening detail, see structural sheets.

(2) For Type I cable tray support structure, see AS-sheets.

(3) For Type VIII cable tray support structure, see AS-sheets.

(4) For Type IX cable tray support structure, see AS-sheets.

(5) For Type II Cable Tray Support Structure, see AS-sheets. (Omit bottom rung).

(6) For Type X Cable Tray Support Structure, see AS-sheets.

(7) Type I Cable Tray Support Structure modified. (Omit stanchion mounted lighting supports). For details, see AS-sheets.

(8) Type II Cable Tray Support Structure modified. (Omit bottom rung). For details, see AS-sheets.

(9) Type VIII support with the exception of angle steel bracket oriented as shown on Detail 1. For Details, see AS-sheets.

(10) For Type XI cable tray support structure, see AS-sheets.

(11) For cable tray support see drawing AS-160.

(12) Install grommet of neoprene rubber or similar materials to protect cable insulation from sharp metallic edges.

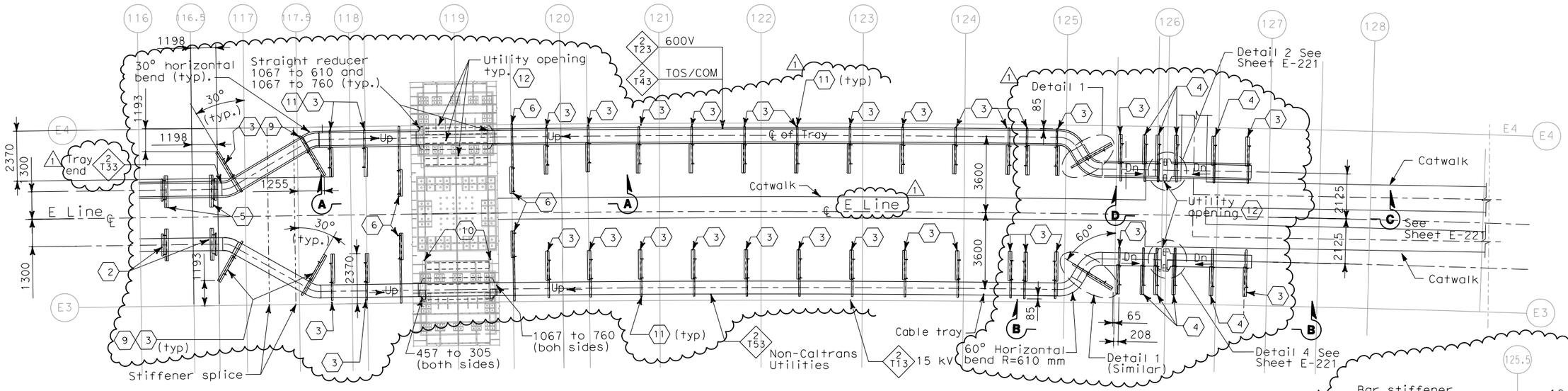

PARTIAL PLAN
SCALE 1:100

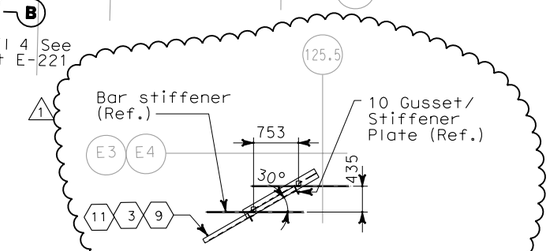

DETAIL 1
SCALE 1:100

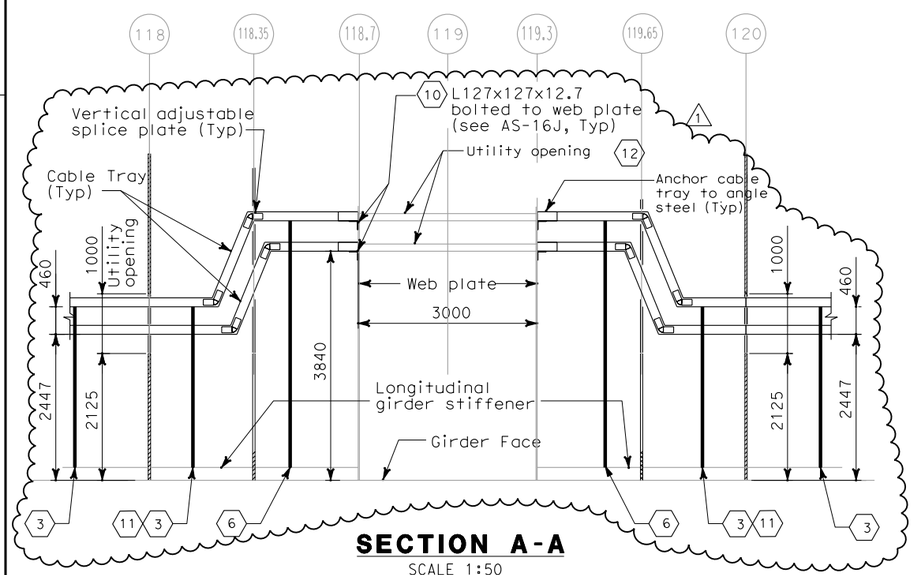

SECTION A-A
SCALE 1:50

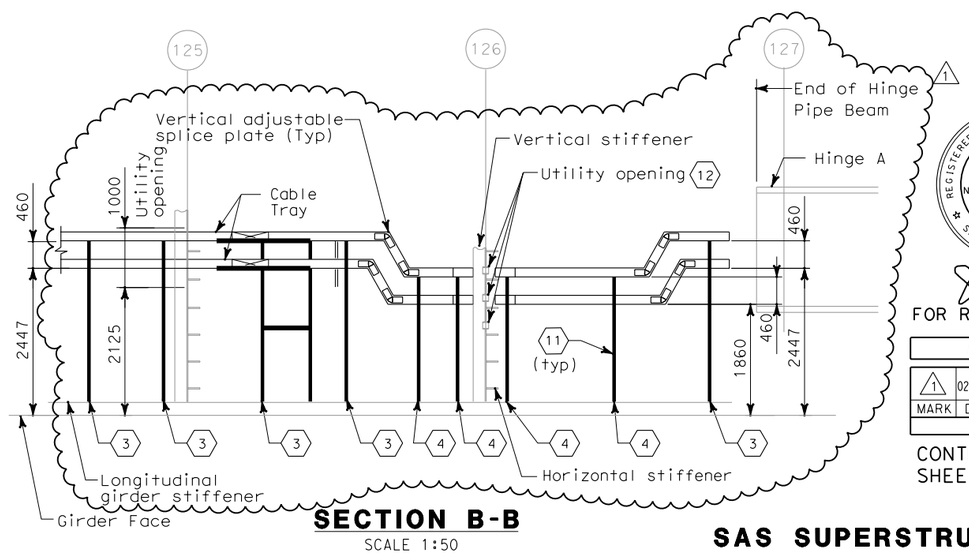

SECTION B-B
SCALE 1:50

REGISTERED PROFESSIONAL ENGINEER S. A. ESTOQUE, JR. No. E-10151 Exp. 12/31/2008 ELECTRICAL STATE OF CALIFORNIA

FOR REVISION ONLY

REQUEST FOR INFORMATION NOT ADDRESSED IN THIS CCO REMAIN IN FORCE

MARK	DATE	DESCRIPTIONS	BY	CH'D	CCO#
1	02/25/08	CABLE TRAY CHANGES	TW	RG SE	42S1

REVISIONS

CONTRACT CHANGE ORDER NO._____
SHEET ____ OF ____

DETAILS
SAS SUPERSTRUCTURE GIRDER EASTBOUND HINGE AE
SCALE AS NOTED

E-220

CALCULATED/ DESIGNED BY	EDC	DATE 08/02	REVISED BY	IAH
CHECKED BY	CYF	08/02	DATE REVISED	3/04

DESIGN OVERSIGHT
BEHZAD GOLEMOHAMMADI

STATE OF CALIFORNIA - DEPARTMENT OF TRANSPORTATION
Caltrans

THIS PLAN ACCURATE FOR ELECTRICAL WORK ONLY.

ALL DIMENSIONS ARE IN MILLIMETERS UNLESS OTHERWISE SHOWN

FOR REDUCED PLANS ORIGINAL SCALE IS IN MILLIMETERS 0 20 40 60 80

DGN FILE =>T:\13103\MS\pse\SAS Struc\CCO\SAS CCO42S1\04-0120f1_0239R01.dgn
USERNAME =>llorico

CU 04251

EA 0120F1

LAST REVISION 00-00-00
DATE PLOTTED => 4/18/2008
TIME PLOTTED => 5:17:59 PM