DIST	COUNTY	ROUTE	KILOMETER POST TOTAL PROJECT	SHEET No	TOTAL SHEETS
04	SF	80	13.2/13.9	235 S2	1204

REGISTERED ELECTRICAL ENGINEER — DATE 2/22/08

REGISTERED PROFESSIONAL ENGINEER S. A. ESTOQUE, JR. No. E-10151 Exp. 12/31/2008 ELECTRICAL STATE OF CALIFORNIA

PLANS APPROVAL DATE

PB AMERICAS, Inc.
A Parsons Brinckerhoff Company
303 Second St., Suite 700N
San Francisco, CA 94107-1317

The State of California or its officers or agents shall not be responsible for the accuracy or completeness of electronic copies of this plan sheet.

Caltrans now has a web site! To get to the web site, go to http://www.dot.ca.gov

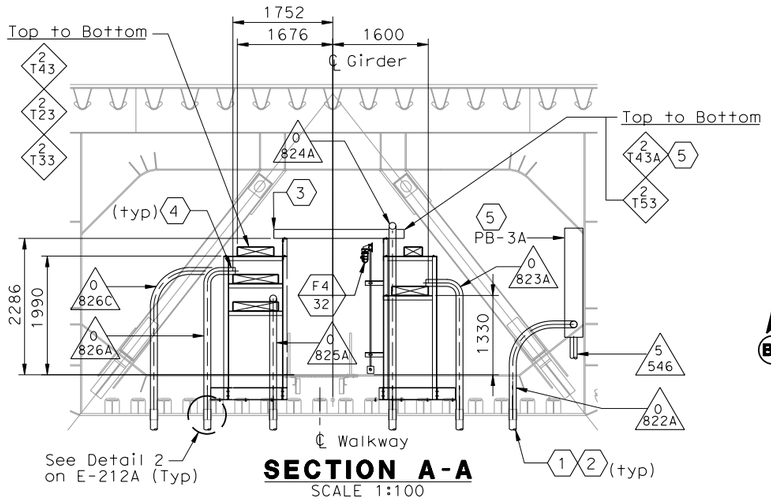

SECTION A-A

SCALE 1:100

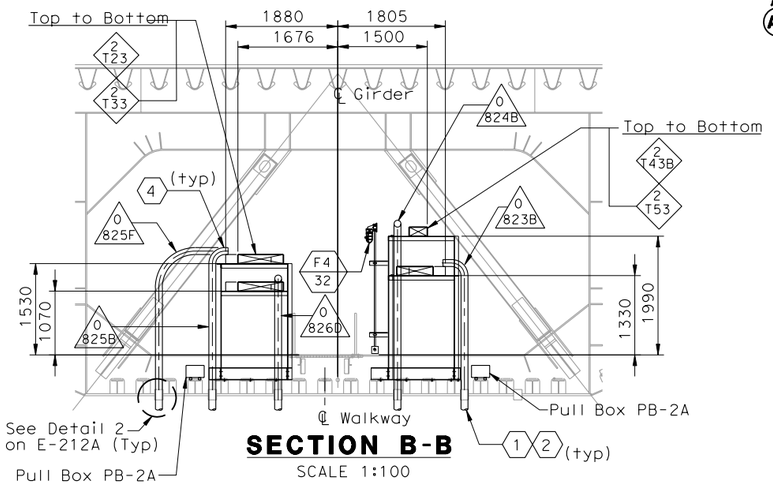

SECTION B-B

SCALE 1:100

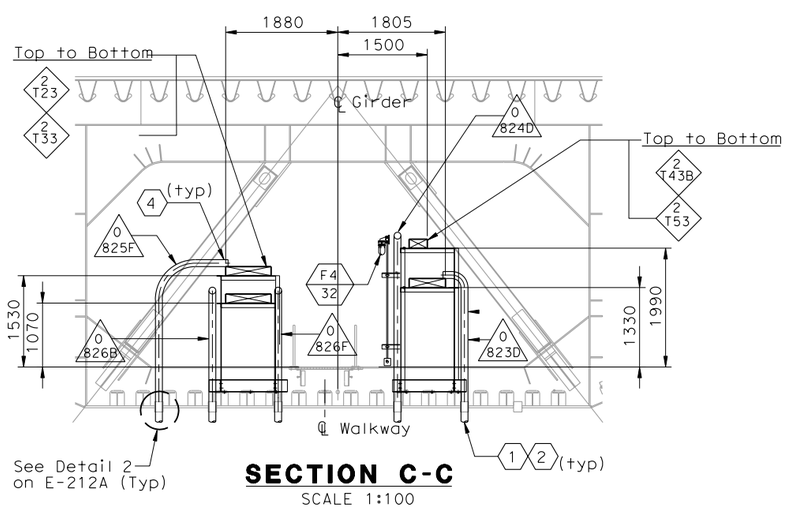

SECTION C-C

SCALE 1:100

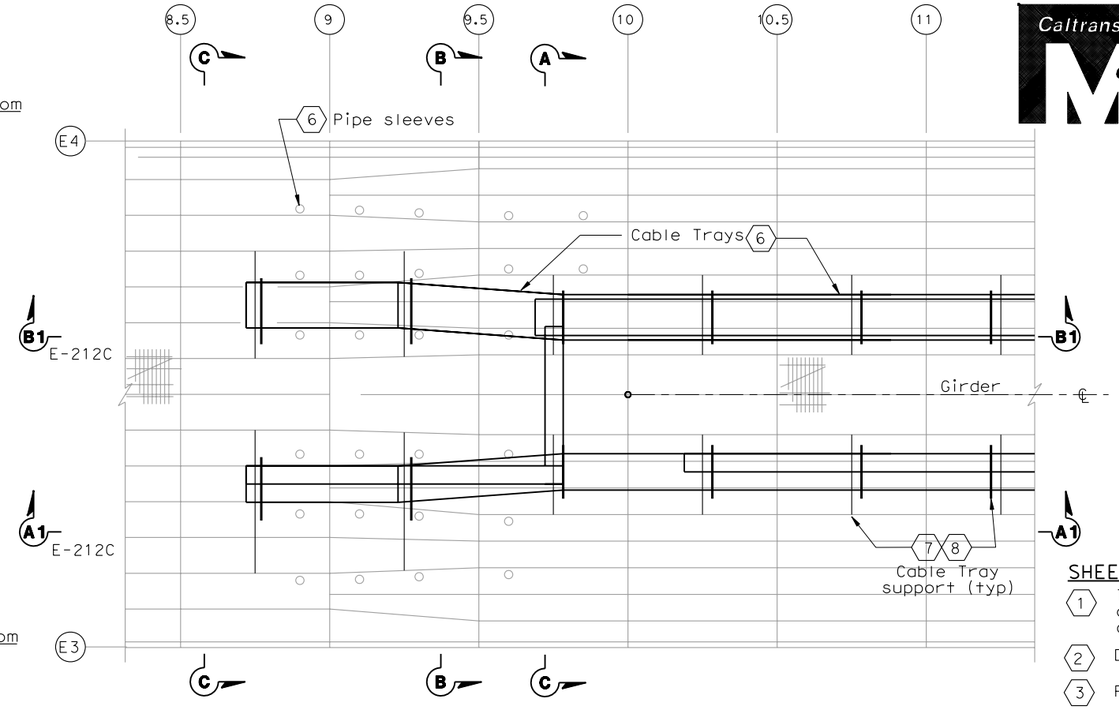

CABLE TRAY SUPPORT LOCATION-PLAN

SCALE 1:100

TABLE A (6)

Tray Number (Below Structure)	Conduit number Pipe Sleeve no. (Inside Girder)	Tray Number (Inside Girder)
2 T14 — 15 KV	0 822A, SP, SP, SP 100 101 102 103	To PB-3A Pull Box
2 T54 — Non-Caltrans Uitilities	0 824A, 0 824B, 0 824C, 0 824D 108 109 110 111	2 T53
2 T49 — TOS/COM	0 823A, 0 823B, 0 823C, 0 823D 104 105 106 107	2 T43A, 2 T43B, 2 T43
2 T29 — 600 V	0 825A, 0 825B, 0 825C, 0 825D, 0 825E, 0 825F 116 117 120 121 122 123	2 T23
2 T39 — 600 V	0 826A, 0 826B, 0 826C, 0 826D, 0 826E, 0 826F 118 119 112 113 114 115	2 T33
	-, - F10 F11	

SHEET NOTES:

1. To prevent moisture from entering inside the conduit, Contractor to seal the end of conduit after cables are pulled.
2. Down to pull box, for details see sheet E-212.
3. Provide drop out cable tray.
4. Provide insulated ground bushing at end of conduit.
5. 15 KV splice box is bolted to longitudinal shear plate and installed by field.
6. For cable trays inside girder, pipe sleeves, see sheet E-212A. The cable cable trays below W2 cap beam, see sheet E-212.
7. The Contractor to provide cable tray hold down clamps.
8. For cable tray support see AS-16K.

NOTES:

1. References:
   - For circuit and conduit/cable tray schedules, see sheets starting at E-401.
2. (SP) Denotes spare pipe sleeve for 103 mm conduit. Contractor to provide threaded cap at exterior end (Unless Otherwise Noted).
3. For cable tray support details, see AS sheets.
4. Cable tray fittings shall be 610 radius.

REQUEST FOR INFORMATION NOT ADDRESSED IN THIS CCO REMAIN IN FORCE

MARK	DATE	DESCRIPTIONS	BY	CH'D	CCO#
0	02/25/08	CABLE TRAY CHANGES	TW MP	RG SE	42S1

REVISIONS

CONTRACT CHANGE ORDER NO._____
SHEET _____ OF _____

DETAILS
SAS SUPERSTRUCTURE GIRDER EASTBOUND CABLE TRAY AND CONDUIT AT PIER W2E

SCALE AS NOTED

E-212B

DESIGN OVERSIGHT — BEHZAD GOLEMOHAMMADI

CALCULATED/DESIGNED BY — CHECKED BY

DATE — REVISED BY — DATE REVISED

STATE OF CALIFORNIA - DEPARTMENT OF TRANSPORTATION — Caltrans

THIS PLAN ACCURATE FOR ELECTRICAL WORK ONLY.

ALL DIMENSIONS ARE IN MILLIMETERS UNLESS OTHERWISE SHOWN

FOR REDUCED PLANS ORIGINAL SCALE IS IN MILLIMETERS 0 20 40 60 80

DGN FILE =>T:\13103\MS\pse\SAS Struc\CCO\SAS CCO42S1\04-0120f1_0235S02.dgn
USERNAME =>llorico

CU 04251 — EA 0120F1

LAST REVISION 00-00-00 — DATE PLOTTED => 4/18/2008 TIME PLOTTED => 5:20:18 PM