DIST	COUNTY	ROUTE	KILOMETER POST TOTAL PROJECT	SHEET No	TOTAL SHEETS
04	SF	80	13.2/13.9	104 S5	1204

REGISTERED ELECTRICAL ENGINEER 2/22/08 DATE

PLANS APPROVAL DATE

REGISTERED PROFESSIONAL ENGINEER S. A. ESTOQUE, JR. No. E-10151 Exp. 12/31/2008 ELECTRICAL STATE OF CALIFORNIA

PB AMERICAS, Inc.
A Parsons Brinckerhoff Company
303 Second St., Suite 700N
San Francisco, CA 94107-1317

The State of California or its officers or agents shall not be responsible for the accuracy or completeness of electronic copies of this plan sheet.

Caltrans now has a web site! To get to the web site, go to http://www.dot.ca.gov

Caltrans Metric

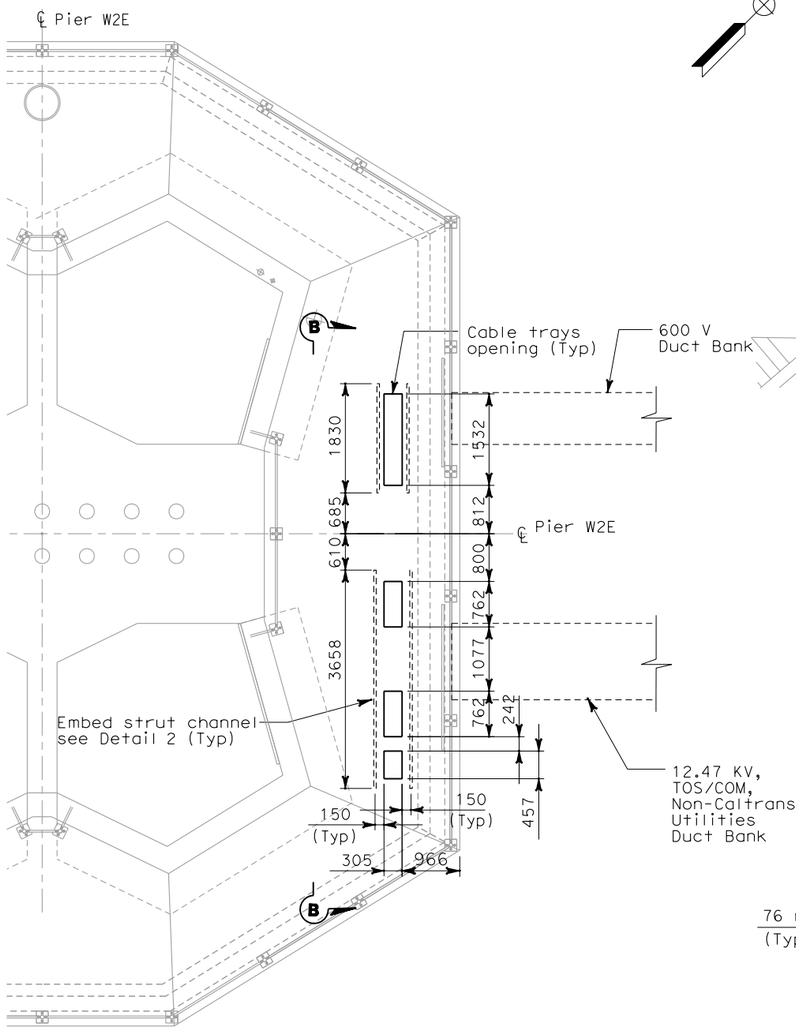

CABLE TRAY OPENING AND CONCRETE INSERT CHANNEL

PLAN AT PIER W2E
SCALE: 1:50

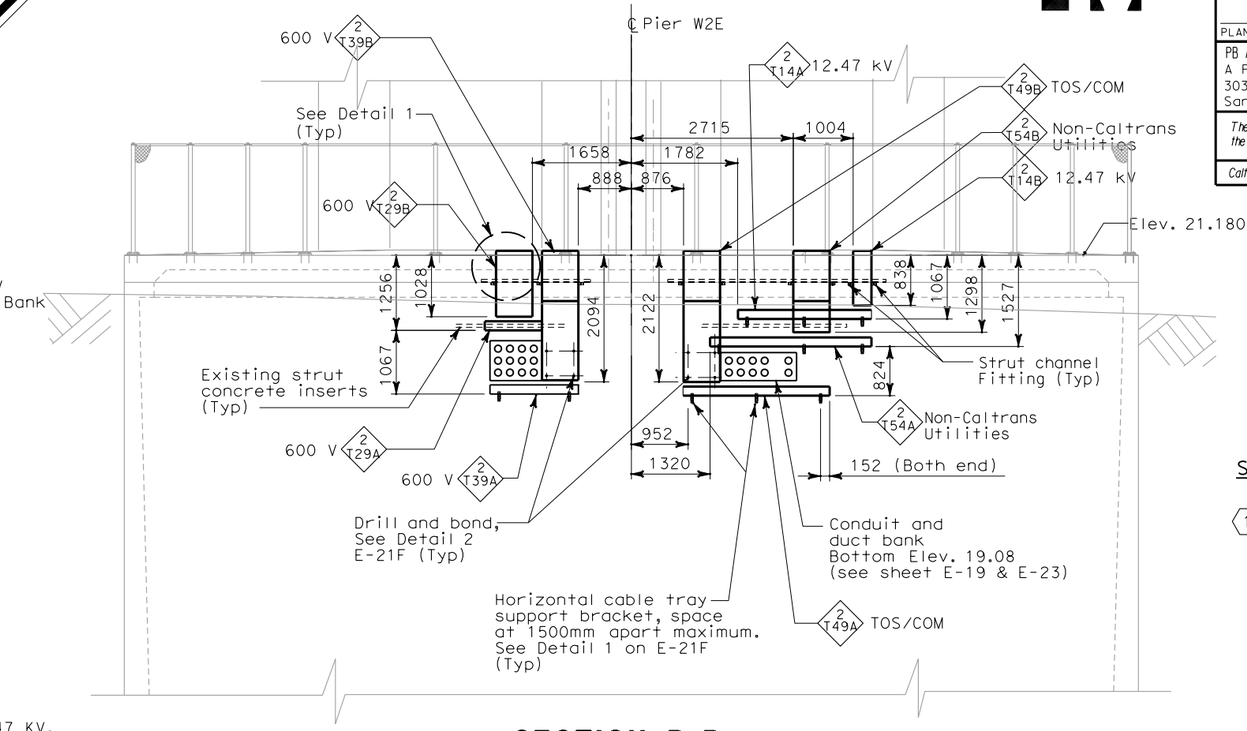

SECTION B-B

SCALE: 1:50

SHEET NOTE:

(1) For fill-in material between cable tray and concrete, See Structures.

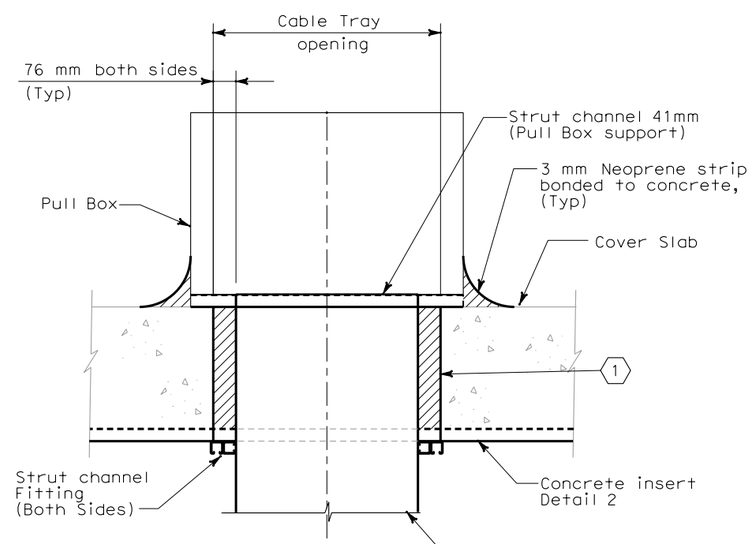

DETAIL 1

SCALE: 1:10

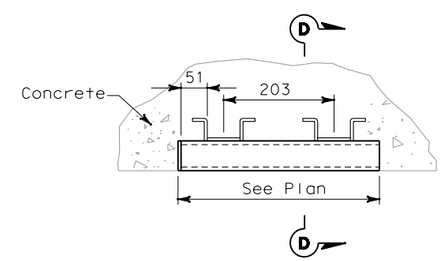

DETAIL 2 CEILING MOUNT

NO SCALE

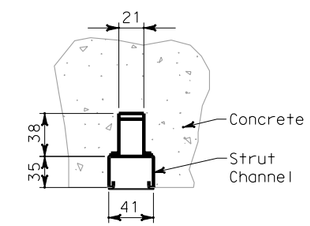

SECTION D-D

NO SCALE

DETAILS
UNDERGROUND
PIER W2E PLANS AND SECTIONS

SCALE AS NOTED

REQUEST FOR INFORMATION NOT ADDRESSED IN THIS CCO REMAIN IN FORCE					
0	02/25/08	CABLE TRAY CHANGES	TW	RG SE	42S1
MARK	DATE	DESCRIPTIONS	BY	CH'D	CCO#
REVISIONS					

CONTRACT CHANGE ORDER NO. _____
SHEET _____ OF _____

THIS PLAN IS ACCURATE FOR ELECTRICAL WORK ONLY.

ALL DIMENSIONS ARE IN MILLIMETERS UNLESS OTHERWISE SHOWN.

DATE	REVISED BY
07/07	TW
07/07	EJL

CALCULATED/DESIGNED BY
CHECKED BY

DESIGN OVERSIGHT
BEHZAD GOLEMOHAMMADI

STATE OF CALIFORNIA - DEPARTMENT OF TRANSPORTATION
Caltrans

E-21E

LAST REVISION 00-00-00
DATE PLOTTED => 4/18/2008
TIME PLOTTED => 5:28:10 PM

FOR REDUCED PLANS ORIGINAL SCALE IS IN MILLIMETERS 0 20 40 60 80

DGN FILE =>T:\13103\MS\pse\SAS Struc\CCO\SAS CCO42S1\04-0120f1_0104S05.dgn
USERNAME =>garciar

CU 04251

EA 0120F1