DIST	COUNTY	ROUTE	KILOMETER POST TOTAL PROJECT	SHEET No	TOTAL SHEETS
04	SF	80	13.2/13.9	103 S6	1204

REGISTERED ELECTRICAL ENGINEER — DATE 2/22/08

REGISTERED PROFESSIONAL ENGINEER S. A. ESTOQUE, JR. No. E-10151 Exp. 12/31/2008 ELECTRICAL STATE OF CALIFORNIA

PLANS APPROVAL DATE

PB AMERICAS, Inc.
A Parsons Brinckerhoff Company
303 Second St., Suite 700N
San Francisco, CA 94107-1317

The State of California or its officers or agents shall not be responsible for the accuracy or completeness of electronic copies of this plan sheet.

Caltrans now has a web site! To get to the web site, go to http://www.dot.ca.gov

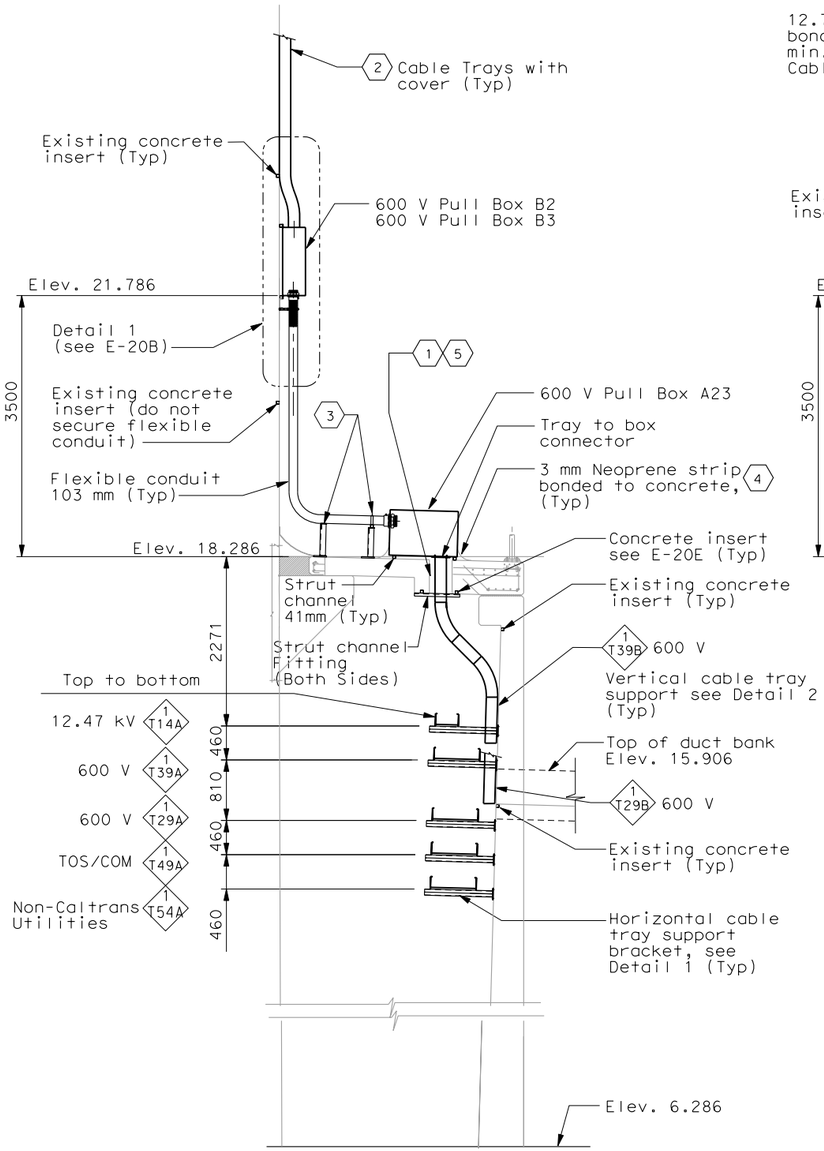

SECTION C-C 6

SCALE: 1:20

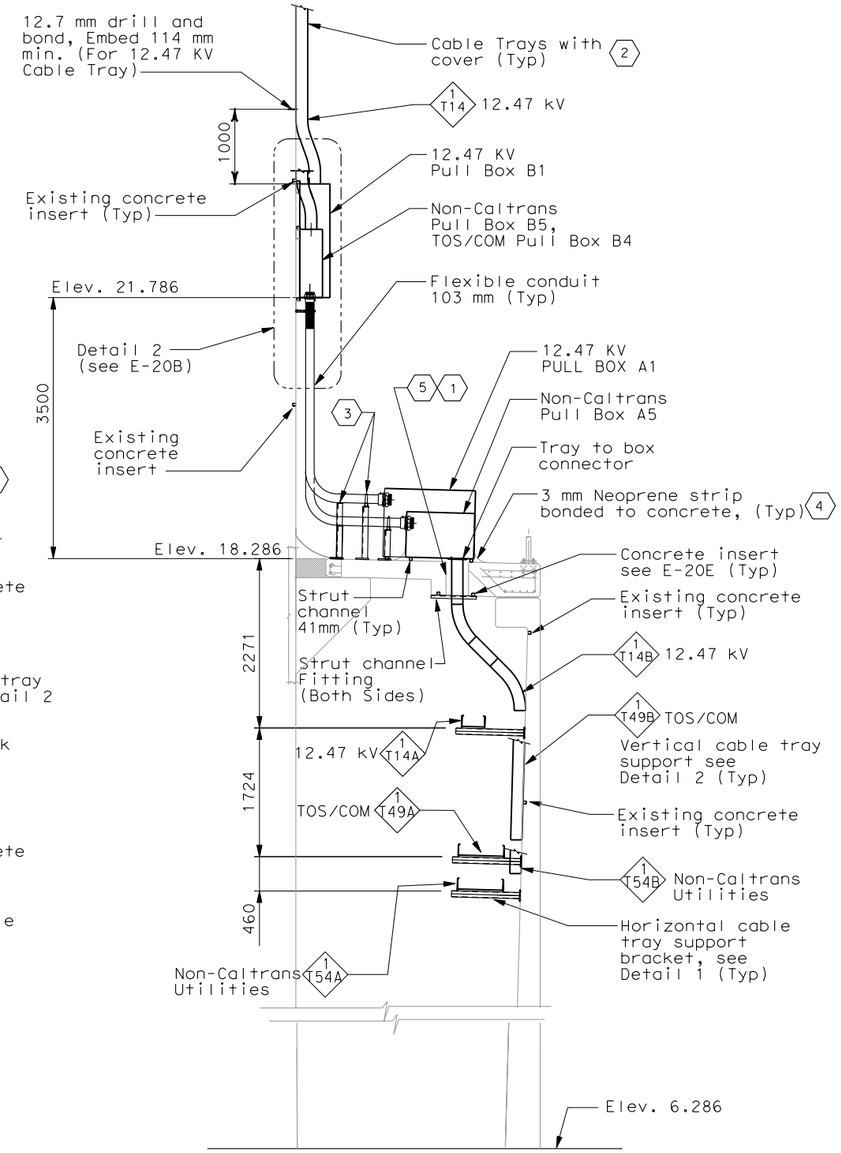

SECTION D-D 6

SCALE: 1:20

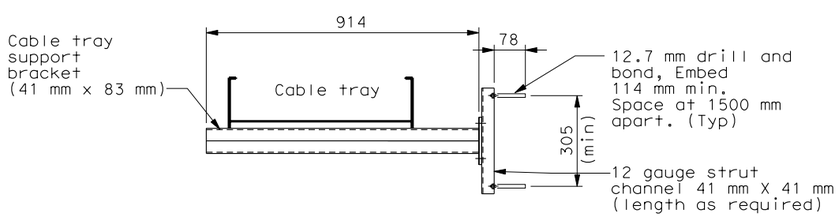

HORIZONTAL CABLE TRAY SUPPORT BRACKET

DETAIL 1

NO SCALE

REQUEST FOR INFORMATION NOT ADDRESSED IN THIS CCO REMAIN IN FORCE					
0	02/25/08	CABLE TRAY CHANGES	RG	SE	42S1
MARK	DATE	DESCRIPTIONS	BY	CH'D	CCO#
		REVISIONS			

CONTRACT CHANGE ORDER NO._____
SHEET _____ OF _____

NOTES:

1. References:
   - For duct bank and manhole plan, see sheet E-11.
   - For duct bank section, see sheet E-19.
   - For circuit and conduit/cable tray schedules, see sheets starting at E-401.
   - For foundation grounding, see sheet E-22.
   - For grounding interface, see sheet E-18.
   - For duct bank elevations at W2W, see sheet E-23.

SHEET NOTES:

1. For fill-in material between cable tray and concrete, see Structures.
2. For continuation see E-128.
3. For conduit support see E-20D.
4. The contractor to provide water tight seal after cables are pulled.
5. For embed strut channel and cable tray opening location at pier W2 cover slab see E-20E.
6. Section C-C and Section D-D see sheet E-20.

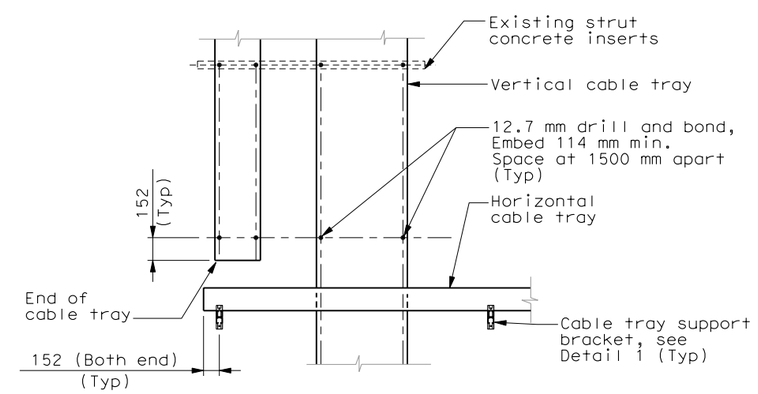

VERTICAL CABLE TRAY SUPPORT

DETAIL 2

NO SCALE

DETAILS
UNDERGROUND
PIER W2W SECTIONS AND DETAIL

SCALE AS NOTED

E-20F

ALL DIMENSIONS ARE IN MILLIMETERS UNLESS OTHERWISE SHOWN.

FOR REDUCED PLANS ORIGINAL SCALE IS IN MILLIMETERS 0 20 40 60 80

DGN FILE =>T:\13103\MS\pse\SAS Struc\CCO\SAS CC042S1\04-0120f1_d103S06.dgn
USERNAME =>garciar

CU 04251 | EA 0120F1

STATE OF CALIFORNIA - DEPARTMENT OF TRANSPORTATION
Caltrans

DESIGN OVERSIGHT
BEHZAD GOLEMOHAMMADI

CALCULATED/ DESIGNED BY	TW	DATE 7/07	REVISED BY
CHECKED BY	EJL	07/07	DATE REVISED

LAST REVISION 00-00-00
DATE PLOTTED => 4/18/2008
TIME PLOTTED => 5:25:02 PM