| DIST | COUNTY | ROUTE | KILOMETER POST TOTAL PROJECT | SHEET No | TOTAL SHEETS |
|---|---|---|---|---|---|
| 04 | SF | 80 | 13.2/13.9 | 86S2 | 1204 |

REGISTERED CIVIL ENGINEER 2/22/08 DATE

PLANS APPROVAL DATE

REGISTERED PROFESSIONAL ENGINEER Lawrence M. Johnson No. C 44006 Exp. 6/30/09 CIVIL STATE OF CALIFORNIA

*The State of California or its officers or agents shall not be responsible for the accuracy or completeness of electronic copies of this plan sheet.*

Parsons Brinckerhoff Quade & Douglas, Inc.
303 Second Street, Suite 700N
San Francisco, CA 94107

*Caltrans now has a web site! To get to the web site, go to: http://www.dot.ca.gov*

| REQUEST FOR INFORMATION NOT ADDRESSED IN THIS CCO REMAIN IN FORCE | | | | | |
|---|---|---|---|---|---|
| 0 | 02/25/08 | CABLE TRAY CHANGES | TW | LMJ | 42S1 |
| MARK | DATE | DESCRIPTIONS | BY | CH'D | CCO# |
| REVISIONS | | | | | |

CONTRACT CHANGE ORDER NO._____
SHEET _____ OF _____

## NOTES:

1. For structural notes, see sheet AS-1.
2. For cable tray support locations, see electrical plans and dwgs AS-16K and AS-R.

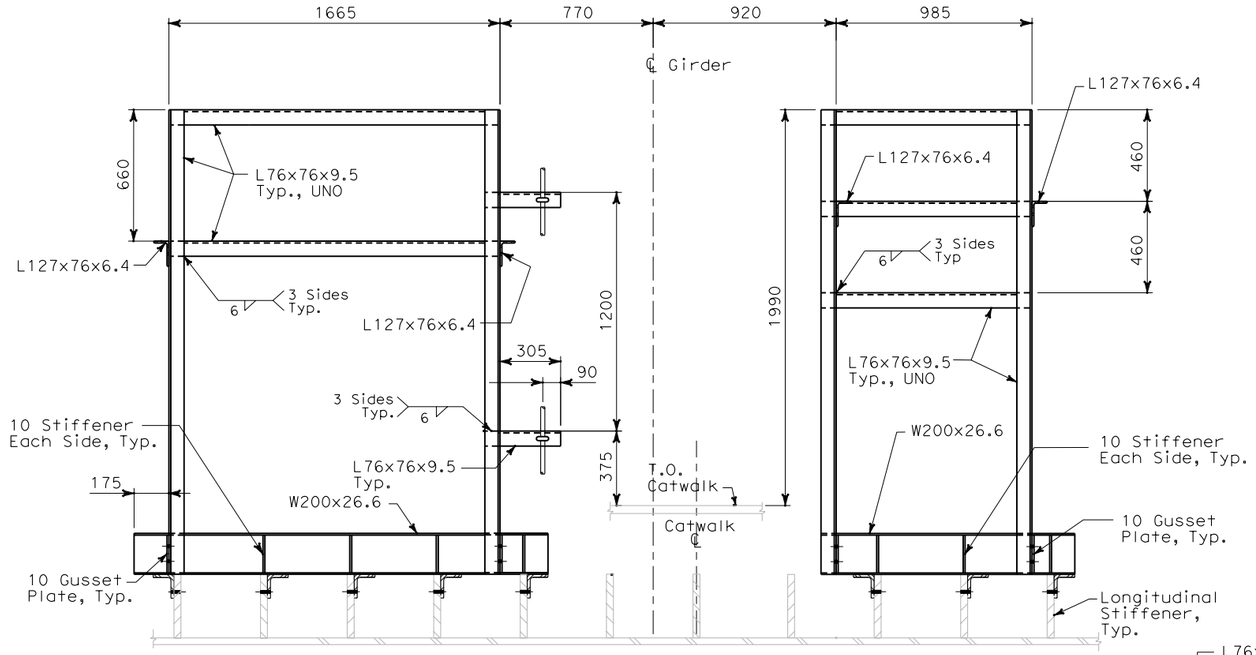


**C** AS-16A **SECTION**
SCALE: 1:15

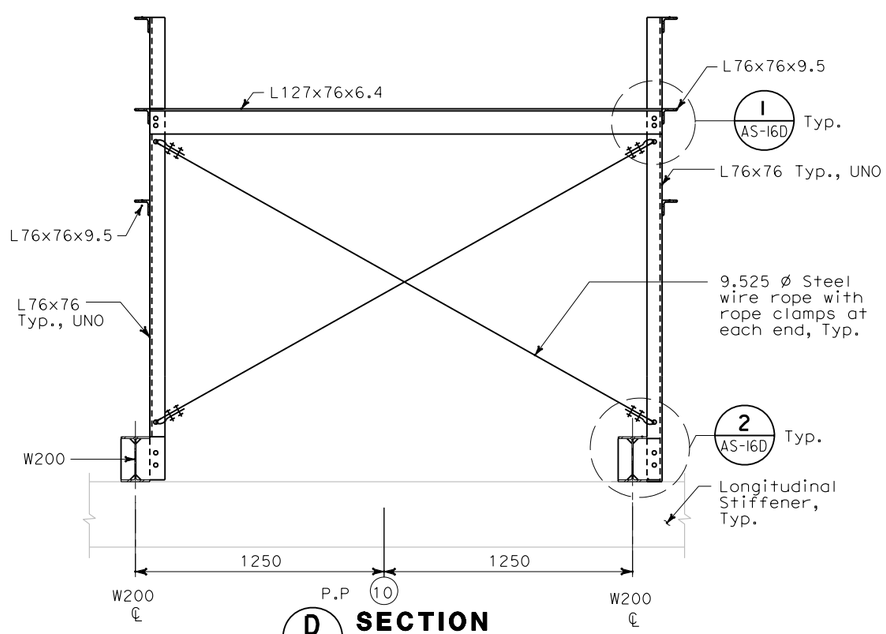


**D** AS-16A **SECTION**
SCALE: 1:15

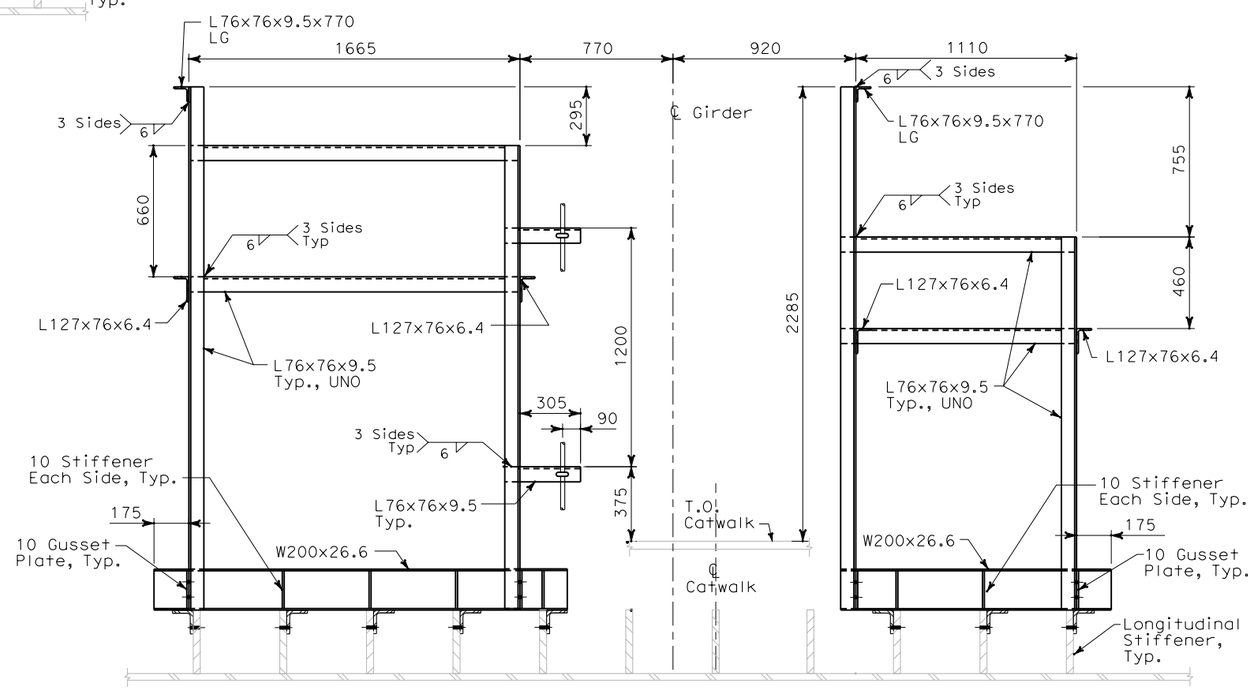


**E** AS-16A **SECTION**
SCALE: 1:15

ALL DIMENSIONS ARE IN
MILLIMETERS UNLESS OTHERWISE SHOWN

Bob Zandipour
DESIGN OVERSIGHT

SIGN OFF DATE

| | BY | CHECKED |
|---|---|---|
| DESIGN | L. Johnson | M. S. Owyang |
| DETAILS | A. Antonio | L. Johnson |
| QUANTITIES | L. Johnson | P. McNamee |

**PREPARED FOR THE STATE OF CALIFORNIA DEPARTMENT OF TRANSPORTATION**

Brady Nadell
PROJECT ENGINEER

BRIDGE NO. 34-0006
KILOMETER POST 13.2/13.9

# SAS SUPERSTRUCTURE

## WESTBOUND CABLE TRAY SUPPORT DETAILS AT PP 9 AND PP 10 - SHEET 2 OF 4

**AS-16B**

DISREGARD PRINTS BEARING EARLIER REVISION DATES

REVISION DATES (PRELIMINARY STAGE ONLY)

SHEET 16B OF 16

DESIGN DETAIL SHEET (METRIC) (REV. 3/1/98)

ORIGINAL SCALE IN MILLIMETERS FOR REDUCED PLANS 0 10 20 30 40 50 60 70 80 90 100

CU 04251
EA 0120F1

FILE => T:\13103\MS\pse\SAS Struc\CCO\SAS CC042S1\04-0120f1_0086S02.dgn

$FREQUEST

USERNAME => garcilar DATE PLOTTED => 4/18/2008 TIME PLOTTED => 5:12:15 PM