DIST	COUNTY	ROUTE	KILOMETER POST TOTAL PROJECT	SHEET No	TOTAL SHEETS
04	SF	80	13.2/13.9	178 S2	1204

REGISTERED ELECTRICAL ENGINEER — 2/22/08 DATE

PLANS APPROVAL DATE

REGISTERED PROFESSIONAL ENGINEER S. A. ESTOQUE, JR. No. E-10151 Exp. 12/31/2008 ELECTRICAL STATE OF CALIFORNIA

PB AMERICAS, Inc.
A Parsons Brinckerhoff Company
303 Second St., Suite 700N
San Francisco, CA 94107-1317

The State of California or its officers or agents shall not be responsible for the accuracy or completeness of electronic copies of this plan sheet.

Caltrans now has a web site! To get to the web site, go to http://www.dot.ca.gov

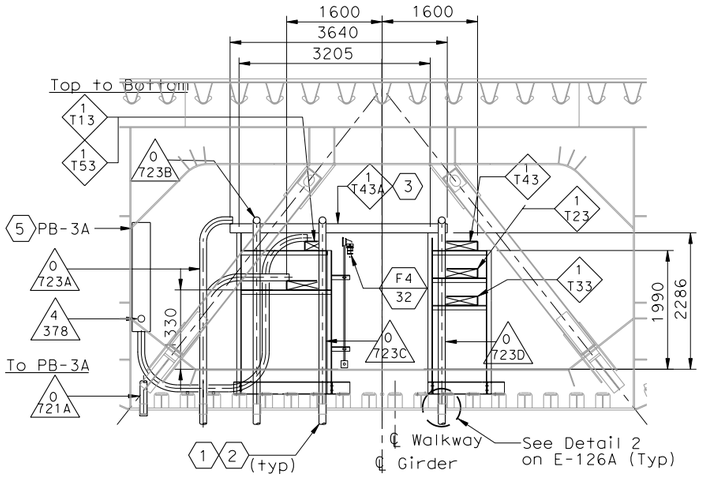

SECTION A-A
SCALE 1:100

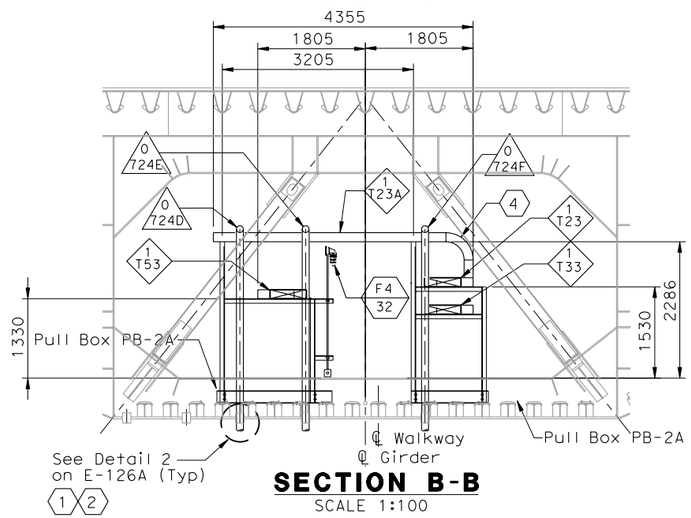

SECTION B-B
SCALE 1:100

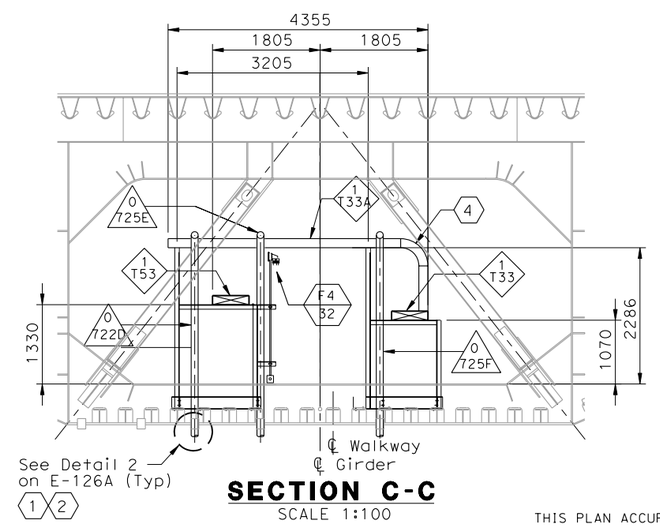

SECTION C-C
SCALE 1:100

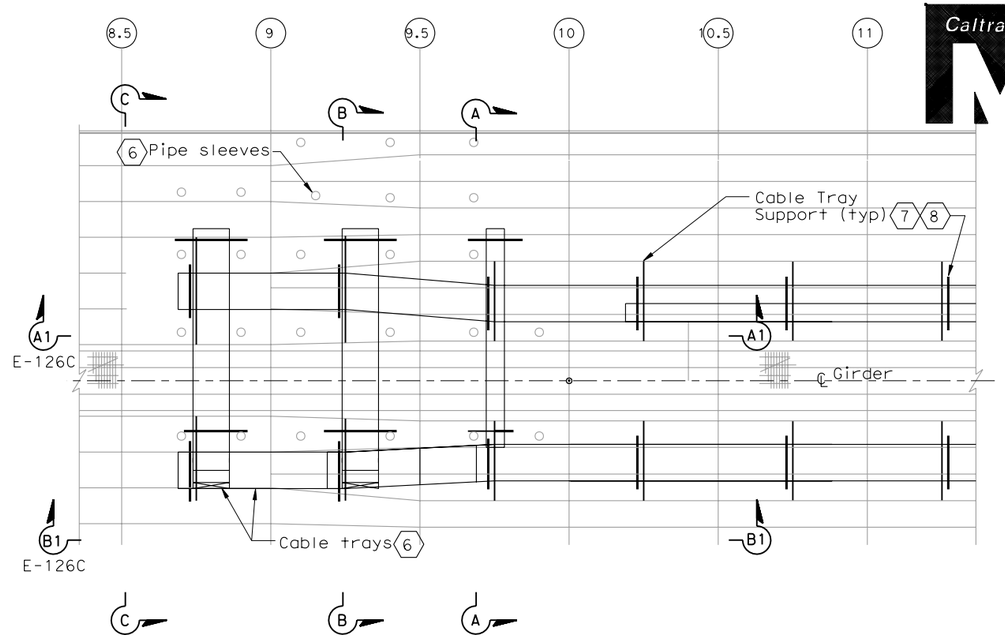

CABLE TRAY SUPPORT LOCATION-PLAN
SCALE 1:100

TABLE A 6

Tray Number (Below Structure)	Conduit number Pipe Sleeve no. (Inside Girder)	Tray Number (Inside Girder)
T14 15 KV	721A SP SP 71 72 73	To PB-3A Pull Box
T54 Non-Caltrans Uitilities	722A 72B 722C 722D 75 76 77 78	T53 Non-Caltrans Uitilities
T49 TOS/COM	723A 723B 723C 723D 74 79 84 89	T43A T43 TOS/COM
T29 600 V	724A 724B 724C 724D 724E 724F 80 85 90 81 86 91	T23A T23 600 V
T39 600 V	725A 725B 725C 725D 725E 725F 82 87 92 83 88 93	T33A T33 600 V
	- - F1 F2	

SHEET NOTES:

1. To prevent moisture from entering inside the conduit, Contractor to seal the end of conduit after cables are pulled.
2. Down to cable tray, for details see sheet E-126.
3. Provide drop out tray fitting.
4. Provide vertical bend segment type fitting. Fittting radius shall be 305 mm.
5. 15 KV splice box is bolted to longitudinal shear plate and installed by field.
6. For cable trays inside girder, pipe sleeves see sheet E-126A. The cable trays below W2 girder see sheet E-126.
7. The Contractor to provide cable tray hold down clamps.
8. For cable support see AS-16K

NOTES:

1. References:
   - For circuit and conduit/cable tray schedules, see sheets starting at E-401.
2. (SP) Denotes spare pipe sleeve for 103 mm conduit. Contractor to provided cap at exterior end.
3. For cable tray supports details, see AS sheets.
4. Cable trays fittings shall be 610 radius.

REQUEST FOR INFORMATION NOT ADDRESSED IN THIS CCO REMAIN IN FORCE

MARK	DATE	DESCRIPTIONS	BY	CH'D	CCO#
0	02/25/08	CABLE TRAY CHANGES	TW	RG SE	42S1

REVISIONS

CONTRACT CHANGE ORDER NO._____
SHEET _____ OF _____

DETAILS
SAS SUPERSTRUCTURE GIRDER WESTBOUND CABLE TRAY AND CONDUIT AT PIER W2W
SCALE AS NOTED

THIS PLAN ACCURATE FOR ELECTRICAL WORK ONLY.

ALL DIMENSIONS ARE IN MILLIMETERS UNLESS OTHERWISE SHOWN

E-126B

STATE OF CALIFORNIA - DEPARTMENT OF TRANSPORTATION

DESIGN OVERSIGHT: BEHZAD GOLEMOHAMMADI

CALCULATED/DESIGNED BY | CHECKED BY | DATE | REVISED BY | DATE REVISED

LAST REVISION 00-00-00 | DATE PLOTTED => 2/26/2008 | TIME PLOTTED => 1:38:13 PM

FOR REDUCED PLANS ORIGINAL SCALE IS IN MILLIMETERS 0 20 40 60 80

DGN FILE =>T:\13103\MS\pse\SAS Struc\CCO\SAS CC042S1\04-0120f1_0178S02.dgn
USERNAME =>kurnovskaya

CU 04251 | EA 0120F1