DIST	COUNTY	ROUTE	KILOMETER POST TOTAL PROJECT	SHEET No	TOTAL SHEETS
04	SF	80	13.2/13.9	103 S4	1204

REGISTERED ELECTRICAL ENGINEER — DATE 2/22/08

PLANS APPROVAL DATE

REGISTERED PROFESSIONAL ENGINEER S. A. ESTOQUE, JR. No. E-10151 Exp. 12/31/2008 ELECTRICAL STATE OF CALIFORNIA

PB AMERICAS, Inc.
A Parsons Brinckerhoff Company
303 Second St., Suite 700N
San Francisco, CA 94107-1317

The State of California or its officers or agents shall not be responsible for the accuracy or completeness of electronic copies of this plan sheet.

Caltrans now has a web site! To get to the web site, go to http://www.dot.ca.gov

Caltrans Metric

SHEET NOTES:

1. For pull box sizes and opening see E-20C.
2. For pull box location see E-20.
3. Do not secure flexible conduit at this location.
4. Hardwares and conponents are for strut channels.

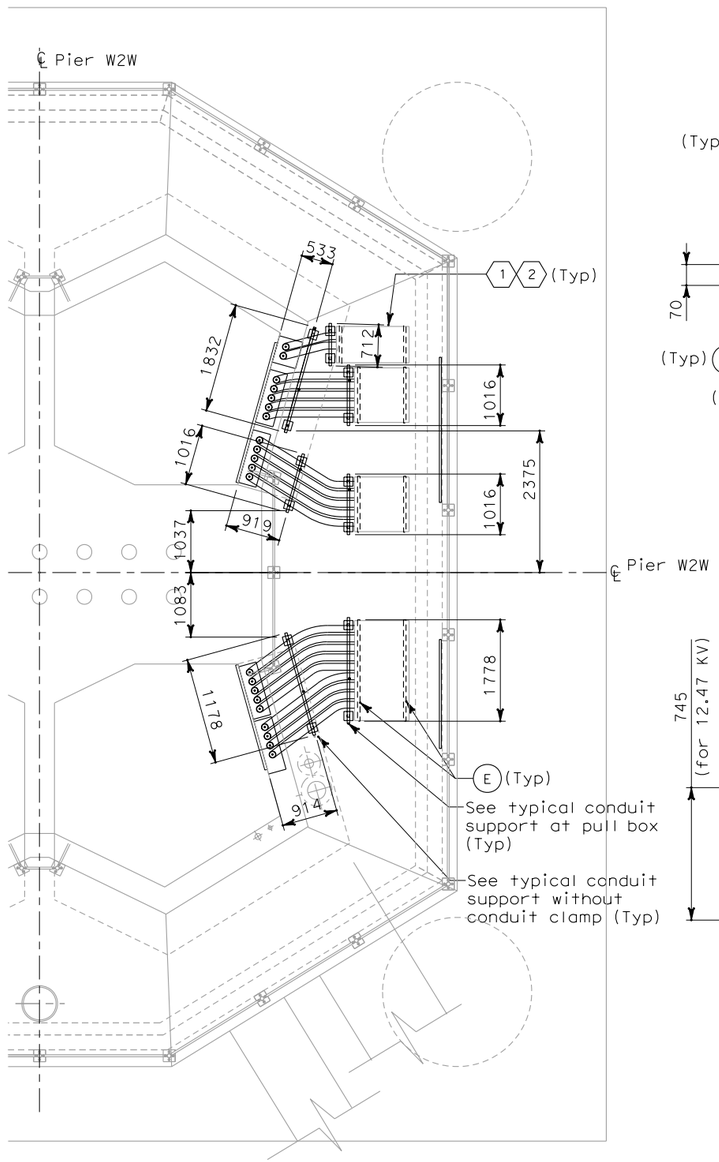

CONDUIT SUPPORT AT GRADE

PLAN AT PIER W2W
SCALE 1:50

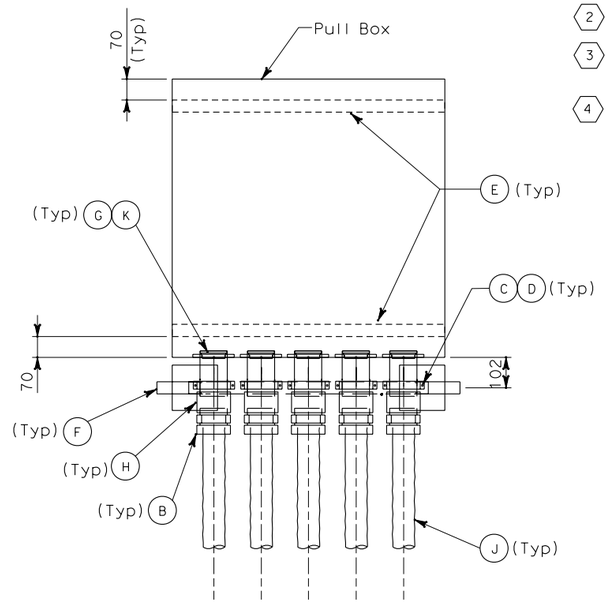

TOP VIEW

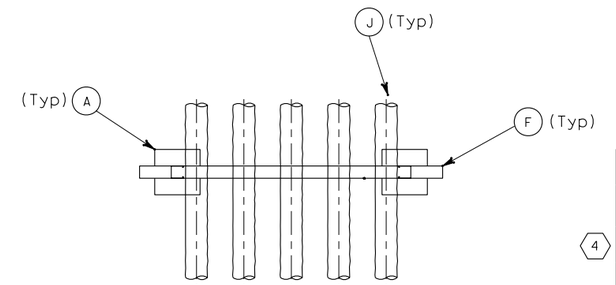

TOP VIEW

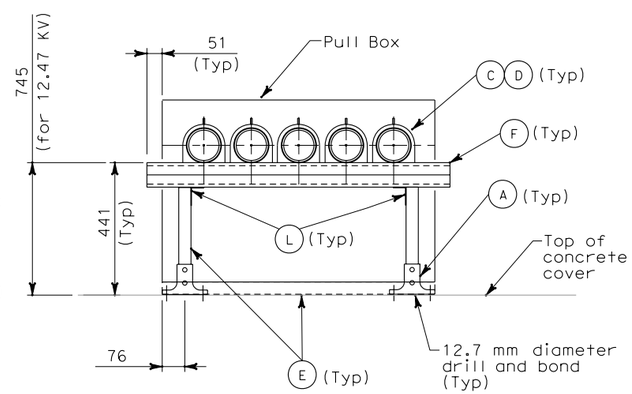

FRONT VIEW

TYPICAL CONDUIT SUPPORT AT PULL BOX

SCALE 1:40

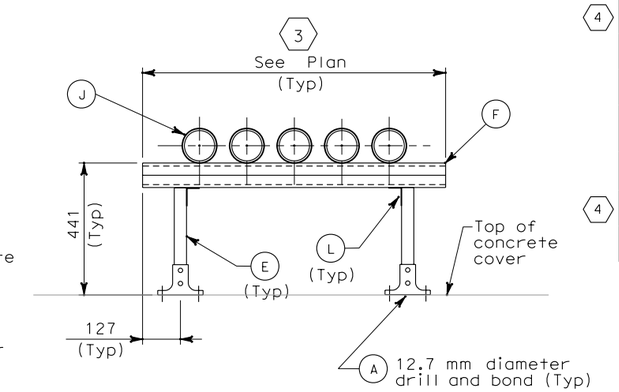

FRONT VIEW

TYPICAL CONDUIT SUPPORT WITHOUT CONDUIT CLAMP

SCALE 1:40

MATERIAL LIST

	Item No.	Description
4	A	Strut Post Base 152mm x 152mm.
	B	Connector, straight liquidtight flexible metal conduit for 103 mm
4	C	Strut channel spring nut, lockwasher and hex bolt (41mm)
4	D	Strut channel conduit clamp for 103 mm
4	E	Strut channel 41 mm x 41 mm
4	F	Strut channel 41.3 mm x 82.6mm
	G	Conduit nipple, 152 mm long
	H	Conduit coupling, 103 mm
	J	Liquidtight flexible metal conduit, 103 mm
	K	Insulated ground bushing for 103 mm conduit
4	L	90 Degree angle fitting

REQUEST FOR INFORMATION NOT ADDRESSED IN THIS CCO REMAIN IN FORCE

MARK	DATE	DESCRIPTIONS	BY	CH'D	CCO#
0	02/25/08	CABLE TRAY CHANGES	TW	RG SE	42S1

REVISIONS

CONTRACT CHANGE ORDER NO._____
SHEET _____ OF _____

DETAILS
UNDERGROUND
PIER W2W PLANS AND SECTIONS

SCALE AS NOTED

E-20D

THIS PLAN IS ACCURATE FOR ELECTRICAL WORK ONLY.

DATE	REVISED BY
7/07	TW
7/07	EJL

DATE REVISED

CALCULATED/DESIGNED BY — CHECKED BY

DESIGN OVERSIGHT — BEHZAD GOLEMOHAMMADI

STATE OF CALIFORNIA - DEPARTMENT OF TRANSPORTATION — Caltrans

FOR REDUCED PLANS ORIGINAL SCALE IS IN MILLIMETERS 0 20 40 60 80

DGN FILE =>T:\13103\MS\pse\SAS Struc\CCO\SAS CC042S1\04-0120f1_0103S04.dgn
USERNAME =>kurnovskaya

CU 04251 — EA 0120F1

LAST REVISION 00-00-00 — DATE PLOTTED => 2/26/2008 TIME PLOTTED => 1:13:50 PM