DIST	COUNTY	ROUTE	KILOMETER POST TOTAL PROJECT	SHEET No	TOTAL SHEETS
04	SF	80	13.2/13.9	86S1	1204

REGISTERED CIVIL ENGINEER 2/22/08 DATE

PLANS APPROVAL DATE

REGISTERED PROFESSIONAL ENGINEER Lawrence M. Johnson No. C 44006 Exp. 6/30/09 CIVIL STATE OF CALIFORNIA

The State of California or its officers or agents shall not be responsible for the accuracy or completeness of electronic copies of this plan sheet.

Parsons Brinckerhoff Quade & Douglas, Inc.
303 Second Street, Suite 700N
San Francisco, CA 94107

Caltrans now has a web site! To get to the web site, go to: http://www.dot.ca.gov

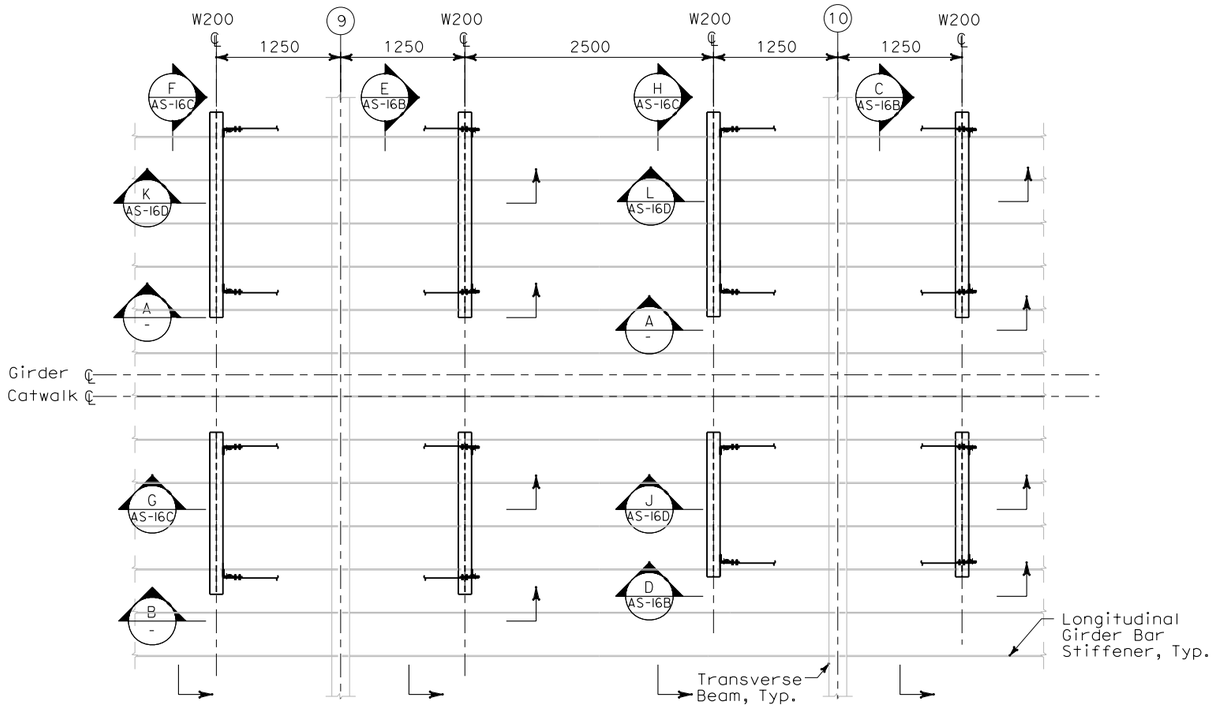

WESTBOUND CABLE SUPPORT PLAN - PANEL POINTS 9 AND 10

SCALE: 1:30

NOTES:

1. For structural notes, see sheet AS-1.
2. For cable tray support locations, see electrical plans and dwgs AS-16K and AS-16R.

REQUEST FOR INFORMATION NOT ADDRESSED IN THIS CCO REMAIN IN FORCE					
0	02/25/08	CABLE TRAY CHANGES	TW	LMJ	42S1
MARK	DATE	DESCRIPTIONS	BY	CH'D	CCO#
REVISIONS					

CONTRACT CHANGE ORDER NO._____
SHEET _____ OF _____

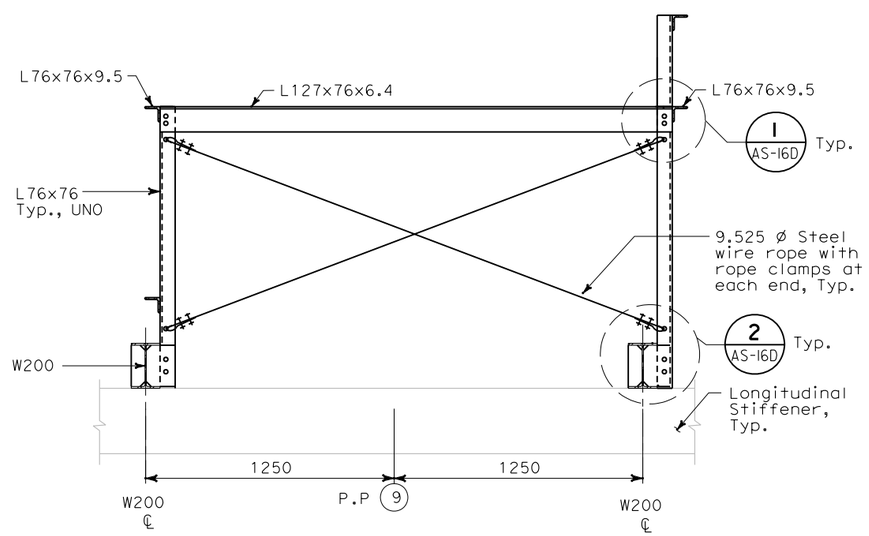

B - SECTION
SCALE: 1:15

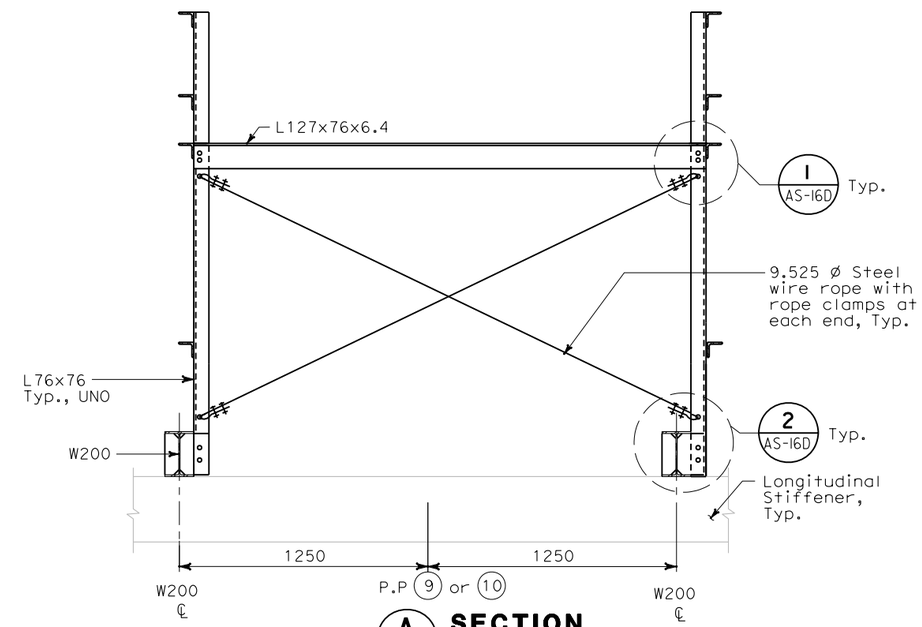

A - SECTION
SCALE: 1:15

ALL DIMENSIONS ARE IN MILLIMETERS UNLESS OTHERWISE SHOWN

Bob Zandipour
DESIGN OVERSIGHT

SIGN OFF DATE

	BY	CHECKED
DESIGN	L. Johnson	M. S. Owyang
DETAILS	A. Antonio	L. Johnson
QUANTITIES	L. Johnson	P. McNamee

PREPARED FOR THE STATE OF CALIFORNIA DEPARTMENT OF TRANSPORTATION

Gene Lusherovich
PROJECT ENGINEER

BRIDGE NO. 34-0006
KILOMETER POST 13.2/13.9

SAS SUPERSTRUCTURE
WESTBOUND CABLE TRAY SUPPORT DETAILS AT PP 9 AND PP 10 - SHEET 1 OF 4

AS-16A

DESIGN DETAIL SHEET (METRIC) (REV. 3/1/98)

ORIGINAL SCALE IN MILLIMETERS FOR REDUCED PLANS 0 10 20 30 40 50 60 70 80 90 100

CU 04251
EA 0120F1

DISREGARD PRINTS BEARING EARLIER REVISION DATES

REVISION DATES (PRELIMINARY STAGE ONLY)

SHEET 16A OF 16

FILE => T:\13103\MS\pse\SAS Struc\CCO\SAS CC042S1\04-0120f1_0086S01.dgn

USERNAME => reyesl DATE PLOTTED => 2/26/2008 TIME PLOTTED => 1:35:30 PM

$FREQUEST