DIST	COUNTY	ROUTE	KILOMETER POST TOTAL PROJECT	SHEET NO	TOTAL SHEETS
04	SF	80	13.2/13.9	166C	1204

REGISTERED ELECTRICAL ENGINEER

PLANS APPROVAL DATE

REGISTERED PROFESSIONAL ENGINEER NO. EXP. ELECTRICAL STATE OF CALIFORNIA

PB POWER, Inc.
A Parsons Brinckerhoff Company
303 Second St., Suite 700N
San Francisco, CA 94107-1317

The State of California or its officers or agents shall not be responsible for the accuracy or completeness of electronic copies of this plan sheet.

Caltrans now has a web site! To get to the web site, go to http://www.dot.ca.gov

Caltrans Metric

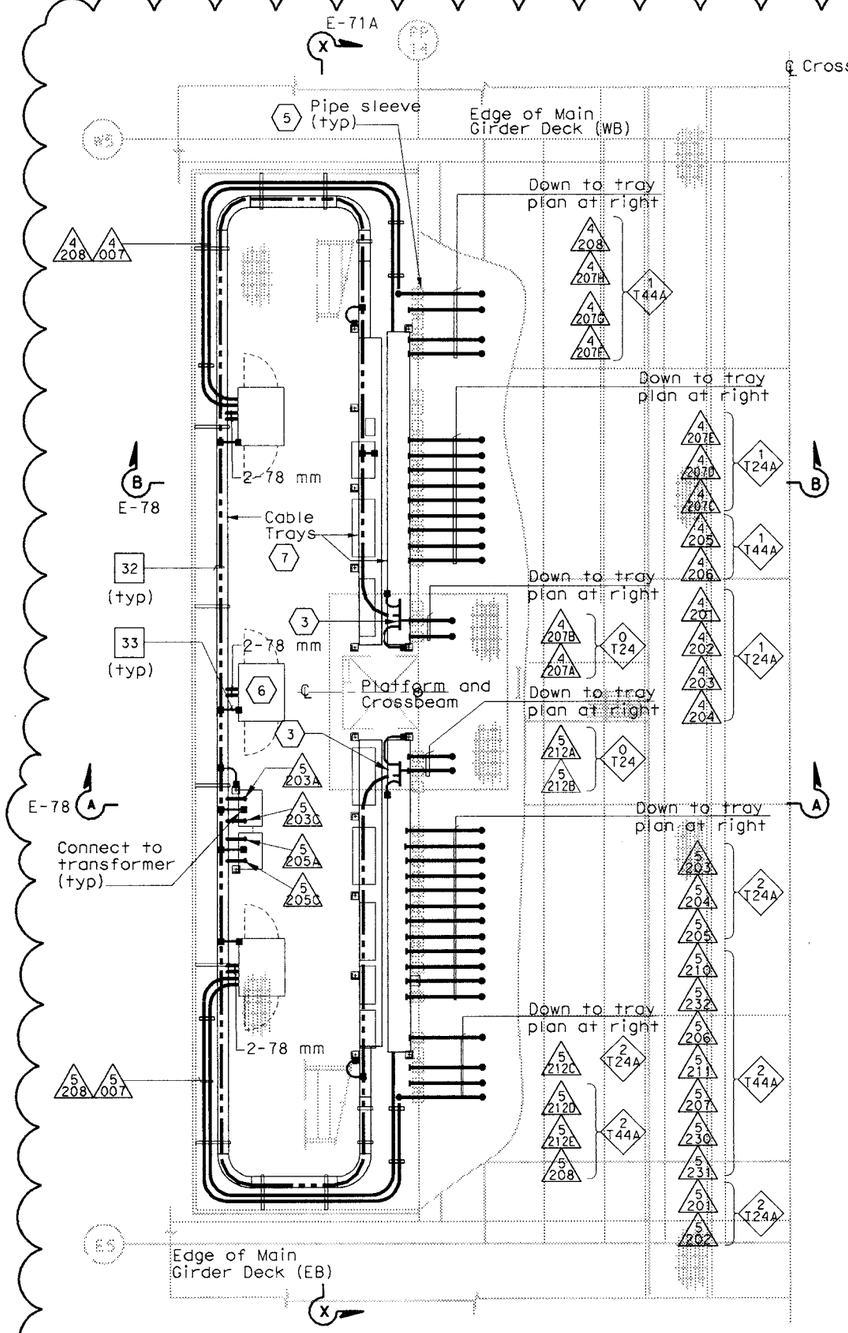

CABLE TRAY AND CONDUIT PLAN AT SERVICE PLATFORM

SCALE 1:40

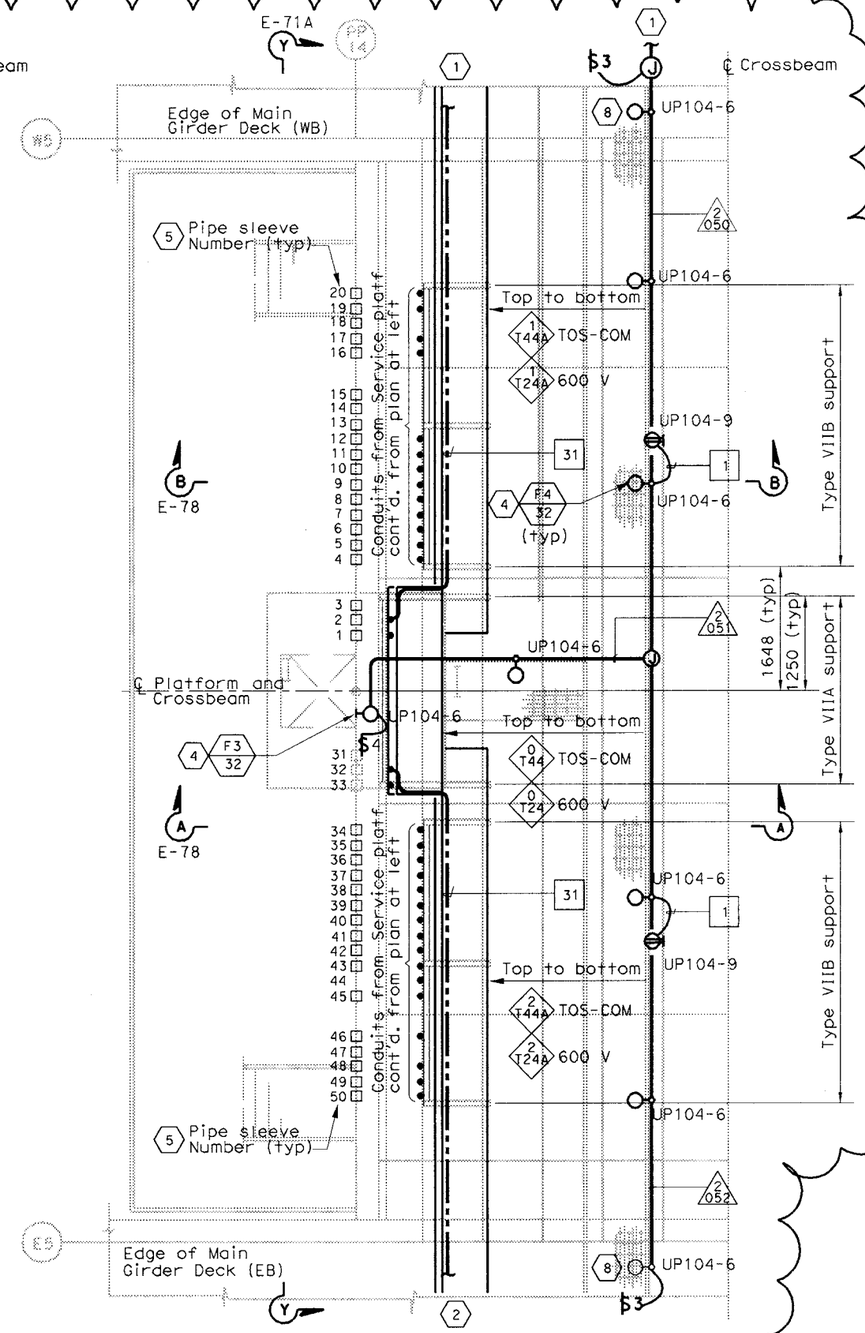

CABLE TRAY AND CONDUIT PLAN INSIDE CROSSBEAM

SCALE 1:40

SHEET NOTES:

1. For continuation inside WB girder, see sheets E-96 and E-114A.
2. For continuation inside EB girder, see sheet E-181 and E-114A.
3. For typical ground bar installation, see Detail 5 sheet E-78.
4. For typical lighting fixture installation see Details 2 and 3, sheet E-123.
5. Pipe sleeve without conduit going through is spare. Contractor to provide plug or cap at both ends. For location see sheet E-71A.
6. TOS-4WB for the temporary mobile CMS. Control cabinet shall remain for future use. U.O.N.
7. For cable tray numbers, see sheet E-71.
8. Locate light fixture approximate half way between girder wall and girder walkway.

NOTES:

1. Reference:
   - For circuit, conduit/cable tray schedules, see sheets starting at E-401.
2. For cable tray support details, AS sheets.
3. For location of pipe sleeves at the utility platform crossbeams, see Typical Crossbeam Details sheets.
4. For platform elevations, see sheet E-71A.

RFI# 451 R00

DETAILS
SAS SUPERSTRUCTURE GIRDER WESTBOUND PLATFORM 4 CONDUIT, LIGHTING AND GROUND PLAN

SCALE AS NOTED

E-114

CALCULATED/DESIGNED BY	FK	DATE 11/02	REVISED BY		
CHECKED BY	IAH	11/02	DATE REVISED		

DESIGN OVERSIGHT: BEHZAD GOLEMOHAMMADI

STATE OF CALIFORNIA - DEPARTMENT OF TRANSPORTATION

Caltrans

THIS PLAN IS ACCURATE FOR ELECTRICAL WORK ONLY.

ALL DIMENSIONS ARE IN MILLIMETERS UNLESS OTHERWISE SHOWN.

FOR REDUCED PLANS ORIGINAL 0 20 40 60 80

DGN FILE =X:\13103\ms\pse\sas struc\rfi\sas rfi 451 - completed. see ccr 34 for revision\166.dgn

LAST REVISION 00-00-00 | DATE PLOTTED =>1/23/2008 TIME PLOTTED =>11:09:51 AM

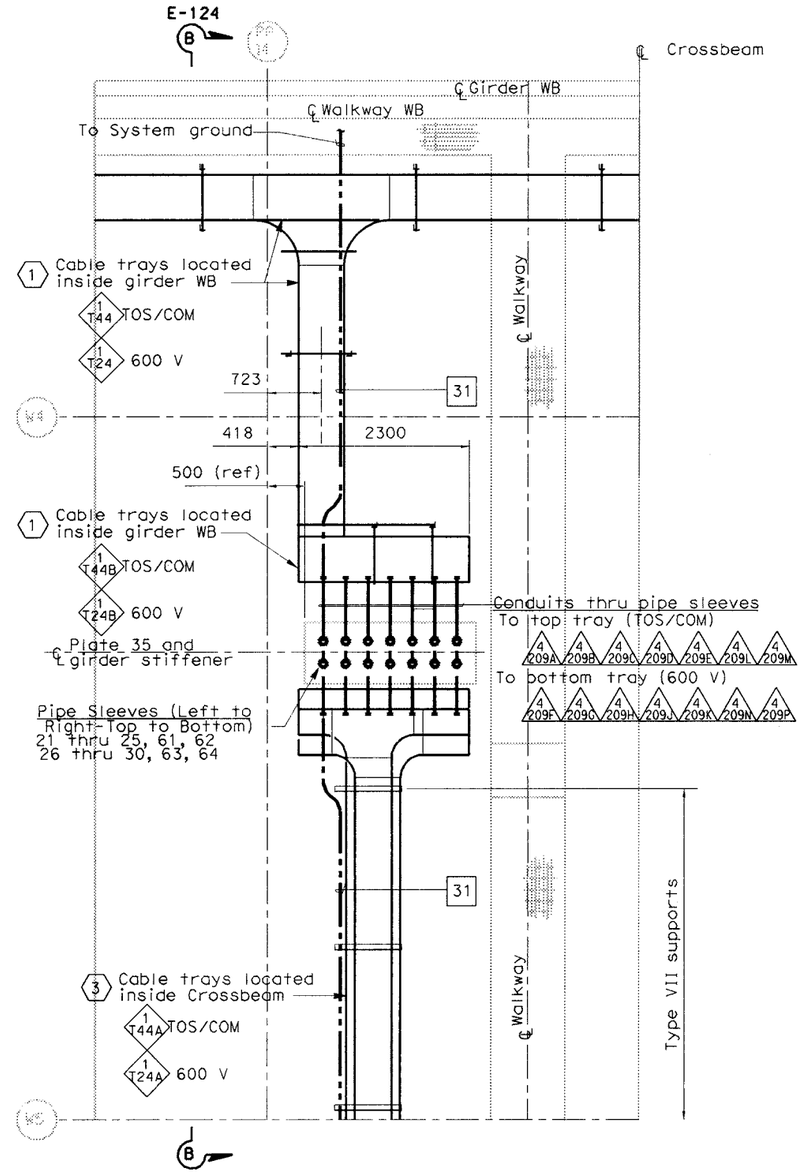

CABLE TRAY PLAN - DETAIL 4

SCALE 1:40

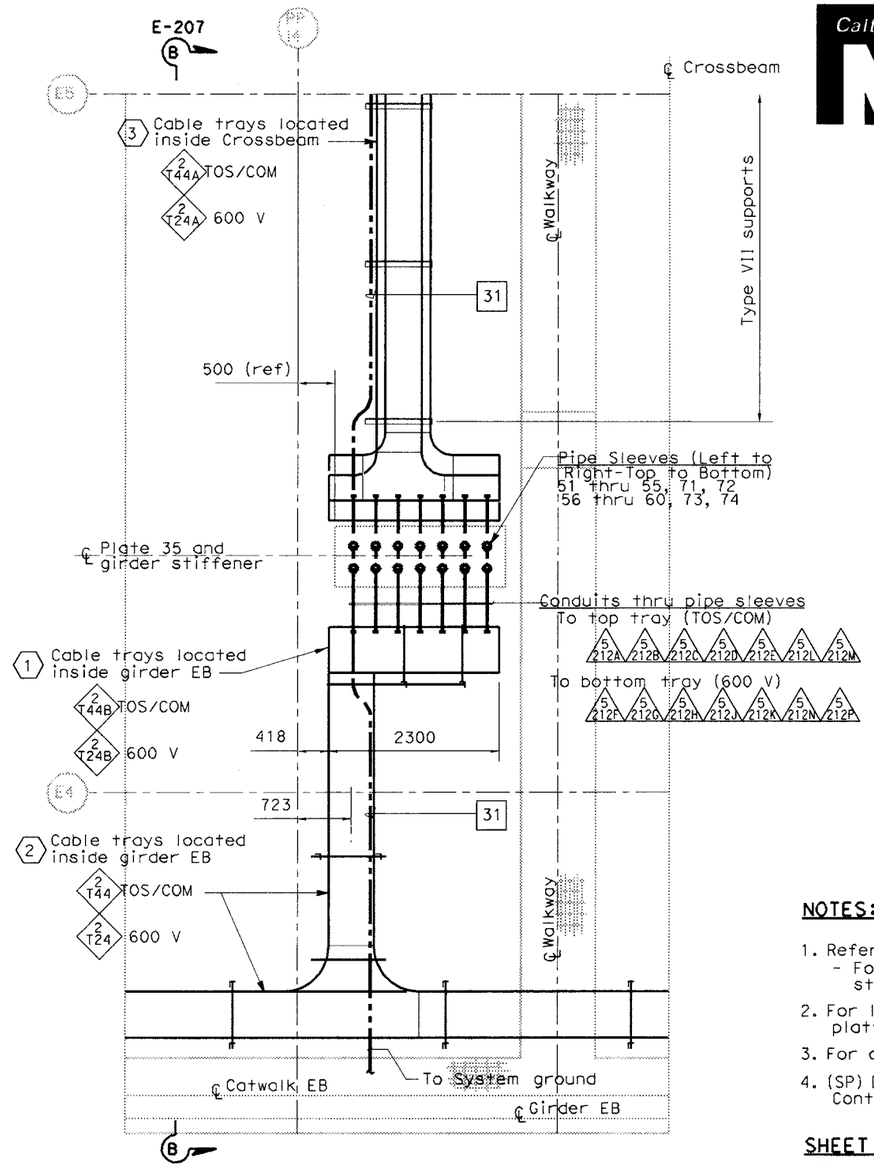

CABLE TRAY PLAN - DETAIL 5

SCALE 1:40

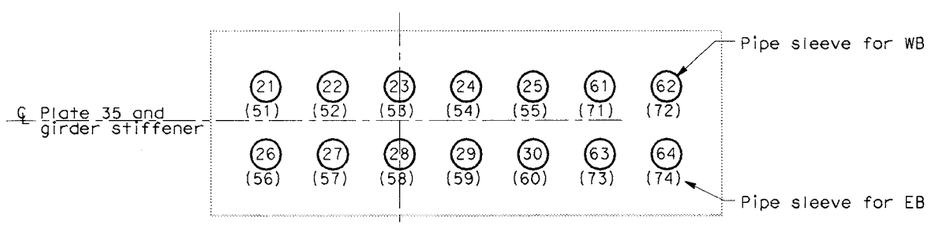

PIPE SLEEVE LOCATION

NO SCALE

THIS PLAN IS ACCURATE FOR ELECTRICAL WORK ONLY.

NOTES:

1. Reference:
   - For circuit, conduit/cable tray schedules, see sheets starting at E-401.
2. For location of pipe sleeves at the Crossbeam/Service platform, see Typical crossbeam details sheets.
3. For cable tray support details, see AS sheets.
4. (SP) Denotes spare pipe sleeve for 103 mm. Contractor to provide plug at each ends.

SHEET NOTES:

(1) For continuation inside WB girder, -at Crossbeam #4, see sheet E-96.

(2) For continuation inside EB girder, -at Crossbeam #4, see sheet E-181.

(3) For continuation inside Crossbeam,

RFI#	
RFI#451	R00
RFI#811	R00
RFI#919	R00
RFI#919	R01

DETAILS
SAS SUPERSTRUCTURE GIRDER WESTBOUND CONDUIT, GROUNDING AND CABLE TRAY PLAN

SCALE AS NOTED

E-114A

DIST	COUNTY	ROUTE	KILOMETER POST TOTAL PROJECT	SHEET No	TOTAL SHEETS
04	SF	80	13.2/13.9	166 S1C	1204

Caltrans Metric

REGISTERED ELECTRICAL ENGINEER DATE

PLANS APPROVAL DATE

REGISTERED PROFESSIONAL ENGINEER No. Exp. STATE OF CALIFORNIA

PB POWER, Inc.
A Parsons Brinckerhoff Company
303 Second St., Suite 700N
San Francisco, CA 94107-1317

The State of California or its officers or agents shall not be responsible for the accuracy or completeness of electronic copies of this plan sheet.

Caltrans now has a web site! To get to the web site, go to http://www.dot.ca.gov

DATE	REVISED BY	DATE REVISED
7/01	JP	12/01 BL

CALCULATED/DESIGNED BY — CHECKED BY

DESIGN OVERSIGHT: BEHZAD GOLEMOHAMMADI

STATE OF CALIFORNIA - DEPARTMENT OF TRANSPORTATION — Caltrans

LAST REVISION 00-00-00 — DATE PLOTTED => 1/23/2008 TIME PLOTTED => 11:09:52 AM

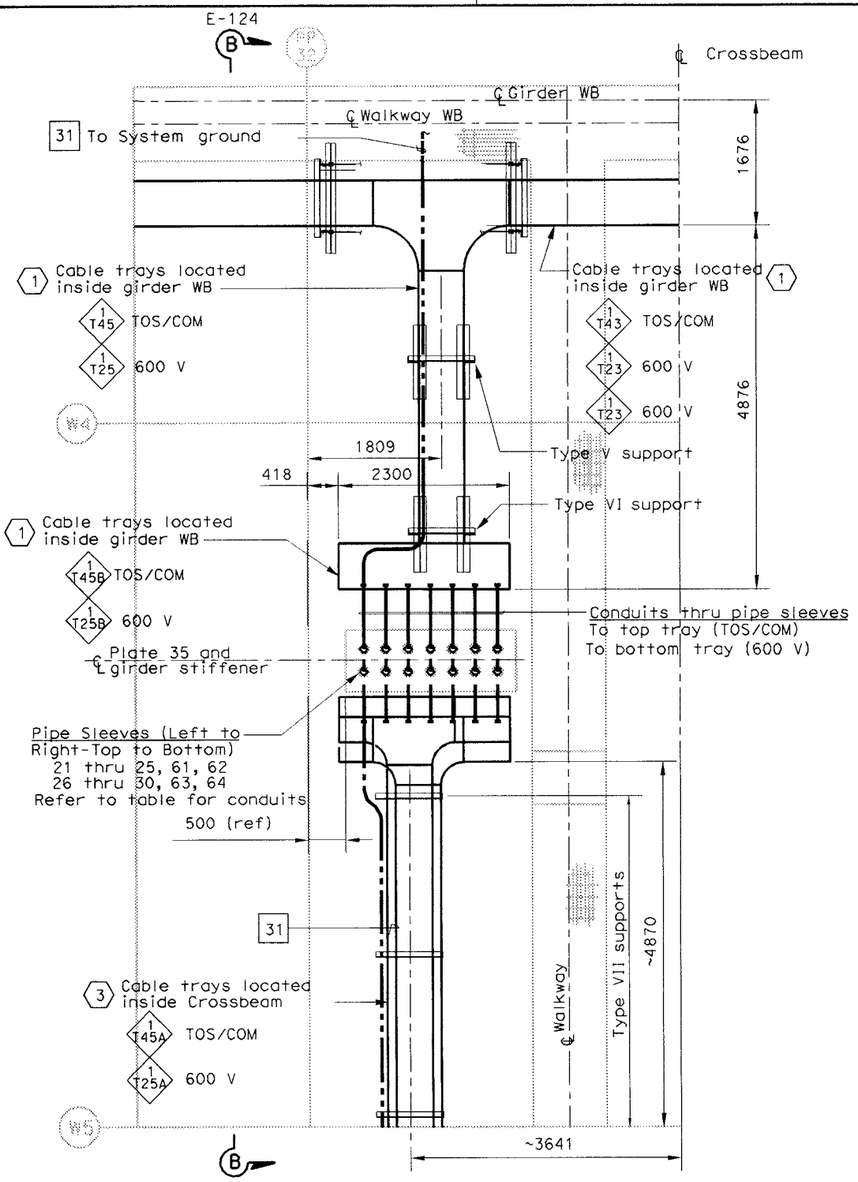

CABLE TRAY PLAN - DETAIL 4

(TYPICAL FOR PP 32, PP 50, PP 80 AND PP 110)
SCALE 1:40

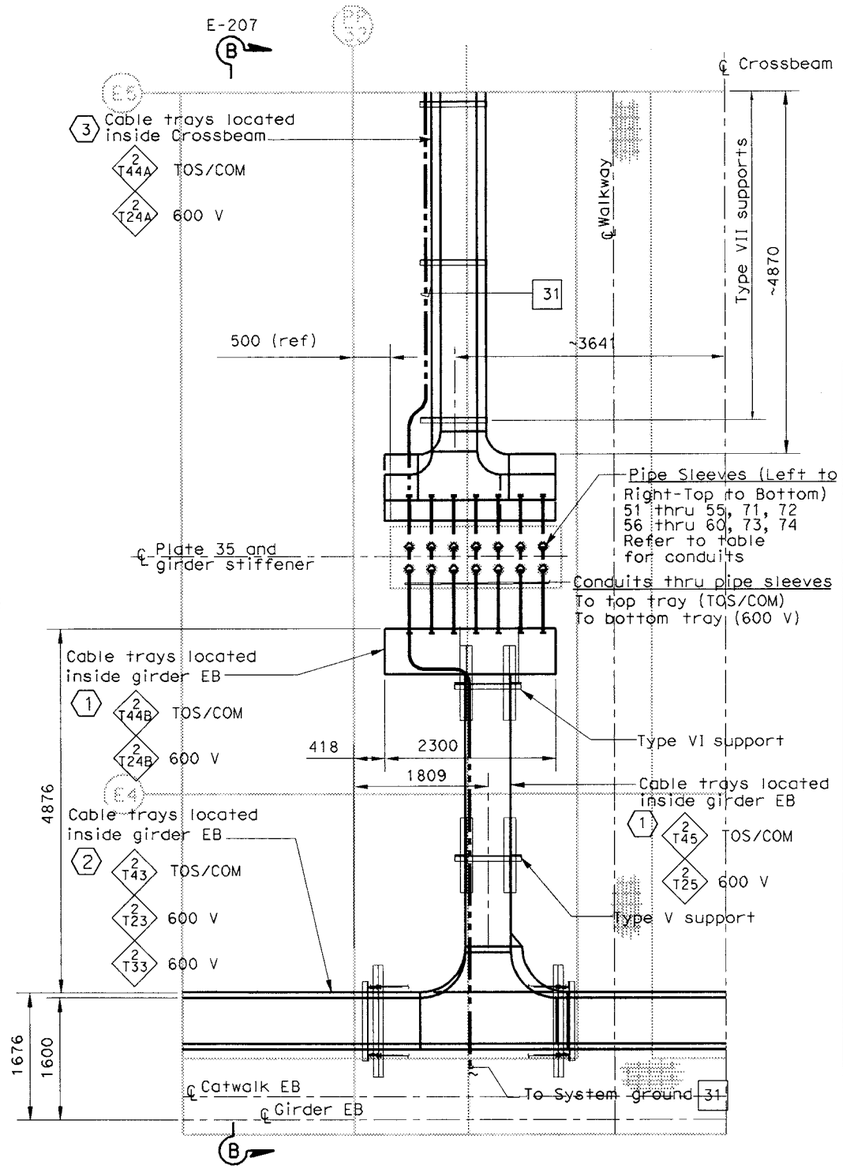

CABLE TRAY PLAN - DETAIL 5

(TYPICAL FOR PP 32, PP 50, PP 80 AND PP 110)
SCALE 1:40

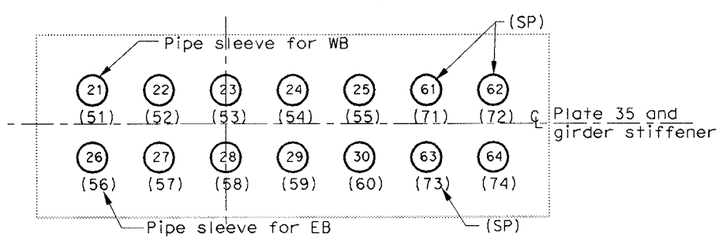

PIPE SLEEVE LOCATION

NO SCALE

THIS PLAN IS ACCURATE FOR ELECTRICAL WORK ONLY.

NOTES:

1. Reference:
   - For circuit, conduit/cable tray schedules, see sheets starting at E-401.
2. For location of pipe sleeves at the Crossbeam/Service platform, see Typical crossbeam details sheets.
3. For cable tray support details, see AS sheets.
4. (SP) Denotes spare pipe sleeve for 103 mm. Contractor to provide plug at each ends.

SHEET NOTES:

1. For continuation inside WB girder, -at Crossbeam #4, see sheet E-96.
2. For continuation inside EB girder, -at Crossbeam #4, see sheet E-181.
3. For continuation inside Crossbeam,

RFI#451	R00
RFI#811	R00
RFI#919	R00
RFI#919	R01

			CONDUIT NUMBER/PIPE SLEEVE	TRAY NO. (TO)
WESTBOUND	CROSSBEAM AT PP-32	TOP	5 211A 21, 5 211B 22, 5 211C 23, 5 211D 24, 5 211E 25, 5 211L 61, 5 211M 62	1 T45A, 1 T25A
		BOTTOM	5 211A 26, 5 211G 27, 5 211H 28, 5 211J 29, 5 211K 30, 5 211N 63, 5 211P 64	1 T45, 1 T25
	CROSSBEAM AT PP-50	TOP	5 213A 21, 5 213B 22, 5 213C 23, 5 213D 24, 5 213E 26, 5 213L 61, 5 213M 62	1 T46A, 1 T26A
		BOTTOM	5 213A 26, 5 213G 27, 5 213H 28, 5 213J 29, 5 213K 30, 5 213N 63, 5 213P 64	1 T46, 1 T26
	CROSSBEAM AT PP-80	TOP	5 215A 21, 5 215B 22, 5 215C 23, 5 215D 24, 5 215E 27, 5 215L 61, 5 215M 62	1 T47A, 1 T27A
		BOTTOM	5 215A 27, 5 215G 27, 5 215H 28, 5 215J 29, 5 215K 30, 5 215N 63, 5 215P 64	1 T47, 1 T27
	CROSSBEAM AT PP-110	TOP	5 217A 21, 5 217B 22, 5 217C 23, 5 217D 24, 5 217E 28, 5 217L 61, 5 217M 62	1 T48A, 1 T28A
		BOTTOM	5 217A 28, 5 217G 28, 5 217H 28, 5 217J 29, 5 217K 30, 5 217N 63, 5 217P 64	1 T48, 1 T28
EASTBOUND	CROSSBEAM AT PP-32	TOP	5 215A 51, 5 215B 52, 5 215C 53, 5 215D 54, 5 215E 55, 5 215L 71, 5 215M 72	2 T45A, 2 T25A
		BOTTOM	5 215A 56, 5 215G 57, 5 215H 58, 5 215J 59, 5 215K 60, 5 215N 73, 5 215P 74	2 T45, 2 T25
	CROSSBEAM AT PP-50	TOP	5 217A 51, 5 217B 52, 5 217C 53, 5 217D 54, 5 217E 55, 5 217L 71, 5 217M 72	2 T46A, 2 T26A
		BOTTOM	5 217A 56, 5 217G 57, 5 217H 58, 5 217J 59, 5 217K 60, 5 217N 73, 5 217P 74	2 T46, 2 T26
	CROSSBEAM AT PP-80	TOP	5 219A 51, 5 219B 52, 5 219C 53, 5 219D 54, 5 219E 55, 5 219L 71, 5 219M 72	2 T47A, 2 T27A
		BOTTOM	5 219A 56, 5 219G 57, 5 219H 58, 5 219J 59, 5 219K 60, 5 219N 73, 5 219P 74	2 T47, 2 T27
	CROSSBEAM AT PP-110	TOP	5 300A 51, 5 300B 52, 5 300C 53, 5 300D 54, 5 300E 55, 5 300L 71, 5 300M 72	2 T48A, 2 T28A
		BOTTOM	5 300A 56, 5 300G 57, 5 300H 58, 5 300J 59, 5 300K 60, 5 300N 73, 5 300P 74	2 T48, 2 T28

DETAILS
SAS SUPERSTRUCTURE GIRDER WESTBOUND CONDUIT, GROUNDING AND CABLE TRAY PLAN

SCALE AS NOTED

E-114B

ALL DIMENSIONS ARE IN MILLIMETERS UNLESS OTHERWISE SHOWN.

DIST	COUNTY	ROUTE	KILOMETER POST TOTAL PROJECT	SHEET No	TOTAL SHEETS
04	SF	80	13.2/13.9	166 S2C	1204

Caltrans Metric

REGISTERED ELECTRICAL ENGINEER DATE
PLANS APPROVAL DATE
REGISTERED PROFESSIONAL ENGINEER NO. EXP. STATE OF CALIFORNIA

PB POWER, Inc.
A Parsons Brinckerhoff Company
303 Second St., Suite 700N
San Francisco, CA 94107-1317

The State of California or its officers or agents shall not be responsible for the accuracy or completeness of electronic copies of this plan sheet.

Caltrans now has a web site! To get to the web site, go to http://www.dot.ca.gov

STATE OF CALIFORNIA - DEPARTMENT OF TRANSPORTATION
Caltrans

DESIGN OVERSIGHT: BEHZAD GOLEMOHAMMADI

CALCULATED/DESIGNED BY | CHECKED BY | DATE | REVISED BY | DATE REVISED

FOR REDUCED PLANS ORIGINAL 0 20 40 60 80

DGN FILE =>T:\13103\MS\pse\SAS Struc\RFI\SAS RFI 451 - Completed. see ccr 34 for revision\166S2.dgn
USERNAME =>reyesl
CU 04251 EA 0120F1

LAST REVISION 00-00-00 | DATE PLOTTED => 1/23/2008 | TIME PLOTTED => 1:39:57 PM

DIST	COUNTY	ROUTE	KILOMETER POST TOTAL PROJECT	SHEET No	TOTAL SHEETS
04	SF	80	13.2/13.9	167C	1204

REGISTERED ELECTRICAL ENGINEER DATE

PLANS APPROVAL DATE

REGISTERED PROFESSIONAL ENGINEER No. Exp. ELECTRICAL STATE OF CALIFORNIA

PB POWER, Inc.
A Parsons Brinckerhoff Company
303 Second St., Suite 700N
San Francisco, CA 94107-1317

The State of California or its officers or agents shall not be responsible for the accuracy or completeness of electronic copies of this plan sheet.

Caltrans now has a web site! To get to the web site, go to http://www.dot.ca.gov

Caltrans Metric

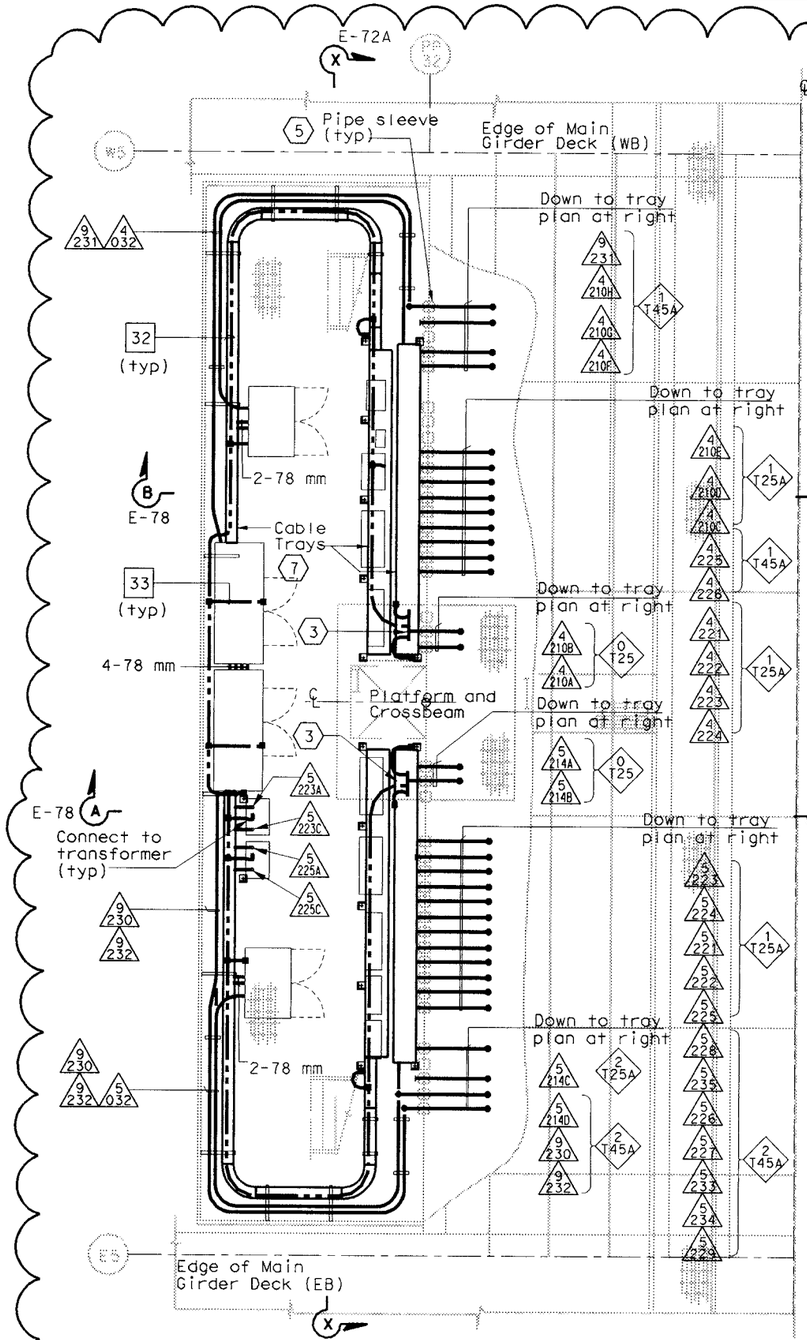

CABLE TRAY AND CONDUIT PLAN AT SERVICE PLATFORM

SCALE 1:40

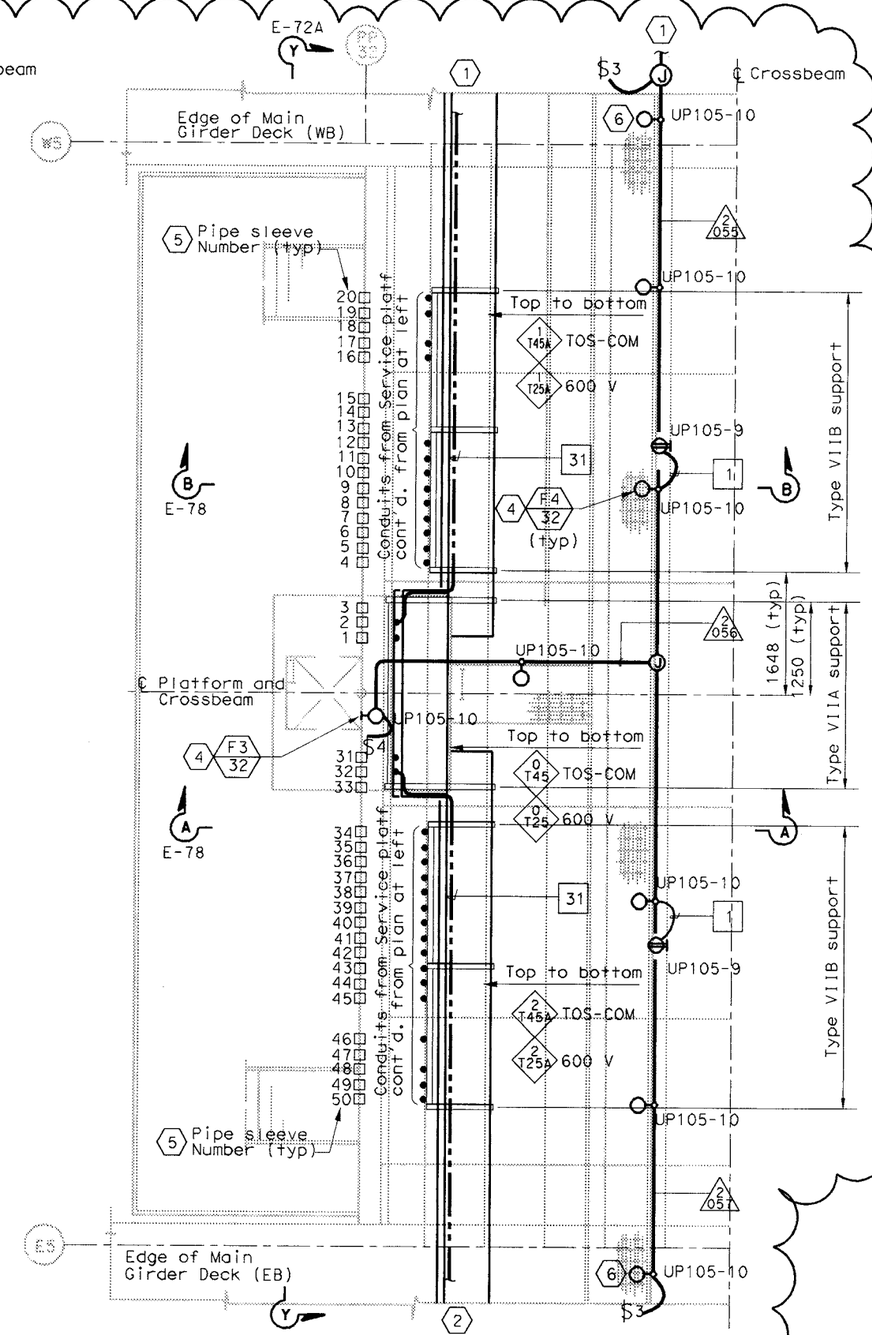

CABLE TRAY AND CONDUIT PLAN INSIDE CROSSBEAM

SCALE 1:40

SHEET NOTES:

1. For continuation inside WB girder, see sheets E-97 and E-114A.
2. For continuation inside EB girder, see sheet E-182 and E-114A.
3. For typical ground bar installation, see Detail 5 sheet E-78.
4. For typical lighting fixture installation see Details 2 and 3, sheet E-123.
5. Pipe sleeve without conduit going through is spare. Contractor to provide plug or cap at both ends. For location see sheet E-72A.
6. Locate light fixture approximate half way between girder wall and girder walkway.
7. For cable tray numbers, see sheet E-72.

NOTES:

1. Reference:
   - For circuit, conduit/cable tray schedules, see sheets starting at E-401.
2. For cable tray support details, AS sheets.
3. For location of pipe sleeves at the utility platform crossbeams, see Typical Crossbeam Details sheets.
4. For platform elevations, see sheet E-72A.

RFI# 451 R00

DETAILS
SAS SUPERSTRUCTURE GIRDER WESTBOUND PLATFORM 5 CONDUIT, LIGHTING, AND GROUNDING PLAN

SCALE AS NOTED

E-115

THIS PLAN IS ACCURATE FOR ELECTRICAL WORK ONLY.

ALL DIMENSIONS ARE IN MILLIMETERS UNLESS OTHERWISE SHOWN.

FOR REDUCED PLANS ORIGINAL 0 20 40 60 80

DGN FILE =>t:\13103\ms\pse\sas struc\rfi\sas rfi 451 - completed. see ccr 34 for revision\167.dgn

DATE	REVISED BY	DATE REVISED
7/01	JP	12/01 BL

CALCULATED/DESIGNED BY
CHECKED BY

DESIGN OVERSIGHT
BEHZAD GOLEMOHAMMADI

STATE OF CALIFORNIA - DEPARTMENT OF TRANSPORTATION
Caltrans

LAST REVISION 00-00-00
DATE PLOTTED => 1/23/2008
TIME PLOTTED => 11:09:53 AM

DIST	COUNTY	ROUTE	KILOMETER POST TOTAL PROJECT	SHEET No	TOTAL SHEETS
04	SF	80	13.2/13.9	168C	1204

REGISTERED ELECTRICAL ENGINEER DATE

PLANS APPROVAL DATE

REGISTERED PROFESSIONAL ENGINEER No. Exp. ELECTRICAL STATE OF CALIFORNIA

PB POWER, Inc.
A Parsons Brinckerhoff Company
303 Second St., Suite 700N
San Francisco, CA 94107-1317

The State of California or its officers or agents shall not be responsible for the accuracy or completeness of electronic copies of this plan sheet.

Caltrans now has a web site! To get to the web site, go to http://www.dot.ca.gov

Caltrans Metric

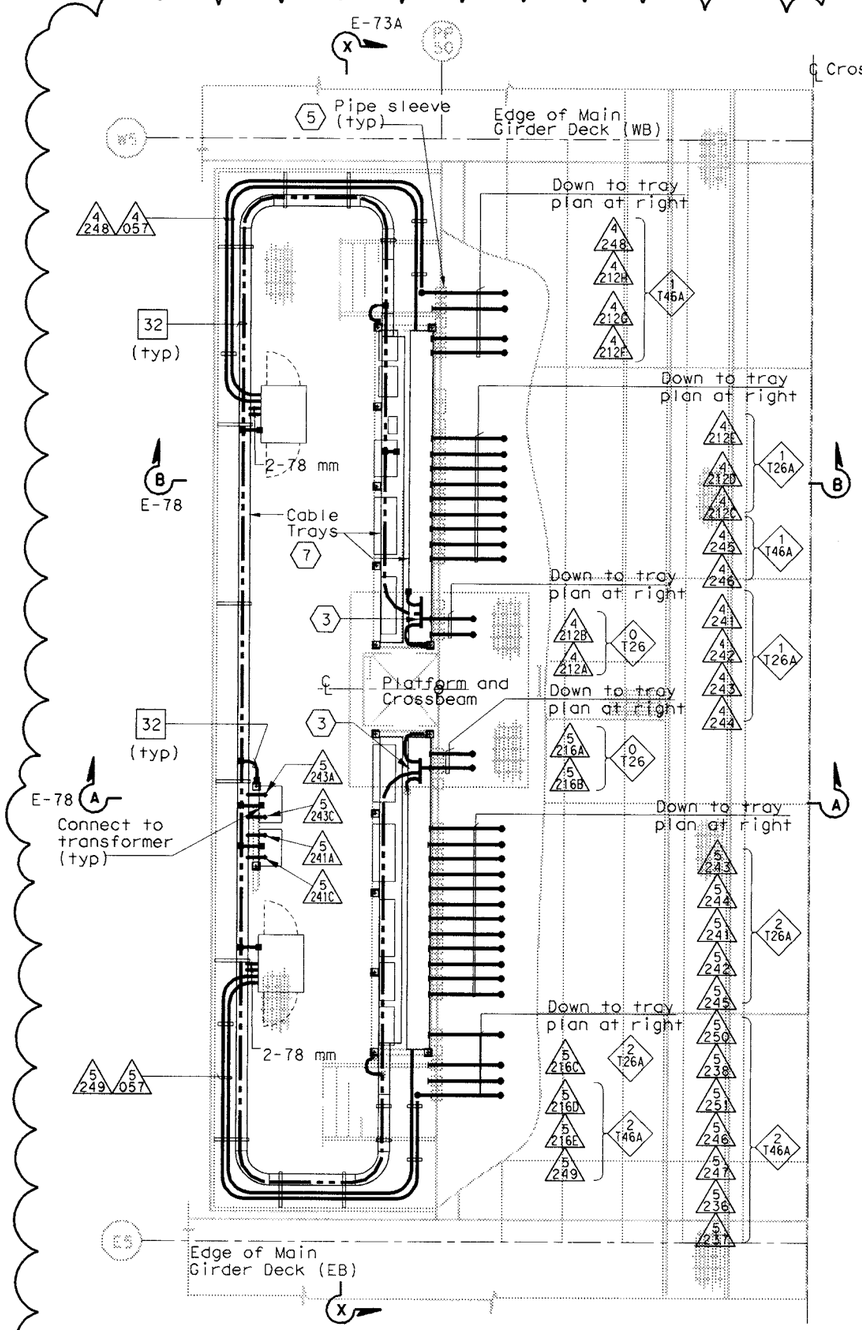

CABLE TRAY AND CONDUIT PLAN AT SERVICE PLATFORM

SCALE 1:40

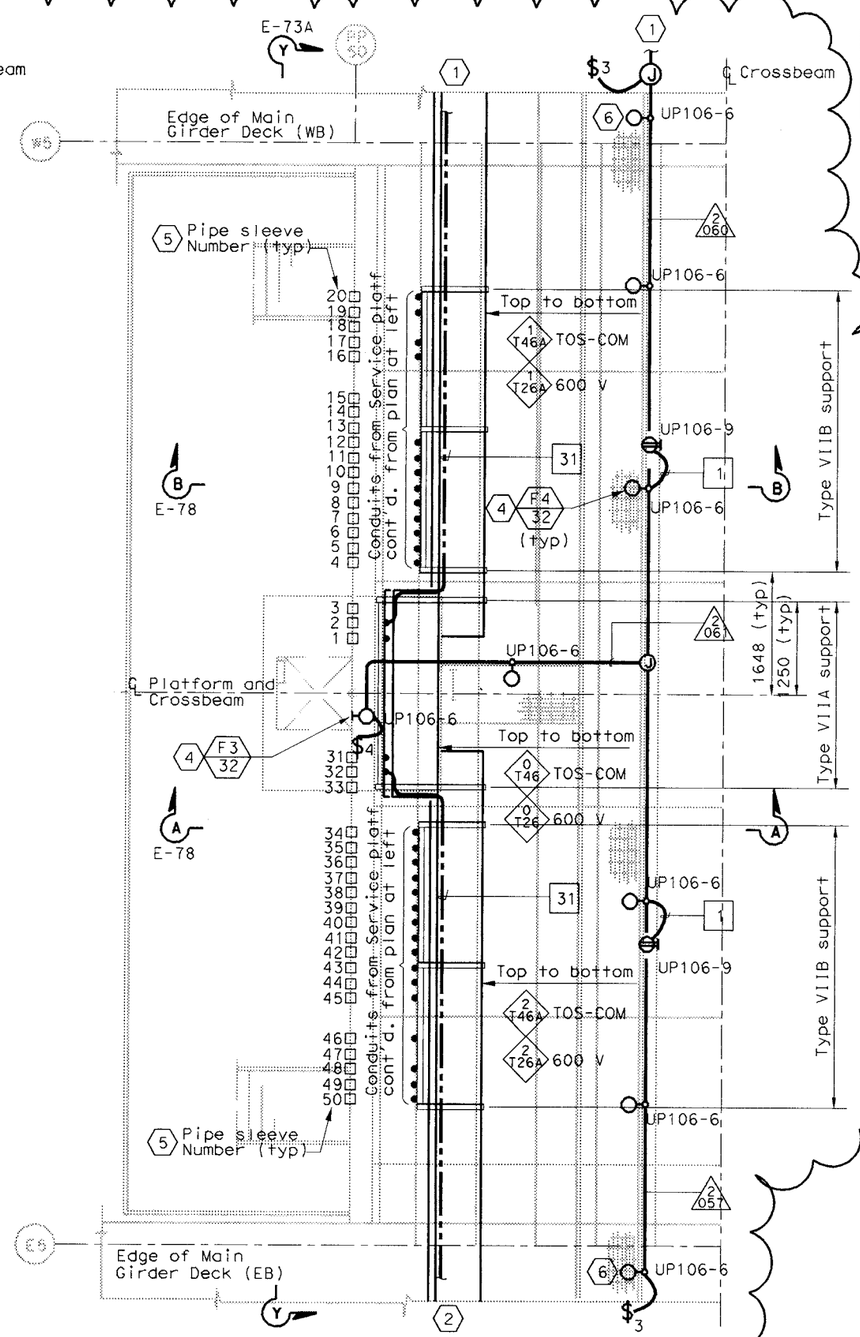

CABLE TRAY AND CONDUIT PLAN INSIDE CROSSBEAM

SCALE 1:40

SHEET NOTES:

1. For continuation inside WB girder, see sheets E-98 and E-114A.
2. For continuation inside EB girder, see sheet E-183 and E-114A
3. For typical ground bar installation, see Detail 5 sheet E-78.
4. For typical lighting fixture installation see Details 2 and 3, sheet E-123.
5. Pipe sleeve without conduit going through is spare. Contractor to provide plug or cap at both ends. For location see sheet E-73A.
6. Locate light fixture approximate half way between girder wall and girder walkway.
7. For cable tray numbers, see sheet E-73.

NOTES:

1. Reference:
   - For circuit, conduit/cable tray schedules, see sheets starting at E-401.
2. For cable tray support details, AS sheets.
3. For location of pipe sleeves at the utility platform crossbeams, see Typical Crossbeam Details sheets.
4. For platform elevations, see sheet E-73A.

RFI# 451 R00

DETAILS
SAS SUPERSTRUCTURE GIRDER WESTBOUND PLATFORM 6 CONDUIT, LIGHTING, AND GROUNDING PLAN

SCALE AS NOTED

E-116

CALCULATED/ DESIGNED BY	JP	DATE 08/01	REVISED BY
CHECKED BY	BL	11/01	DATE REVISED

DESIGN OVERSIGHT
BEHZAD GOLEMOHAMMADI

STATE OF CALIFORNIA - DEPARTMENT OF TRANSPORTATION
Caltrans

THIS PLAN IS ACCURATE FOR ELECTRICAL WORK ONLY.

ALL DIMENSIONS ARE IN MILLIMETERS UNLESS OTHERWISE SHOWN.

FOR REDUCED PLANS ORIGINAL 0 20 40 60 80

DGN FILE =>t:\13103\ms\pse\sas struc\rfi\sas rfi 451 - completed. see ccr 34 for revision\168.dgn

LAST REVISION 00-00-00 | DATE PLOTTED => 1/23/2008 TIME PLOTTED => 11:09:54 AM

DIST	COUNTY	ROUTE	KILOMETER POST TOTAL PROJECT	SHEET No	TOTAL SHEETS
04	SF	80	13.2/13.9	169C	1204

REGISTERED ELECTRICAL ENGINEER DATE

PLANS APPROVAL DATE

REGISTERED PROFESSIONAL ENGINEER No. Exp. ELECTRICAL STATE OF CALIFORNIA

PB POWER, Inc.
A Parsons Brinckerhoff Company
303 Second St., Suite 700N
San Francisco, CA 94107-1317

The State of California or its officers or agents shall not be responsible for the accuracy or completeness of electronic copies of this plan sheet.

Caltrans now has a web site! To get to the web site, go to http://www.dot.ca.gov

Caltrans Metric

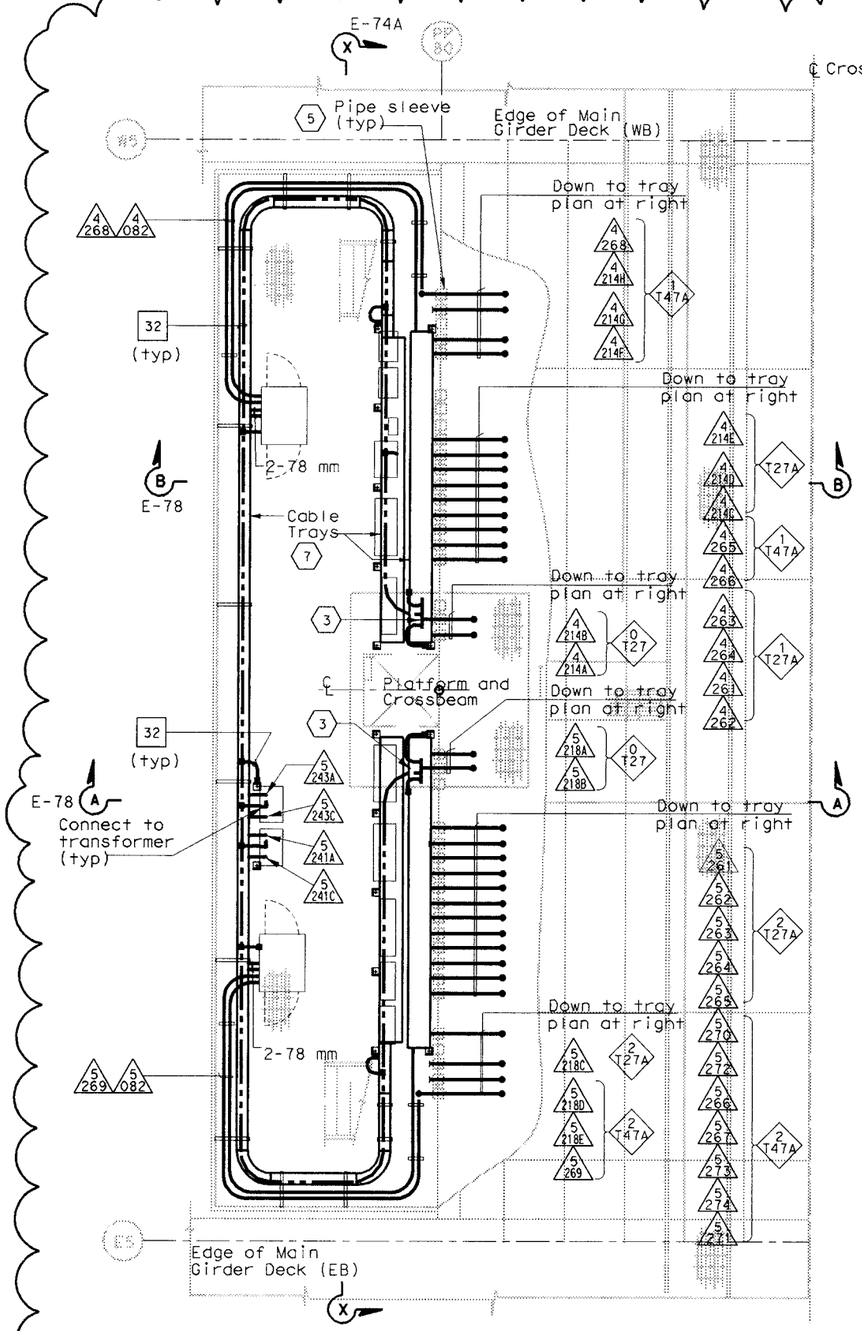

CABLE TRAY AND CONDUIT PLAN AT SERVICE PLATFORM

SCALE 1:40

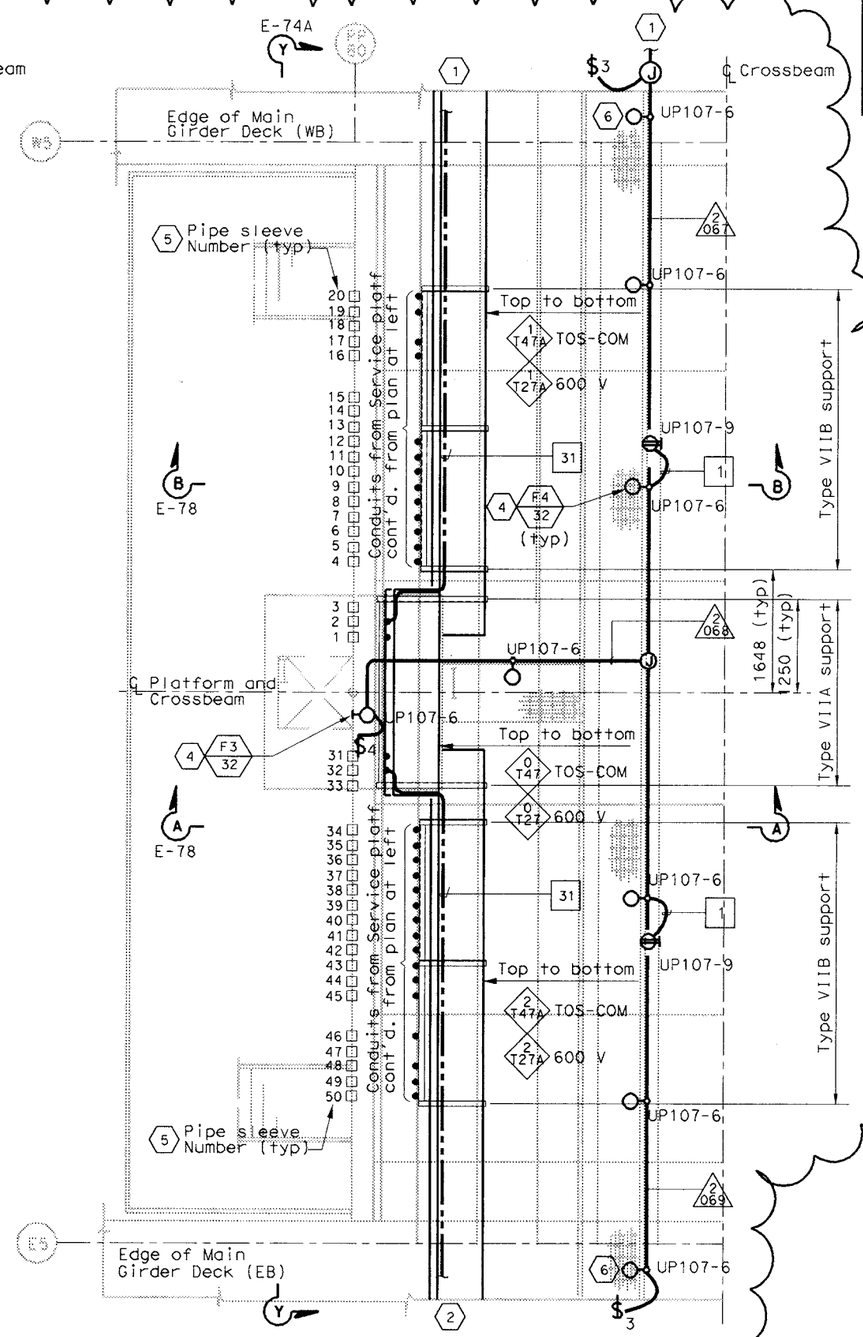

CABLE TRAY AND CONDUIT PLAN INSIDE CROSSBEAM

SCALE 1:40

Caltrans now has a web site! To get to the web site, go to http://www.dot.ca.gov

SHEET NOTES:

1. For continuation inside WB girder, see sheets E-98 and E-114A.
2. For continuation inside EB girder, see sheet E-183 and E-114A
3. For typical ground bar installation, see Detail 5 sheet E-78.
4. For typical lighting fixture installation see Details 2 and 3, sheet E-123.
5. Pipe sleeve without conduit going through is spare. Contractor to provide plug or cap at both ends. For location see sheet E-74A.
6. Locate light fixture approximate half way between girder wall and girder walkway.
7. For cable tray numbers, see sheet E-74.

NOTES:

1. Reference:
   - For circuit, conduit/cable tray schedules, see sheets starting at E-401.
2. For cable tray support details, AS sheets.
3. For location of pipe sleeves at the utility platform crossbeams, see Typical Crossbeam Details sheets.
4. For platform elevations, see sheet E-74A.

RFI# 451 R00

DETAILS
SAS SUPERSTRUCTURE GIRDER WESTBOUND PLATFORM 7 CONDUIT, LIGHTING, AND GROUNDING PLAN

SCALE AS NOTED

E-117

CALCULATED/ DESIGNED BY	JP	DATE 08/01	REVISED BY
CHECKED BY	BL	11/01	DATE REVISED

DESIGN OVERSIGHT: BEHZAD GOLEMOHAMMADI

STATE OF CALIFORNIA - DEPARTMENT OF TRANSPORTATION

Caltrans

THIS PLAN IS ACCURATE FOR ELECTRICAL WORK ONLY.

ALL DIMENSIONS ARE IN MILLIMETERS UNLESS OTHERWISE SHOWN.

FOR REDUCED PLANS ORIGINAL 0 20 40 60 80

DGN FILE =>t:\13103\ms\pse\sas struc\rfi\sas rfi 451 - completed. see ccr 34 for revision\169.dgn

LAST REVISION 00-00-00

DATE PLOTTED => 1/23/2008
TIME PLOTTED => 11:09:55 AM

DIST	COUNTY	ROUTE	KILOMETER POST TOTAL PROJECT	SHEET No	TOTAL SHEETS
04	SF	80	13.2/13.9	170C	1204

REGISTERED ELECTRICAL ENGINEER DATE

PLANS APPROVAL DATE

REGISTERED PROFESSIONAL ENGINEER No. Exp. ELECTRICAL STATE OF CALIFORNIA

PB POWER, Inc.
A Parsons Brinckerhoff Company
303 Second St., Suite 700N
San Francisco, CA 94107-1317

The State of California or its officers or agents shall not be responsible for the accuracy or completeness of electronic copies of this plan sheet.

Caltrans now has a web site! To get to the web site, go to http://www.dot.ca.gov

Caltrans Metric

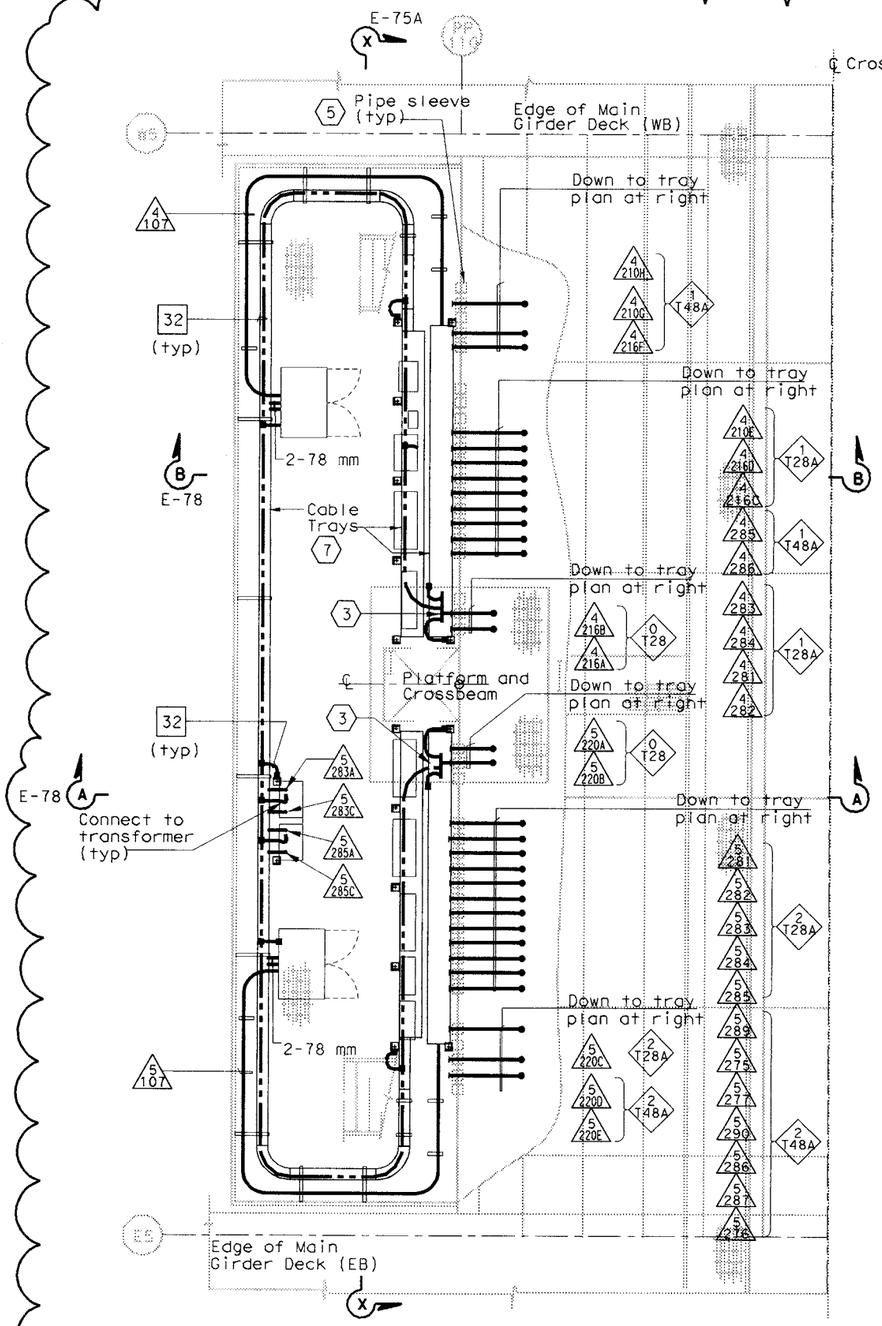

CABLE TRAY AND CONDUIT PLAN AT SERVICE PLATFORM

SCALE 1:40

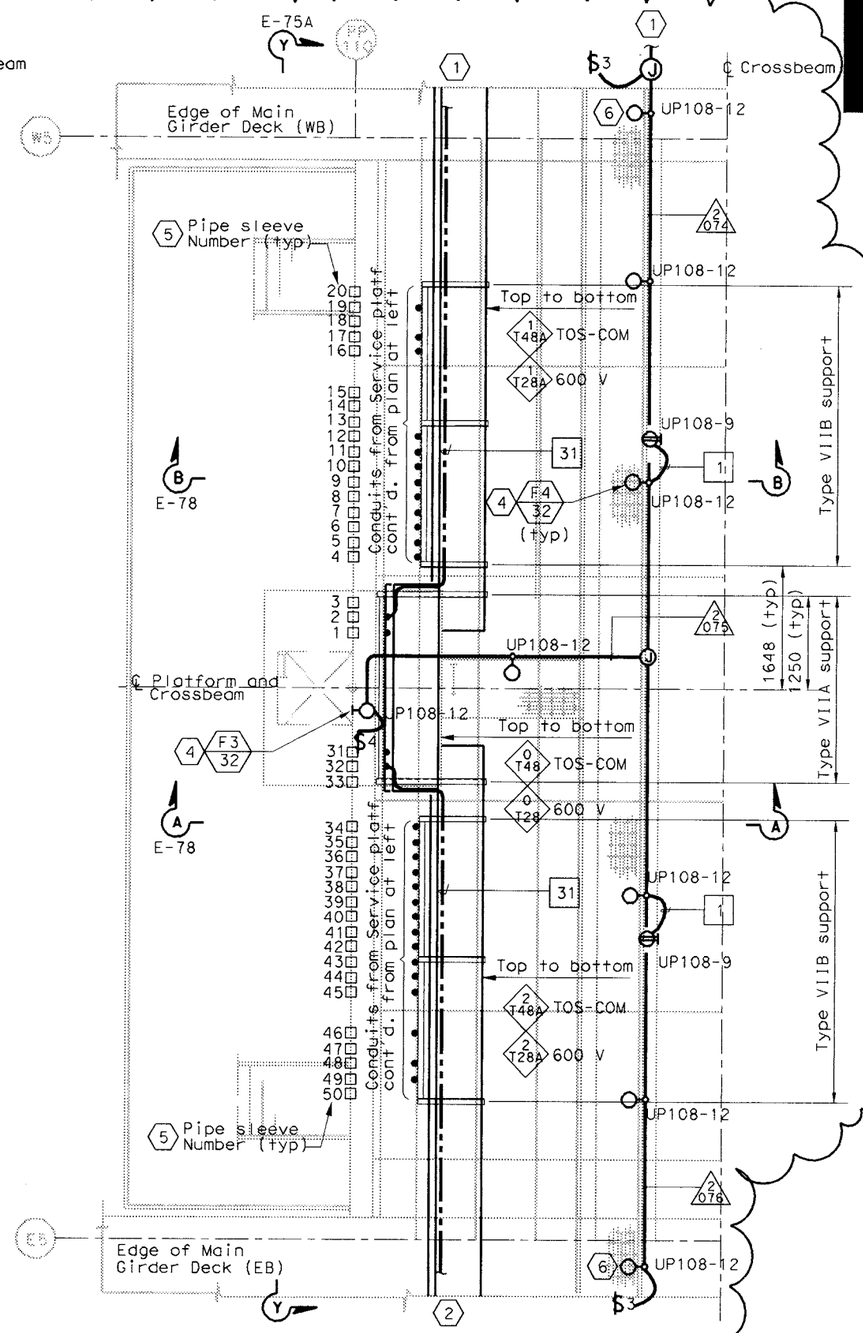

CABLE TRAY AND CONDUIT PLAN INSIDE CROSSBEAM

SCALE 1:40

SHEET NOTES:

1. For continuation inside WB girder, see sheets E-100 and E-114A.
2. For continuation inside EB girder, see sheet E-185 and E-114A
3. For typical ground bar installation, see Detail 5 sheet E-78.
4. For typical lighting fixture installation see Details 2 and 3, sheet E-123.
5. Pipe sleeve without conduit going through is spare. Contractor to provide plug or cap at both ends. For location see sheet E-75A.
6. Locate light fixture approximate half way between girder wall and girder walkway.
7. For cable tray numbers, see sheet E-75.

NOTES:

1. Reference:
   - For circuit, conduit/cable tray schedules, see sheets starting at E-401.
2. For cable tray support details, AS sheets.
3. For location of pipe sleeves at the utility platform crossbeams, see Typical Crossbeam Details sheets.
4. For platform elevations, see sheet E-75A.

RFI# 451 R00

DETAILS
SAS SUPERSTRUCTURE GIRDER WESTBOUND PLATFORM 8 CONDUIT, LIGHTING, AND GROUNDING PLAN

SCALE AS NOTED

E-118

STATE OF CALIFORNIA - DEPARTMENT OF TRANSPORTATION

Caltrans

DESIGN OVERSIGHT: BEHZAD GOLEMOHAMMADI

CALCULATED/DESIGNED BY: JP | DATE 7/01 | REVISED BY
CHECKED BY: BL | 12/01 | DATE REVISED

THIS PLAN IS ACCURATE FOR ELECTRICAL WORK ONLY.

ALL DIMENSIONS ARE IN MILLIMETERS UNLESS OTHERWISE SHOWN.

FOR REDUCED PLANS ORIGINAL 0 20 40 60 80

DGN FILE =>t:\13103\ms\pse\sas struc\rfi\sas rfi 451 - completed. see ccr 34 for revision\170.dgn

LAST REVISION 00-00-00

DATE PLOTTED => 1/23/2008
TIME PLOTTED => 11:09:55 AM

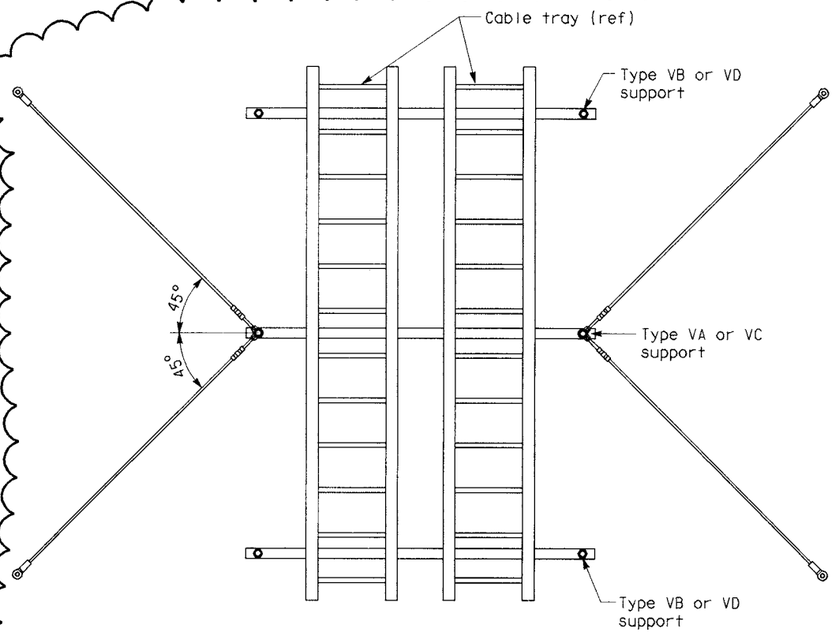

PLAN VIEW - CABLE TRAY SUPPORTS

MATERIAL LIST

Item No.	Description	Type VA thru VE
A	Deleted	
B	Deleted	
C	Threaded steel hanger rod, 13 mm diameter	-
D	Strut channel spring nut, lock washer and hex bolt	X
E	Cable tray clamp with hardware	X
F	Strut hanger trapeze hardware kit	X
G	Deleted	
H	Deleted	
J	Rod hanger expansion anchor, 13 mm dia, 100 mm minimum depth embedment and allowable load (in tension) of 4.45 kN	X
K	Deleted	
L	Deleted	
M	Seismic bracing kit (includes 4-stake eyes, 4-oval sleeves, 4-URC clips and 4-3048mm long wire cables)	X
N	Strut channel, 41 mm x 82 mm	X
P	Expansion/sleeve anchors 13 mm dia x 76 mm long hex type, embed 100 mm minimum	X
Q	Flat washer 13 mm dia bolt size	X
R	Deleted	
S	Threaded rod (13 mm) with stiffener & stiffener clips	X
T	Hex nut and washer for expansion anchor	X
U	Deleted	
V	Deleted	
W	Deleted	

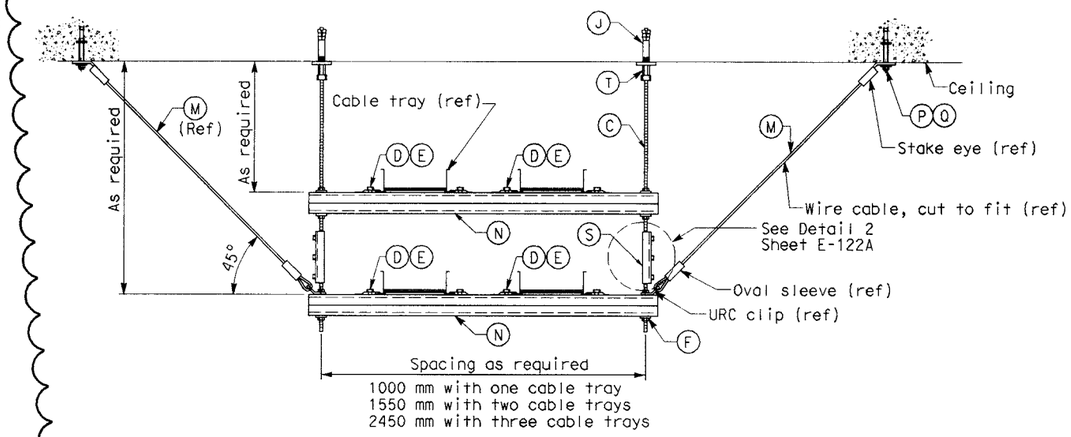

TYPE VC CABLE TRAY SUPPORT ELEVATION

TYPE VD CABLE TRAY SUPPORT ELEVATION WITHOUT (ITEM M) SEISMIC BRACING KIT

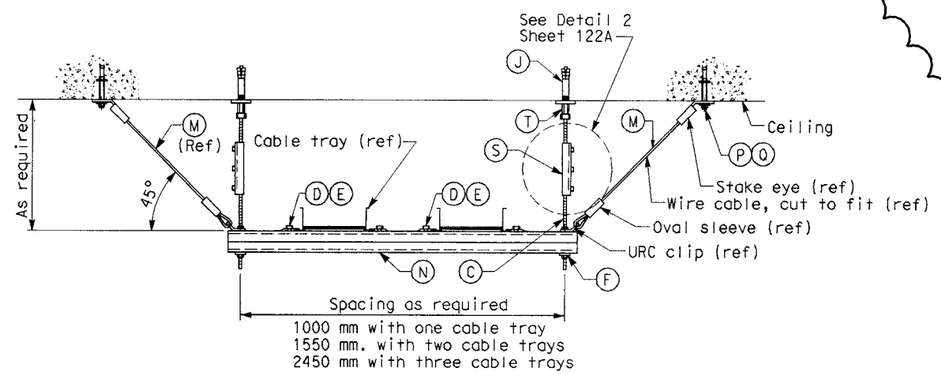

TYPE VA CABLE TRAY SUPPORT ELEVATION

TYPE VB CABLE TRAY SUPPORT ELEVATION WITHOUT (ITEM M) SEISMIC BRACING KIT

CCR# 051

DETAILS
SAS SUPERSTRUCTURE GIRDER WESTBOUND
TYPICAL TRAY SUPPORTS
NO SCALE

E-122

DIST	COUNTY	ROUTE	KILOMETER POST TOTAL PROJECT	SHEET No	TOTAL SHEETS
04	SF	80	13.2/13.9	174C	1204

REGISTERED ELECTRICAL ENGINEER DATE

PLANS APPROVAL DATE

REGISTERED PROFESSIONAL ENGINEER No. Exp. ELECTRICAL STATE OF CALIFORNIA

PB POWER, Inc.
A Parsons Brinckerhoff Company
303 Second St., Suite 700N
San Francisco, CA 94107-1317

The State of California or its officers or agents shall not be responsible for the accuracy or completeness of electronic copies of this plan sheet.

Caltrans now has a web site! To get to the web site, go to http://www.dot.ca.gov

Caltrans Metric

CALCULATED/ DESIGNED BY	DATE	REVISED BY	DATE REVISED
RG	07/07		
CHECKED BY			
ES	07/07		

DESIGN OVERSIGHT
BEHZAD GOLEMOHAMMADI

STATE OF CALIFORNIA - DEPARTMENT OF TRANSPORTATION
Caltrans

THIS PLAN ACCURATE FOR ELECTRICAL WORK ONLY.

ALL DIMENSIONS ARE IN MILLIMETERS UNLESS OTHERWISE SHOWN

FOR REDUCED PLANS ORIGINAL SCALE IS IN MILLIMETERS 0 20 40 60 80

DGN FILE =>t:\13103\ms\pse\sas struc\ccr\sas ccr 51\174.dgn
USERNAME =>reyesl

LAST REVISION 00-00-00
DATE PLOTTED => 1/23/2008
TIME PLOTTED => 11:09:56 AM

DIST	COUNTY	ROUTE	KILOMETER POST TOTAL PROJECT	SHEET No	TOTAL SHEETS
04	SF	80	13.2/13.9	174 S1C	1204

REGISTERED ELECTRICAL ENGINEER DATE

PLANS APPROVAL DATE

REGISTERED PROFESSIONAL ENGINEER No. Exp. ELECTRICAL STATE OF CALIFORNIA

PB POWER, Inc.
A Parsons Brinckerhoff Company
303 Second St., Suite 700N
San Francisco, CA 94107-1317

The State of California or its officers or agents shall not be responsible for the accuracy or completeness of electronic copies of this plan sheet.

Caltrans now has a web site! To get to the web site, go to http://www.dot.ca.gov

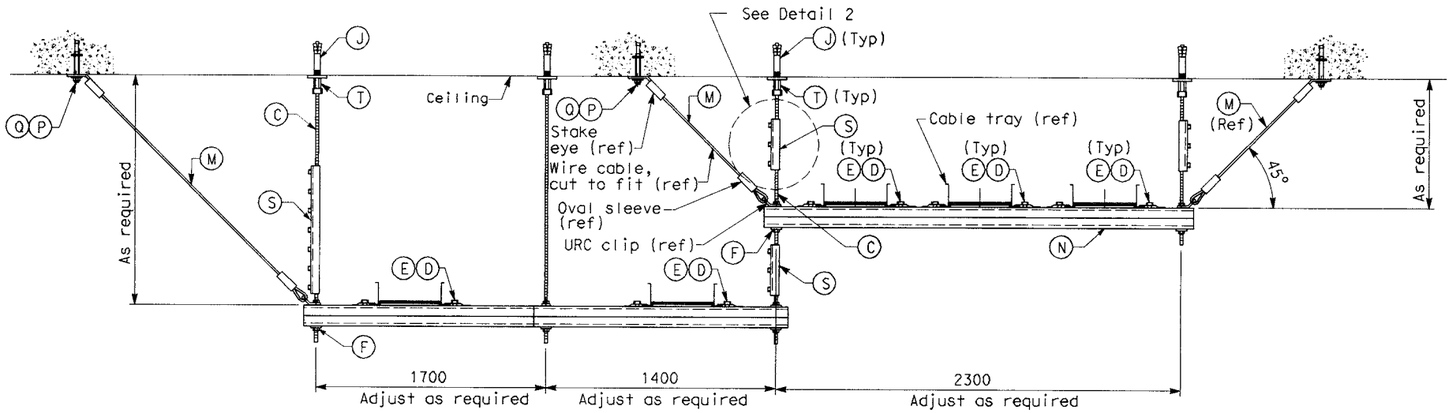

TYPE VE CABLE TRAY SUPPORT ELEVATION

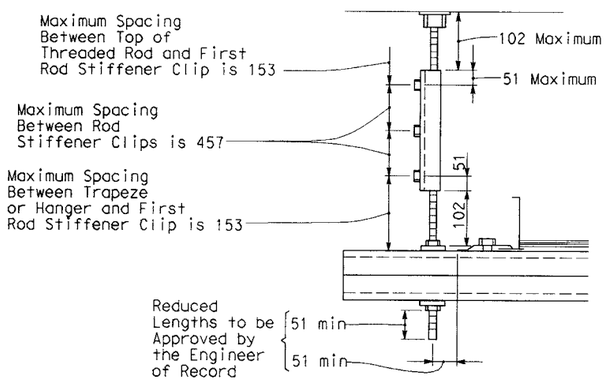

DETAIL 2

MATERIAL LIST

Item No.	Description	Type VA thru VE
A	Not Used	
B	Not Used	
C	Threaded steel hanger rod, 13 mm diameter	-
D	Strut channel spring nut, lock washer and hex bolt	X
E	Cable tray clamp with hardware	X
F	Strut hanger trapeze hardware kit	X
G	Not Used	
H	Not Used	
J	Rod hanger expansion anchor, 13 mm dia, 100 mm minimum depth embedment and allowable load (in tension) of 4.45 kN	X
K	Not Used	
L	Not Used	
M	Seismic bracing kit (includes 4-stake eyes, 4-oval sleeves, 4-URC clips and 4-3048mm long wire cables) PW Industries part no. PW18-C26-10/C-SP-316SS or equal	X
N	Strut channel, 41 mm x 82 mm	X
P	Expansion/sleeve anchors 13 mm dia. hex type, embed 100 mm minimum	X
Q	Flat washer 13 mm dia bolt size	X
R	Not Used	
S	Threaded rod (13 mm) with stiffener & stiffener clips	X
T	Rod coupler, hex nut and washer for expansion anchor	X
U	Not Used	
V	Not Used	
W	Not Used	

CCR# 051

DETAILS
SAS SUPERSTRUCTURE GIRDER WESTBOUND TYPICAL TRAY SUPPORTS
NO SCALE

E-122A

DATE	REVISED BY	DATE	REVISED BY
07/07	RG	07/07	ES

CALCULATED/DESIGNED BY — CHECKED BY

DESIGN OVERSIGHT — BEHZAD GOLEMOHAMMADI

STATE OF CALIFORNIA - DEPARTMENT OF TRANSPORTATION

Caltrans

THIS PLAN ACCURATE FOR ELECTRICAL WORK ONLY.

ALL DIMENSIONS ARE IN MILLIMETERS UNLESS OTHERWISE SHOWN

FOR REDUCED PLANS ORIGINAL SCALE IS IN MILLIMETERS 0 20 40 60 80

DGN FILE =>t:\13103\ms\pse\sas struc\ccr\sas ccr 51\174s1.dgn
USERNAME =>reyes!

CU 04251 — EA 0120F1

LAST REVISION 00-00-00 — DATE PLOTTED => 1/23/2008 TIME PLOTTED => 11:09:57 AM

DIST	COUNTY	ROUTE	KILOMETER POST TOTAL PROJECT	SHEET No	TOTAL SHEETS
04	SF	80	13.2/13.9	176 S1C	1204

REGISTERED ELECTRICAL ENGINEER DATE

PLANS APPROVAL DATE

REGISTERED PROFESSIONAL ENGINEER No. Exp. STATE OF CALIFORNIA

PB POWER, Inc.
A Parsons Brinckerhoff Company
303 Second St., Suite 700N
San Francisco, CA 94107-1317

The State of California or its officers or agents shall not be responsible for the accuracy or completeness of electronic copies of this plan sheet.

Caltrans now has a web site! To get to the web site, go to http://www.dot.ca.gov

Caltrans Metric

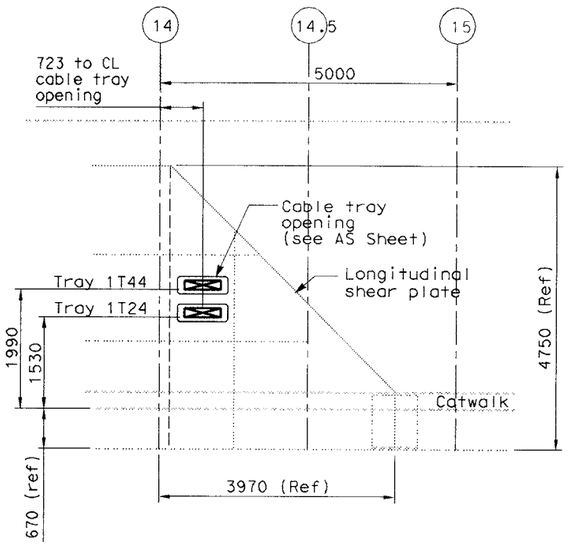

DETAIL 1

Cable penetration thru longitudinal shear plate
Scale 1:50

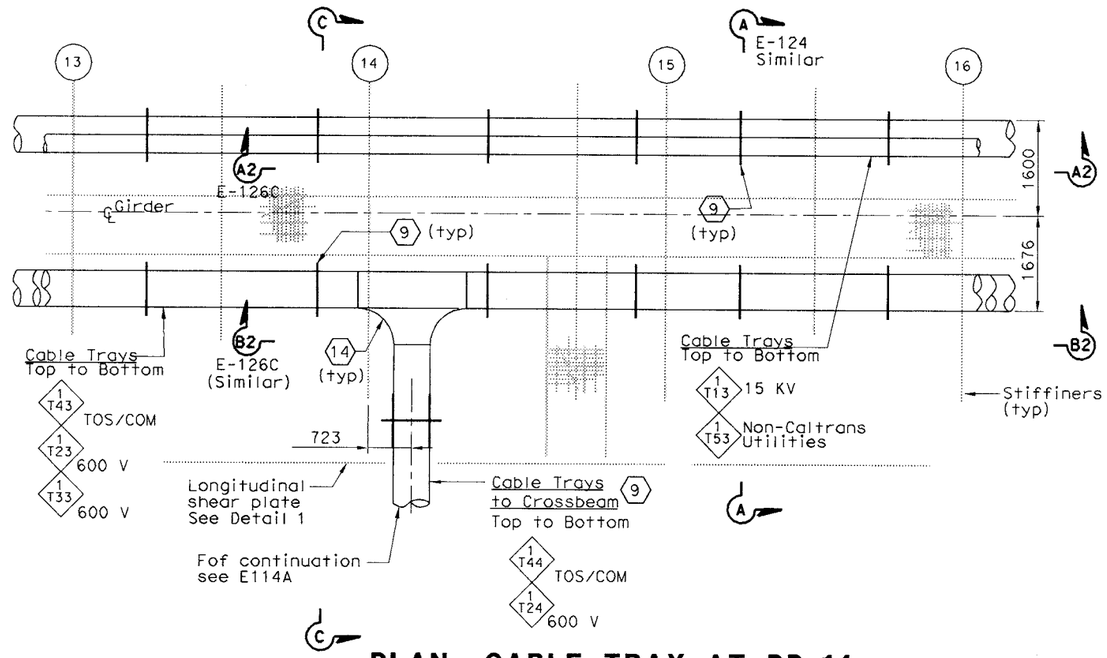

PLAN- CABLE TRAY AT PP-14

Scale 1:50

SHEET NOTES:

1. Type I, for cable tray supports details, see AS sheets.
2. Type II, for cable tray supports details, see AS sheets.
3. Type V, for cable tray supports details, see AS sheets.
4. Type VI, for cable tray supports details, see AS sheets.
5. Type VII, for cable tray supports details, see AS sheets.
6. Type VIIA, for cable tray supports details, see AS sheets.
7. Type VIIB, for cable tray supports details, see AS sheets.
8. The Contractor to provide cable tray support at each ends of cable tray fitting as required.
9. For cable tray support see AS-Sheets.
10. Pull Box PB-2A and 2L shall be located on top of stiffener. The Contractor shall provide strut channel for support installed in field.
11. The Contractor shall provide strut channel on top of stiffener for conduit support and installed in field. See plan for location and quantity of conduits.
12. The Contractor to provide grounding bushing at each end of the conduit.
13. The Contractor to provide secondary support installed by field. See Detail 2.
14. Cable tray tee fitting shall be 305 mm radius.

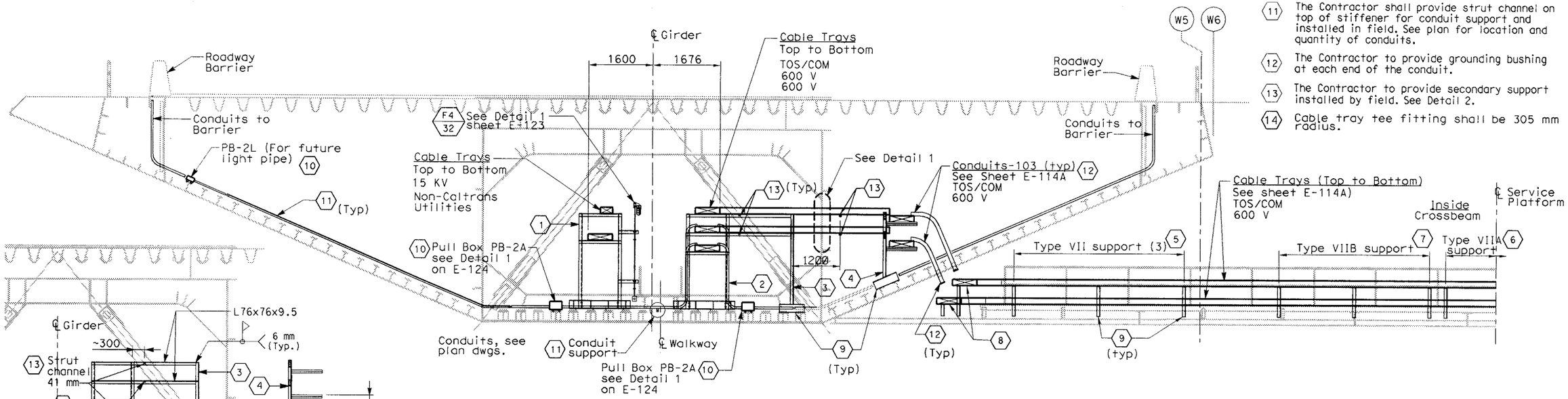

SECTION C - C

(Cable Tray and Support to Crossbeam Panel Point PP-14)
Scale 1:50

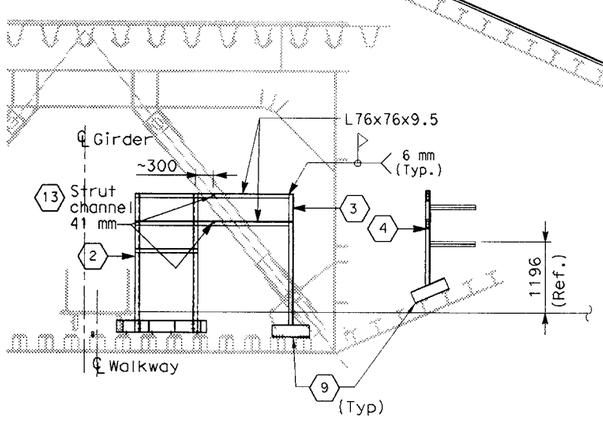

DETAIL 2

Field Cable Tray Support
Scale 1:50

RFI#919	R01
RFI#861	R00
RFI#811	R00
RFI#794	R01
RFI#793	R00

DETAILS
SAS SUPERSTRUCTURE GIRDER WESTBOUND TYPICAL TRAY AND CONDUIT INSTALLATION

SCALE AS NOTED

E-124A

REVISED BY	DATE	DATE REVISED
CALCULATED/DESIGNED BY		
CHECKED BY		
DESIGN OVERSIGHT	BEHZAD GOLEMOHAMMADI	

STATE OF CALIFORNIA - DEPARTMENT OF TRANSPORTATION

Caltrans

FOR REDUCED PLANS ORIGINAL 0 20 40 60 80

DGN FILE =>t:\13103\ms\pse\sas struc\rfi\sas rfi 793-completed as shts. see cco 42s1\176s1.dgn

LAST REVISION 00-00-00 DATE PLOTTED => 1/23/2008 TIME PLOTTED => 11:09:58 AM

DIST	COUNTY	ROUTE	KILOMETER POST TOTAL PROJECT	SHEET No	TOTAL SHEETS
04	SF	80	13.2/13.9	176 S2C	1204

Caltrans Metric

REGISTERED ELECTRICAL ENGINEER DATE

PLANS APPROVAL DATE

REGISTERED PROFESSIONAL ENGINEER No. Exp. ELECTRICAL STATE OF CALIFORNIA

PB POWER, Inc.
A Parsons Brinckerhoff Company
303 Second St., Suite 700N
San Francisco, CA 94107-1317

The State of California or its officers or agents shall not be responsible for the accuracy or completeness of electronic copies of this plan sheet.

Caltrans now makes certain electronic data available to the public. Please visit the Caltrans website at http://www.dot.ca.gov

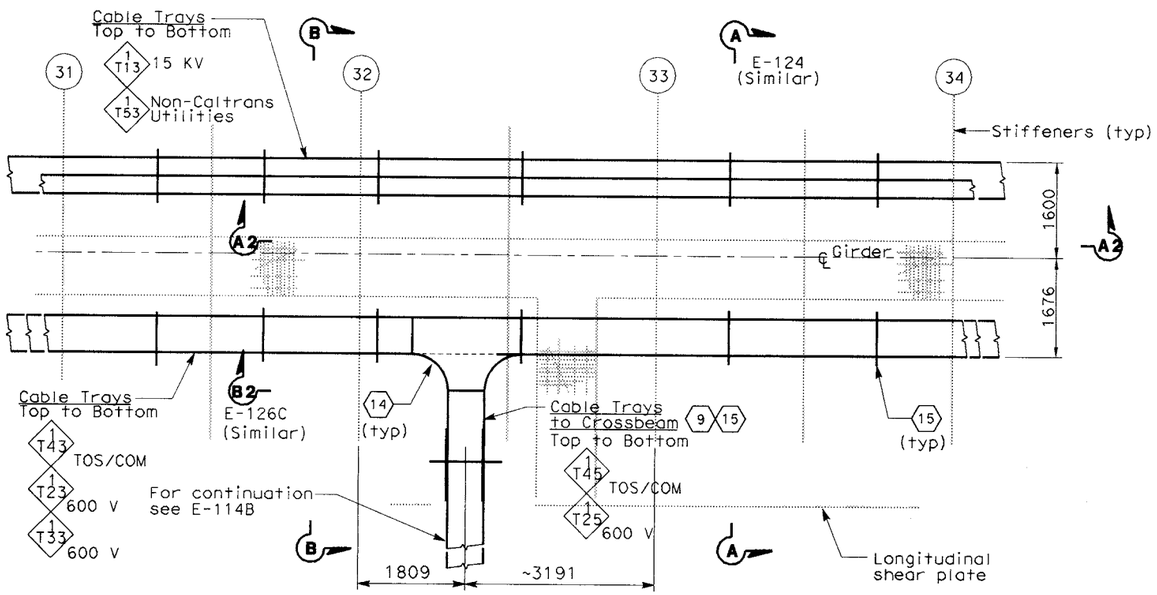

PLAN- CABLE TRAY AT PP 32

(SIMILAR FOR LOCATION AT PP 50, PP80 and PP-110)
Scale 1:50

SHEET NOTES:

1. Type I, for cable tray supports details, see AS sheets.
2. Type II, for cable tray supports details, see AS sheets.
3. Type V, for cable tray supports details, see AS sheets.
4. Type VI, for cable tray supports details, see AS sheets.
5. Type VII, for cable tray supports details, see AS sheets.
6. Type VIIA, for cable tray supports details, see AS sheets.
7. Type VIIB, for cable tray supports details, see AS sheets.
8. The Contractor to provide cable tray support at each ends of cable tray fitting as required.
9. For tray numbers to PP 50, PP-80 and PP-110, see sheet E-114B.
10. Pull Box PB-2A and 2L shall be located on top of stiffiner. The Contractor shall provide strut channel for support installed in field.
11. The Contractor shall provide strut channel on top of stiffiner for conduit support and installed in field.
12. The Contractor to provide grounding bushing at each end of the conduit.
13. The Contractor to provide suitable secondary tray support installed by field. See Detail 2.
14. For cable tray support see AS-Sheets.
15. Cable tray tee fitting shall be 305mm.

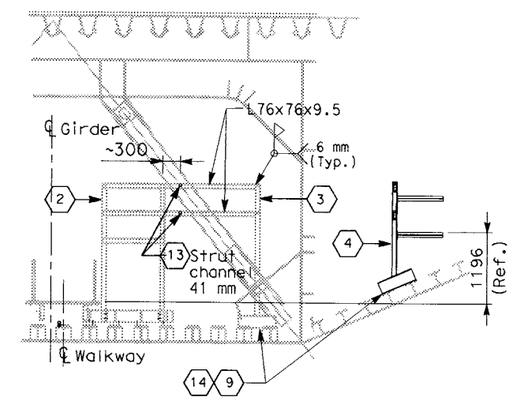

DETAIL 2

Field Cable Tray Support
Scale 1:50

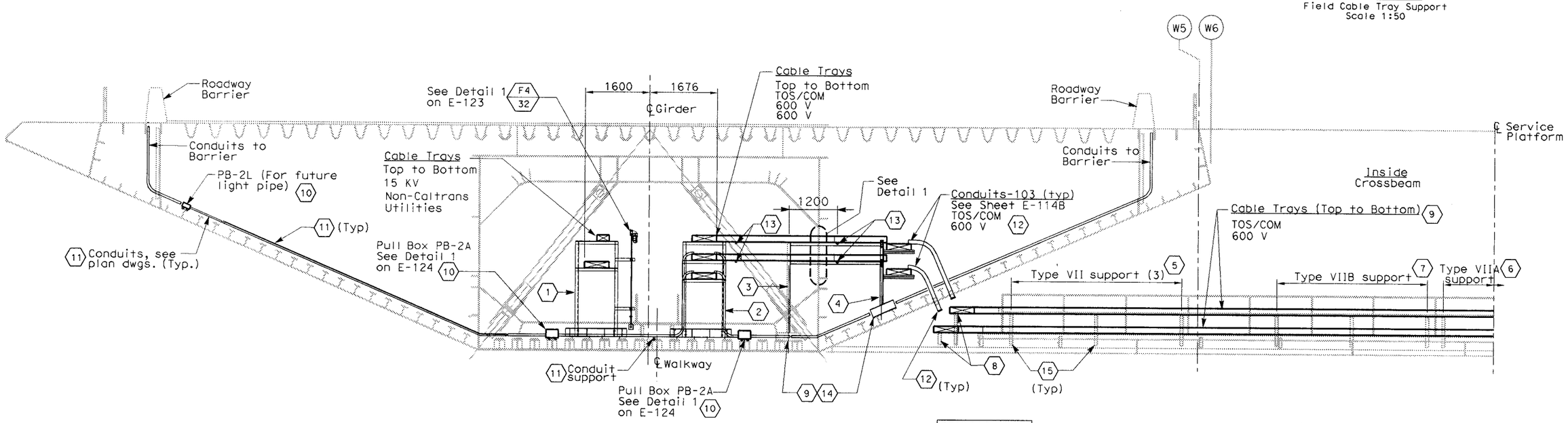

SECTION B-B

(Typical Cable Tray and Support to Crossbeam PP-32, PP-50, PP-80 and PP-110)
Scale 1:50

RFI#919	R01
RFI#861	R00
RFI#811	R00
RFI#794	R01
RFI#793	R00

DETAILS
SAS SUPERSTRUCTURE GIRDER WESTBOUND TYPICAL TRAY AND CONDUIT INSTALLATION

SCALE AS NOTED

E-124B

ALL DIMENSIONS ARE IN MILLIMETERS UNLESS OTHERWISE SHOWN

FOR REDUCED PLANS ORIGINAL 0 20 40 60 80

DGN FILE =>t:\13103\ms\pse\sas struc\rfi\sas rfi 793-completed as shts. see cco 42s1\176s2.dgn

CALCULATED/ DESIGNED BY	FK	DATE 08/02	REVISED BY	DATE REVISED	IAH 3/04
CHECKED BY	IAH	08/02			

DESIGN OVERSIGHT
BEHZAD GOLEMOHAMMADI

STATE OF CALIFORNIA - DEPARTMENT OF TRANSPORTATION
Caltrans

LAST REVISION 00-00-00

DATE PLOTTED => 1/23/2008
TIME PLOTTED => 11:09:59 AM

DIST	COUNTY	ROUTE	KILOMETER POST TOTAL PROJECT	SHEET No	TOTAL SHEETS
04	SF	80	13.2/13.9	178C	1204

REGISTERED ELECTRICAL ENGINEER DATE

12-6-04
PLANS APPROVAL DATE

PB POWER, Inc.
A Parsons Brinckerhoff Company
303 Second St., Suite 700N
San Francisco, CA 94107-1317

REGISTERED PROFESSIONAL ENGINEER NO. EXP. ELECTRICAL STATE OF CALIFORNIA

The State of California or its officers or agents shall not be responsible for the accuracy or completeness of electronic copies of this plan sheet.

Caltrans now has a web site! To get to the web site, go to http://www.dot.ca.gov

Caltrans Metric

CABLE TRAY SUPPORT SCHEDULE

Item	Type	Detail Sheet	Item	Type	Detail Sheet
1	VA	E-122	6	1	AS-7
2	VB	E-122	7	2	AS-7
3	VC	E-122	8	3	AS-7
4	VD	E-122	9	4	AS-7
5	VE	E-122A	10	5	AS-7

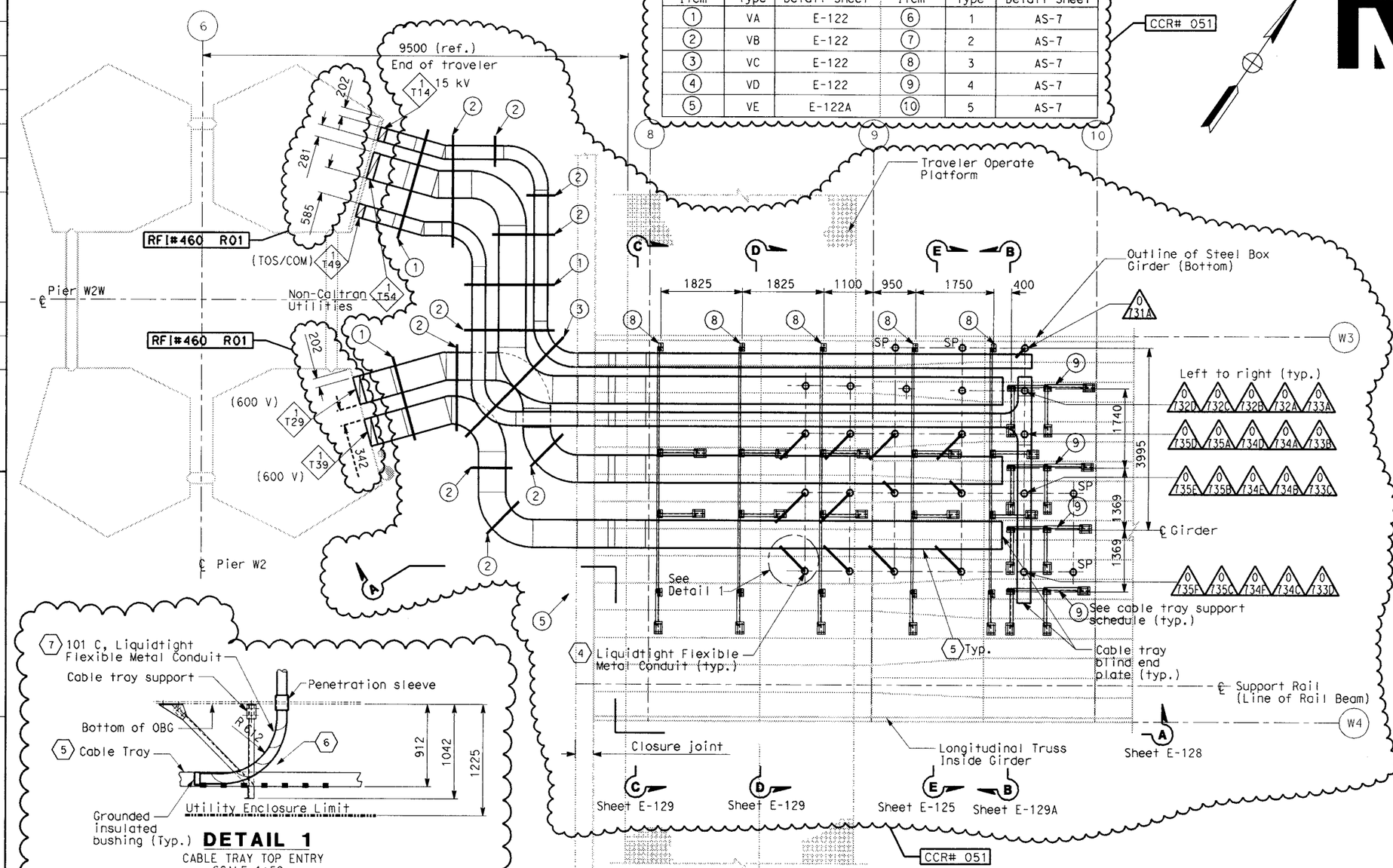

PARTIAL GIRDER PLAN
CABLE TRAY LAYOUT

SCALE 1:50

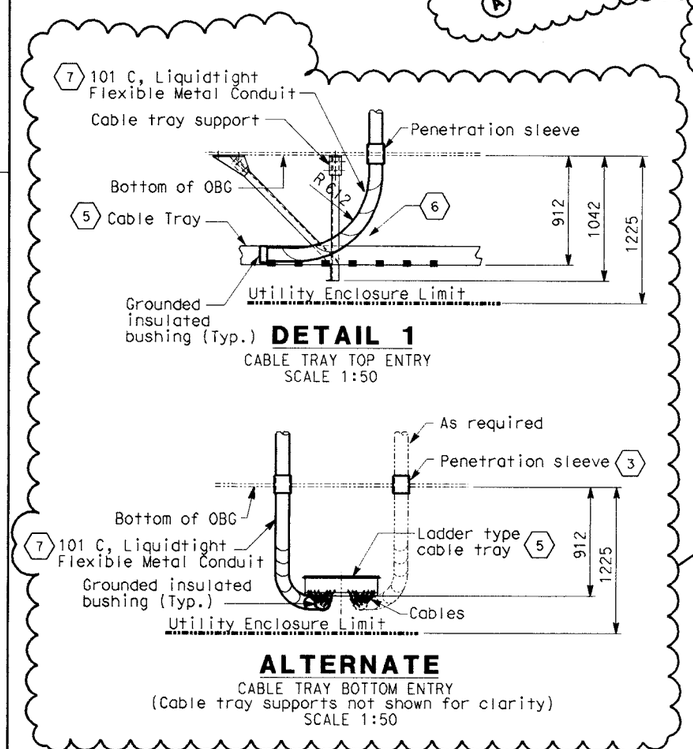

DETAIL 1
CABLE TRAY TOP ENTRY
SCALE 1:50

ALTERNATE
CABLE TRAY BOTTOM ENTRY
(Cable tray supports not shown for clarity)
SCALE 1:50

SHEET NOTES:

1. For cable tray supports details, see Cable Tray Support Schedule table. CCR# 051
2. Cable trays shall be as specified per specification unless noted otherwise.
3. Cable and location of penetrations thru girder plate. See Utility Detail No. 1 and Utility Layout respectively of Superstructure and Tower Drawings. To prevent moisture from passing inside the sleeves, the Contractor shall install sealant after cables are pulled. Spare penetrations shall be plugged and capped.
4. For continuation of conduit to cable trays inside OBG see E-126A.
5. Cable trays shall be anchored to supports and shall have solid cover with heavy duty cover clamps.
6. Install neoprene rubber around cable tray cover opening for protection to liquidtight flexible metal conduits as it enter the cable tray. Seal opening as needed.
7. Liquidtight flexible metal conduits shall be anchored to supports or cable trays.
8. Contractor may adjust the location of cable tray supports below W2 Pier Cap Beam to suit field condition and provide additional seismic bracing as required.

CCR# 051

NOTES:

1. References:
   - For circuit and conduit/cable tray schedules, see sheets starting at E-401.
   - For locations of cable tray support embeds, see AS sheets.
2. For other related work, not shown on this sheet, see Electrical Special Provisions.
3. For actual conduit locations, see girder level, cable tray and conduits plans. See sheets E-96 thru E-101.
4. For cable tray support, embedded unistrut, and cable tray locations are shown in scaled locations.

DETAILS
SAS SUPERSTRUCTURE GIRDER WESTBOUND
TYPICAL TRAY AND CONDUIT INSTALLATION AT PIER W2W

SCALE AS NOTED

ALL DIMENSIONS ARE IN MILLIMETERS UNLESS OTHERWISE SHOWN

FOR REDUCED PLANS ORIGINAL 0 20 40 60 80

DGN FILE =>t:\13103\ms\pse\sas struc\ccr\sas ccr 51\178.dgn

DATE PLOTTED => 1/23/2008
TIME PLOTTED => 11:09:59 AM

LAST REVISION 00-00-00

E-126

STATE OF CALIFORNIA - DEPARTMENT OF TRANSPORTATION

Caltrans

DESIGN OVERSIGHT
BEHZAD GOLEMOHAMMADI

CALCULATED/DESIGNED BY
CHECKED BY
FK
IAH
DATE 08/02
08/02
REVISED BY
DATE REVISED

DIST	COUNTY	ROUTE	KILOMETER POST TOTAL PROJECT	SHEET No	TOTAL SHEETS
04	SF	80	13.2/13.9	178 S1C	1204

Caltrans Metric

REGISTERED ELECTRICAL ENGINEER DATE

PLANS APPROVAL DATE

REGISTERED PROFESSIONAL ENGINEER NO. EXP. STATE OF CALIFORNIA

PB POWER, Inc.
A Parsons Brinckerhoff Company
303 Second St., Suite 700N
San Francisco, CA 94107-1317

The State of California or its officers or agents shall not be responsible for the accuracy or completeness of electronic copies of this plan sheet.

Caltrans now has a web site! To get to the web site, go to http://www.dot.ca.gov

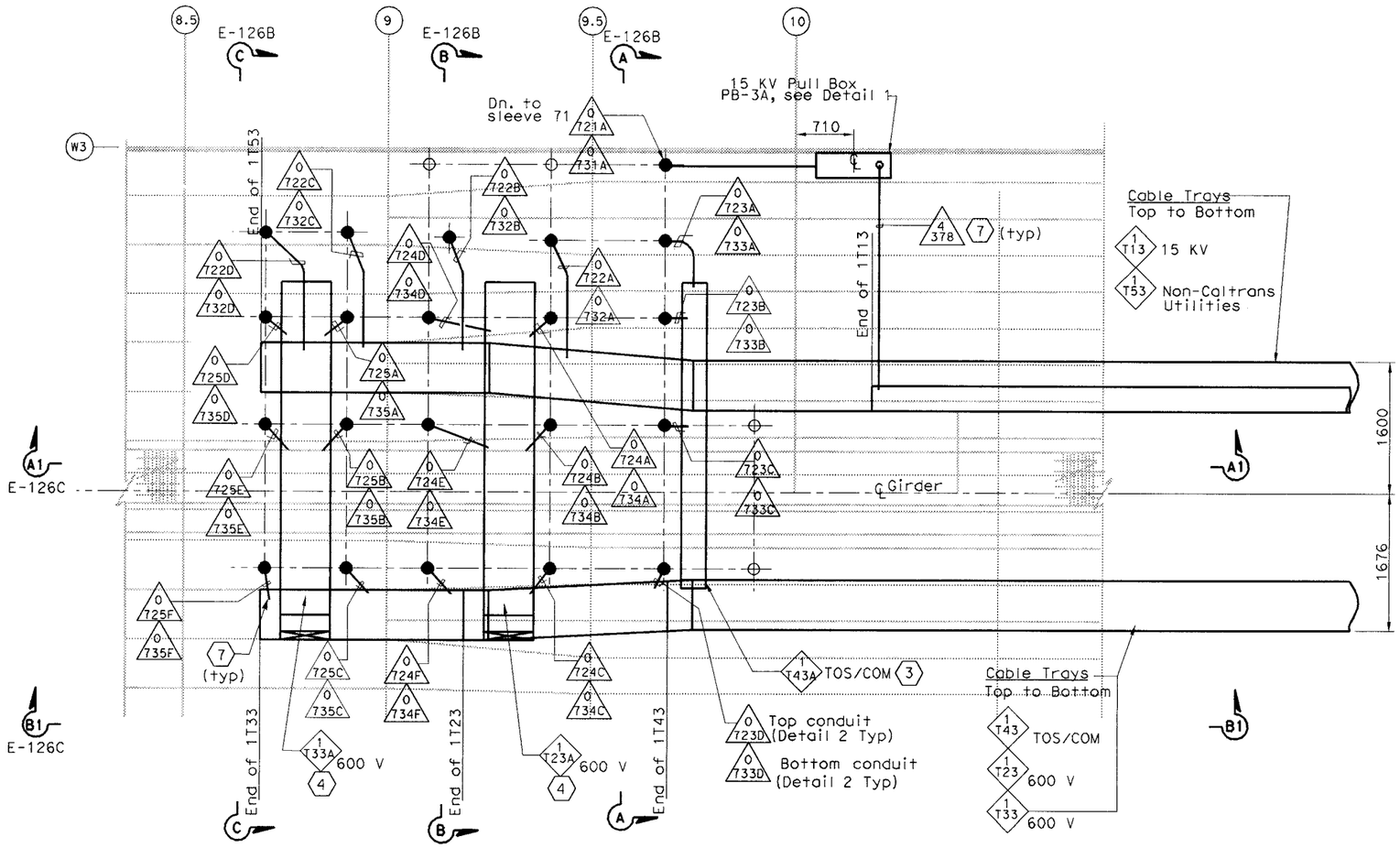

PARTIAL GIRDER CABLE TRAY-PLAN (6)

SCALE 1:150

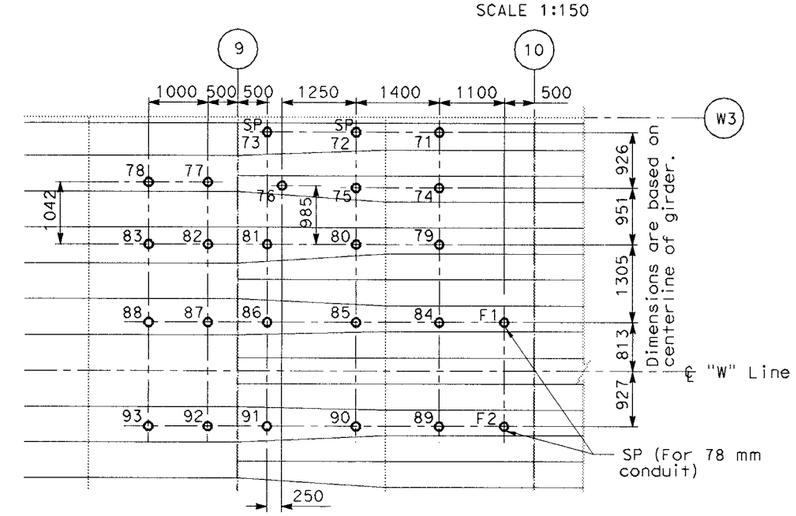

PIPE SLEEVE LOCATION-PLAN (6)

SCALE 1:100

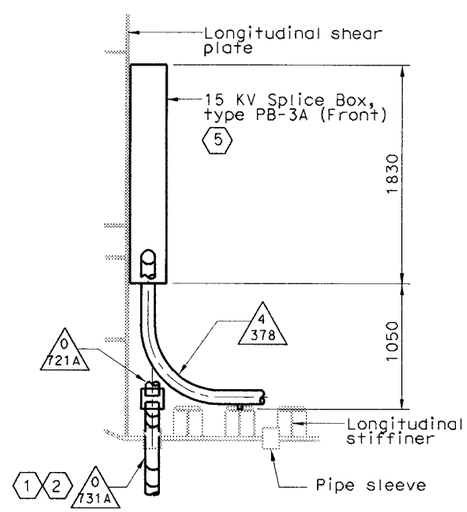

DETAIL 1

SCALE 1:50

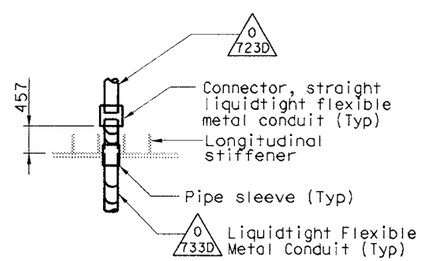

DETAIL 2

SCALE 1:50

SHEET NOTES:

1. To prevent moisture from entering inside the conduit, Contractor to seal the end of conduit after cables are pulled. Conduit without cables inside shall be pluged and capped for future use.
2. Down to pull box, for details see sheet E-126.
3. Provide drop out tray fitting.
4. Provided vertical bend segment type fitting. Fitting radius shall be 305mm.
5. 15 KV splice box is bolted to longitudinal shear plate and installed by field.
6. See table A sheet E-126B.
7. Provide insulated ground bushing at end of conduit.

NOTES:

1. References:
   - For circuit and conduit/cable tray schedules, see sheets starting at E-401.
2. (SP) Denotes spare pipe sleeve for future 103 mm conduit. Contractor to provide thread cap at each end.
3. For cable tray supports details, see AS sheets.
4. Cable trays fittings shall be 610 radius.

RFI# 861 R00
RFI# 1038 R00
RFI# 793 R00

DETAILS
SAS SUPERSTRUCTURE GIRDER WESTBOUND CABLE TRAY AND CONDUIT AT PIER W2W

SCALE AS NOTED

THIS PLAN ACCURATE FOR ELECTRICAL WORK ONLY.

E-126A

STATE OF CALIFORNIA - DEPARTMENT OF TRANSPORTATION

DESIGN OVERSIGHT: BEHZAD GOLEMOHAMMADI

CALCULATED/DESIGNED BY | CHECKED BY | DATE REVISED BY | DATE REVISED

FOR REDUCED PLANS ORIGINAL 0 20 40 60 80

DGN FILE =>t:\13103\ms\pse\sas struc\rfi\sas rfi 793-completed as shts. see cco 42s1\178s1.dgn

LAST REVISION 00-00-00 | DATE PLOTTED => 1/23/2008 | TIME PLOTTED => 11:10:00 AM

DIST	COUNTY	ROUTE	KILOMETER POST TOTAL PROJECT	SHEET No.	TOTAL SHEETS
04	SF	80	13.2/13.9	183C	1204

REGISTERED ELECTRICAL ENGINEER DATE

PLANS APPROVAL DATE

REGISTERED PROFESSIONAL ENGINEER NO. EXP. ELECTRICAL STATE OF CALIFORNIA

PB POWER, Inc.
A Parsons Brinckerhoff Company
303 Second St., Suite 700N
San Francisco, CA 94107-1317

The State of California or its officers or agents shall not be responsible for the accuracy or completeness of electronic copies of this plan sheet.

Caltrans now has a web site! To get to the web site, go to: http://www.dot.ca.gov

Caltrans Metric

NOTE:

1. References:
   - For SAS Superstructure Girder West bound plan, see sheet E-101.
   - For SAS Main Span West bound typical section, see, sheets E-124, E-124A & E-124B.

SHEET NOTES:

(1) For utility opening detail, see structural sheets.

(2) For Type I cable tray support structure, see AS-sheets.

(3) For Type VIII cable tray support structure, see AS-sheets.

(4) For Type IX cable tray support structure, see AS-sheets.

(5) For Type II Cable Tray Support Structure, see AS-sheets. (Omit bottom rung).

(6) For Type X Cable Tray Support Structure, see AS-sheets.

(7) Type I Cable Tray Support Structure modified. (Omit stanchion mounted lighting supports). For details, see AS-sheets.

(8) Type II Cable Tray Support Structure modified. (Omit bottom rung). For details, see AS-sheets.

(9) Type VIII support with the exception of angle steel bracket oriented as shown on Detail 1. For Details, see AS-sheets.

(10) For Type XI cable tray support structure, see AS-sheets.

(11) For cable tray support see drawing AS-160.

RFI# 919 R01
RFI# 845 R00

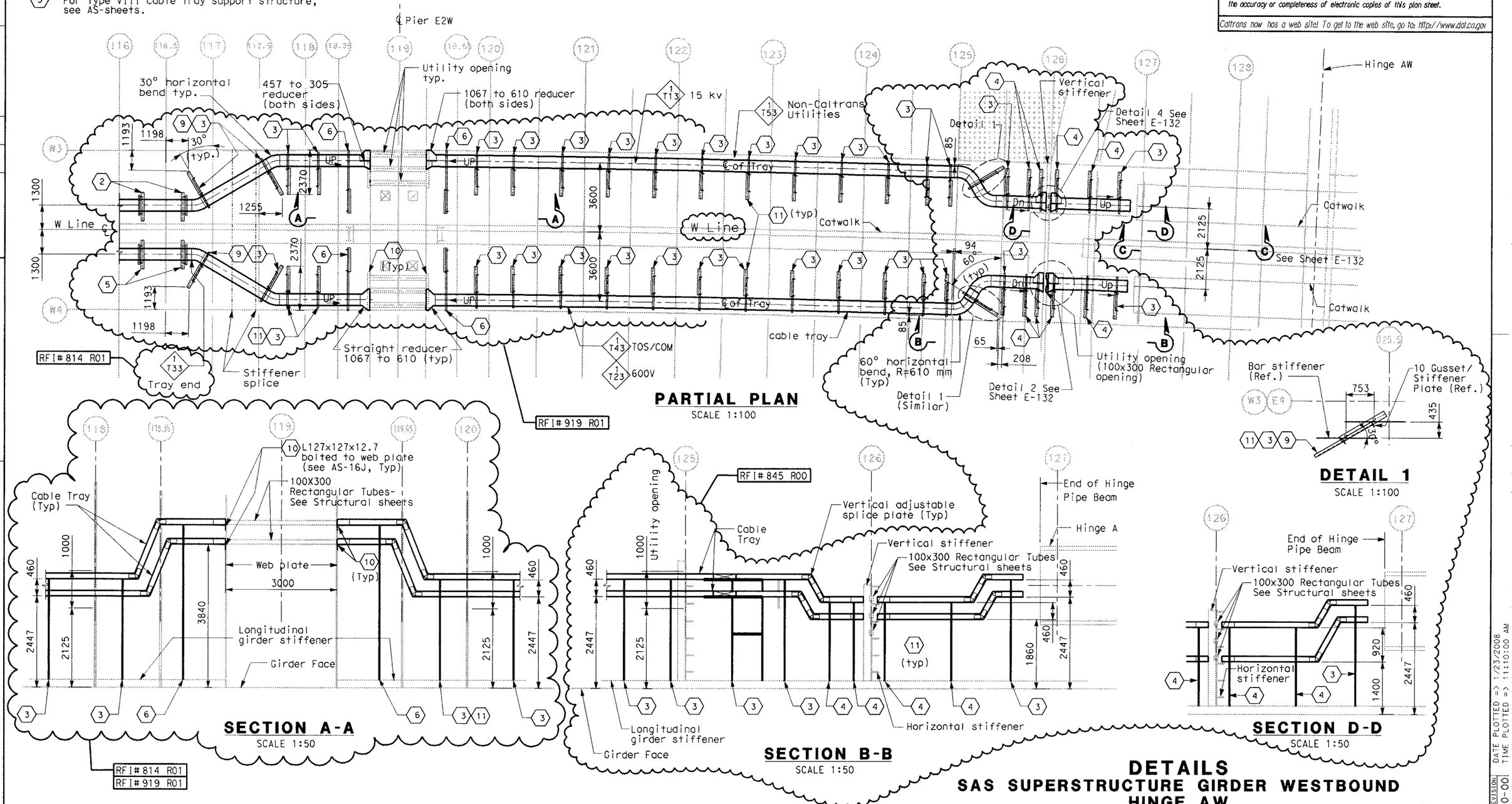

DETAILS
SAS SUPERSTRUCTURE GIRDER WESTBOUND
HINGE AW
SCALE AS NOTED

E-131

THIS PLAN ACCURATE FOR ELECTRICAL WORK ONLY.

ALL DIMENSIONS ARE IN MILLIMETERS UNLESS OTHERWISE SHOWN

FOR REDUCED PLANS ORIGINAL 0 20 40 60 80

DGN FILE =>t:\13103\ms\pse\sas struc\rfi\sas crfi 003\183r01.dgn

REVISED BY	DATE REVISED
IAH	3/04

CALCULATED/ DESIGNED BY	DATE
FK	08/02

CHECKED BY	
IAH	08/02

DESIGN OVERSIGHT
BEHZAD GOLEMOHAMMADI

STATE OF CALIFORNIA - DEPARTMENT OF TRANSPORTATION
Caltrans

LAST REVISION 00-00-00

DATE PLOTTED => 1/23/2008
TIME PLOTTED => 11:10:00 AM

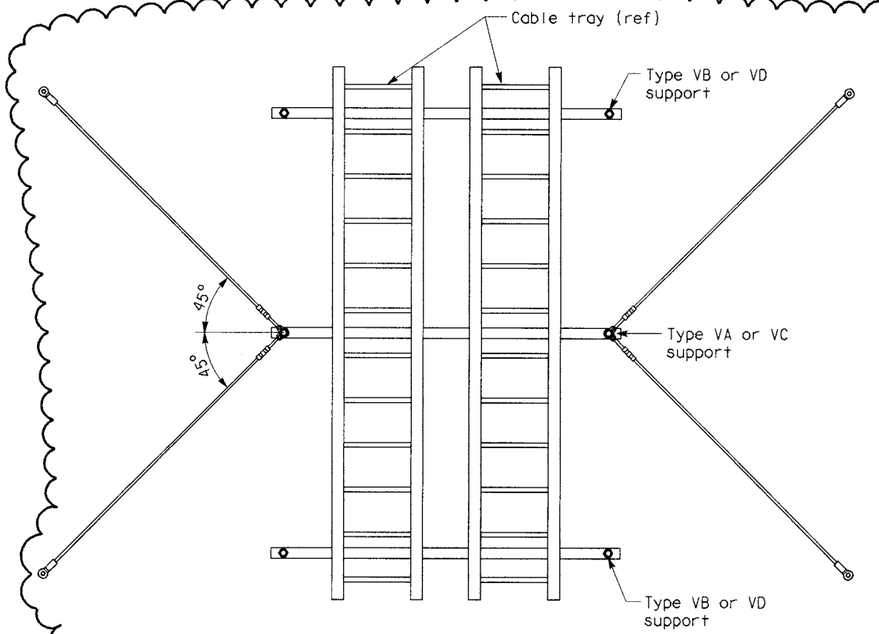

PLAN VIEW - CABLE TRAY SUPPORTS

MATERIAL LIST

Item No.	Description	Type VA thru VE
A	Deleted	
B	Deleted	
C	Threaded steel hanger rod, 13 mm diameter	-
D	Strut channel spring nut, lock washer and hex bolt	X
E	Cable tray clamp with hardware	X
F	Strut hanger trapeze hardware kit	X
G	Deleted	
H	Deleted	
J	Rod hanger expansion anchor, 13 mm dia, 100 mm minimum depth embedment and allowable load (in tension) of 4.45 kN	X
K	Deleted	
L	Deleted	
M	Seismic bracing kit (includes 4-stake eyes, 4-oval sleeves, 4-URC clips and 4-3048mm long wire cables)	X
N	Strut channel, 41 mm x 82 mm	X
P	Expansion/sleeve anchors 13 mm dia hex type, embed 100 mm minimum	X
Q	Flat washer 13 mm dia bolt size	X
R	Deleted	
S	Threaded rod (13 mm) with stiffener & stiffener clips	X
T	Hex nut and washer for expansion anchor	X
U	Deleted	
V	Deleted	
W	Deleted	

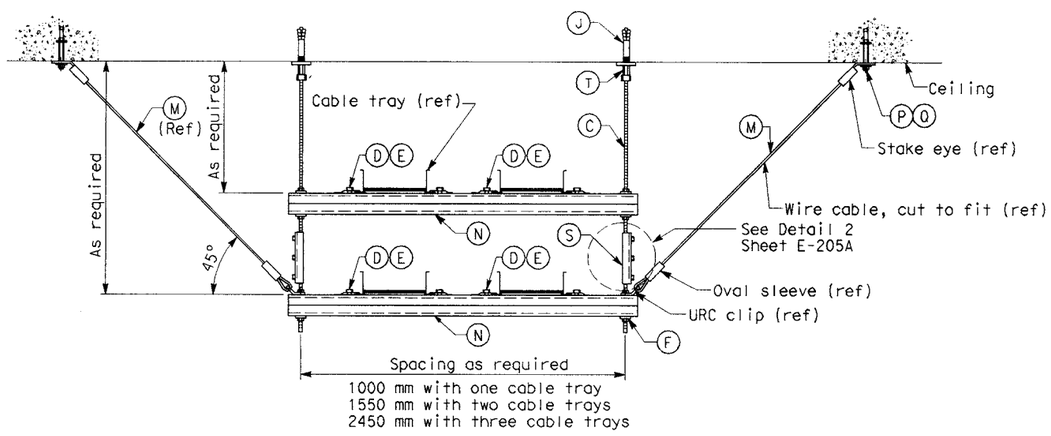

TYPE VC CABLE TRAY SUPPORT ELEVATION

TYPE VD CABLE TRAY SUPPORT ELEVATION WITHOUT (ITEM M) SEISMIC BRACING KIT

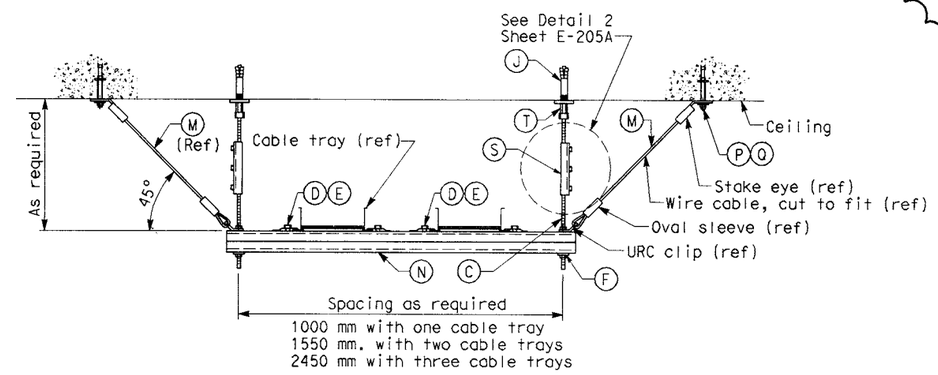

TYPE VA CABLE TRAY SUPPORT ELEVATION

TYPE VB CABLE TRAY SUPPORT ELEVATION WITHOUT (ITEM M) SEISMIC BRACING KIT

CCR# 051

DETAILS
SAS SUPERSTRUCTURE GIRDER EASTBOUND TYPICAL TRAY SUPPORTS
NO SCALE

E-205

DIST	COUNTY	ROUTE	KILOMETER POST TOTAL PROJECT	SHEET No	TOTAL SHEETS
04	SF	80	13.2/13.9	230C	1204

REGISTERED ELECTRICAL ENGINEER DATE

PLANS APPROVAL DATE

REGISTERED PROFESSIONAL ENGINEER No. Exp. ELECTRICAL STATE OF CALIFORNIA

PB POWER, Inc.
A Parsons Brinckerhoff Company
303 Second St., Suite 700N
San Francisco, CA 94107-1317

The State of California or its officers or agents shall not be responsible for the accuracy or completeness of electronic copies of this plan sheet.

Caltrans now has a web site! To get to the web site, go to http://www.dot.ca.gov

Caltrans Metric

REVISED BY	DATE REVISED

CALCULATED/DESIGNED BY	RG	DATE 08/02
CHECKED BY	ES	08/02

DESIGN OVERSIGHT
BEHZAD GOLEMOHAMMADI

STATE OF CALIFORNIA - DEPARTMENT OF TRANSPORTATION
Caltrans

THIS PLAN ACCURATE FOR ELECTRICAL WORK ONLY.

ALL DIMENSIONS ARE IN MILLIMETERS UNLESS OTHERWISE SHOWN

FOR REDUCED PLANS ORIGINAL 0 20 40 60 80

DGN FILE =>t:\13103\ms\pse\sas struc\ccr\sas ccr 51\230.dgn

CU 04251 EA 0120F1

LAST REVISION 100-00-00 DATE PLOTTED => 1/23/2008 TIME PLOTTED => 11:10:01 AM

DIST	COUNTY	ROUTE	KILOMETER POST TOTAL PROJECT	SHEET No	TOTAL SHEETS
04	SF	80	13.2/13.9	230 S1C	1204

REGISTERED ELECTRICAL ENGINEER DATE

PLANS APPROVAL DATE

REGISTERED PROFESSIONAL ENGINEER MARCELL FUMIO TAKAHI No. E 8651 Exp. 9/30/2008 ELECTRICAL STATE OF CALIFORNIA

PB POWER, Inc.
A Parsons Brinckerhoff Company
303 Second St., Suite 700N
San Francisco, CA 94107-1317

The State of California or its officers or agents shall not be responsible for the accuracy or completeness of electronic copies of this plan sheet.

Caltrans now has a web site! To get to the web site, go to http://www.dot.ca.gov

Caltrans Metric

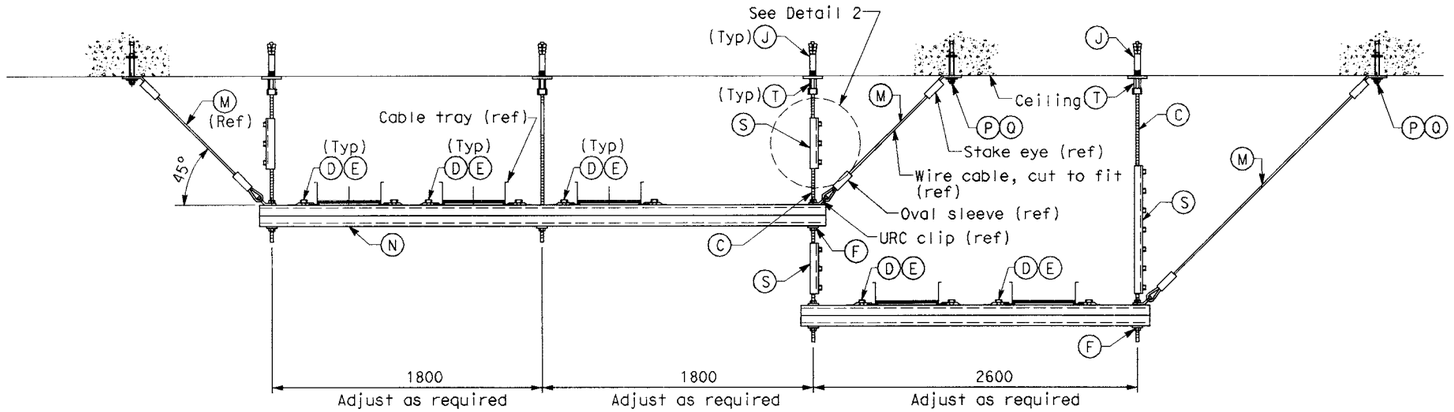

TYPE VE CABLE TRAY SUPPORT ELEVATION

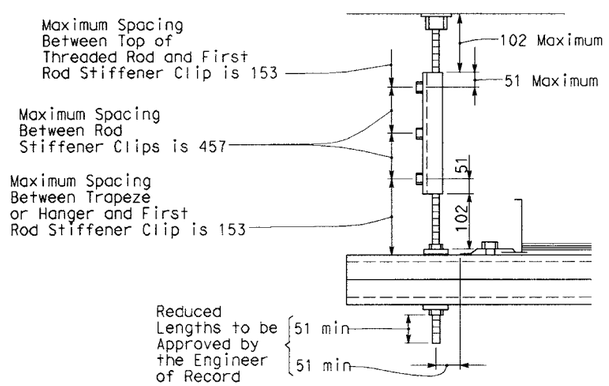

DETAIL 2

MATERIAL LIST

Item No.	Description	Type VA thru VE
A	Not Used	
B	Not Used	
C	Threaded steel hanger rod, 13 mm diameter	-
D	Strut channel spring nut, lock washer and hex bolt	X
E	Cable tray clamp with hardware	X
F	Strut hanger trapeze hardware kit	X
G	Not Used	
H	Not Used	
J	Rod hanger expansion anchor, 13 mm dia, 100 mm minimum depth embedment and allowable load (in tension) of 4.45 kN	X
K	Not Used	
L	Not Used	
M	Rod hanger seismic bracing kit (includes 4-stake eyes, 4-oval sleeves, 4-URC clips and 4-3048mm long wire cables) PW Industries part no. PW18-C26-10/C-SP-316SS or equal	X
N	Strut channel, 41 mm x 82 mm	X
P	Expansion/sleeve anchors 13 mm dia hex type, embed 100 mm minimum	X
Q	Flat washer 13 mm dia bolt size	X
R	Not Used	
S	Threaded rod (13 mm) with stiffener & stiffener clips	X
T	Rod coupler, hex nut and washer for expansion anchor	X
U	Not Used	
V	Not Used	
W	Not Used	

CCR# 051

DETAILS
SAS SUPERSTRUCTURE GIRDER EASTBOUND TYPICAL TRAY SUPPORTS
NO SCALE

E-205A

THIS PLAN ACCURATE FOR ELECTRICAL WORK ONLY.

ALL DIMENSIONS ARE IN MILLIMETERS UNLESS OTHERWISE SHOWN

REVISED BY	DATE	RG	DATE
DATE REVISED		ES	07/07

CALCULATED/DESIGNED BY
CHECKED BY

DESIGN OVERSIGHT
BEHZAD GOLEMOHAMMADI

STATE OF CALIFORNIA - DEPARTMENT OF TRANSPORTATION
Caltrans

FOR REDUCED PLANS ORIGINAL SCALE IS IN MILLIMETERS 0 20 40 60 80

DGN FILE =>f:\13103\ms\pse\sas struc\ccr\sas ccr 51\230s1.dgn
USERNAME =>revesl

CU 04251 EA 0120E1

LAST REVISION 00-00-00
DATE PLOTTED => 1/23/2008
TIME PLOTTED => 11:10:02 AM

DIST	COUNTY	ROUTE	KILOMETER POST TOTAL PROJECT	SHEET No	TOTAL SHEETS
04	SF	80	13.2/13.9	232 S1C	1204

REGISTERED ELECTRICAL ENGINEER DATE

PLANS APPROVAL DATE

REGISTERED PROFESSIONAL ENGINEER No. Exp. STATE OF CALIFORNIA

PB POWER, Inc.
A Parsons Brinckerhoff Company
303 Second St., Suite 700N
San Francisco, CA 94107-1317

The State of California or its officers or agents shall not be responsible for the accuracy or completeness of electronic copies of this plan sheet.

Caltrans now has a web site! To get to the web site, go to http://www.dot.ca.gov

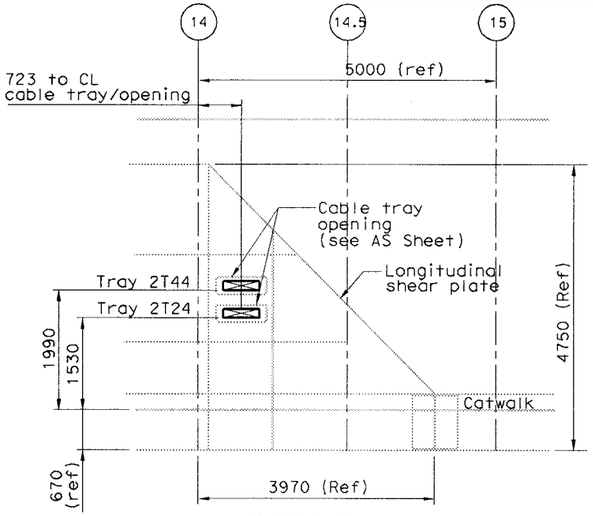

DETAIL 1

Cable pentration thru longitudinal shear plate
Scale 1:50

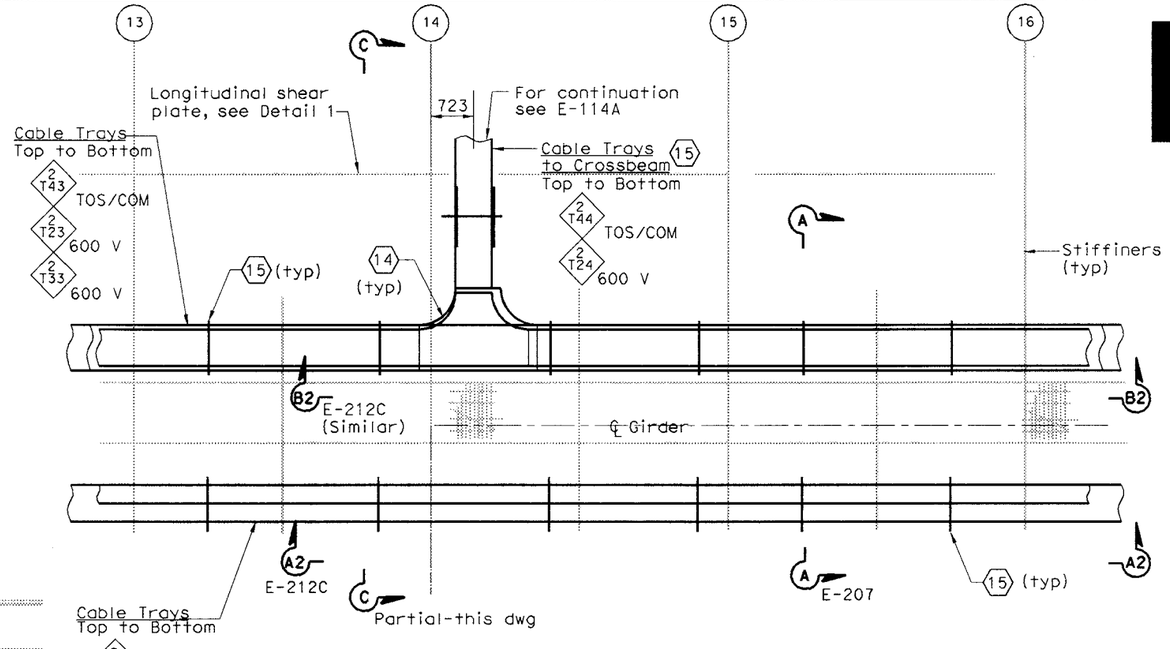

PLAN-TRAY SUPPORT AT PP-14

Scale 1:50

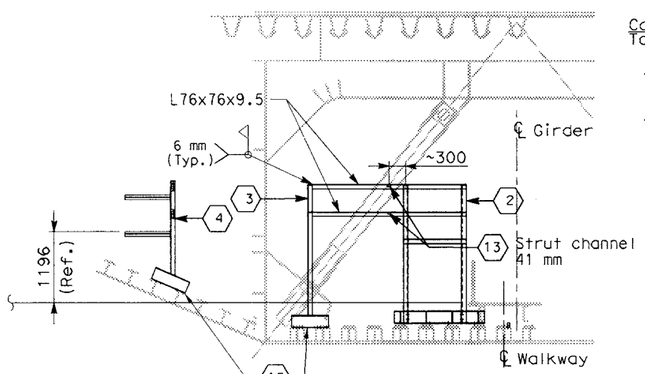

DETAIL 2

Field Cable Tray Support
Scale 1:50

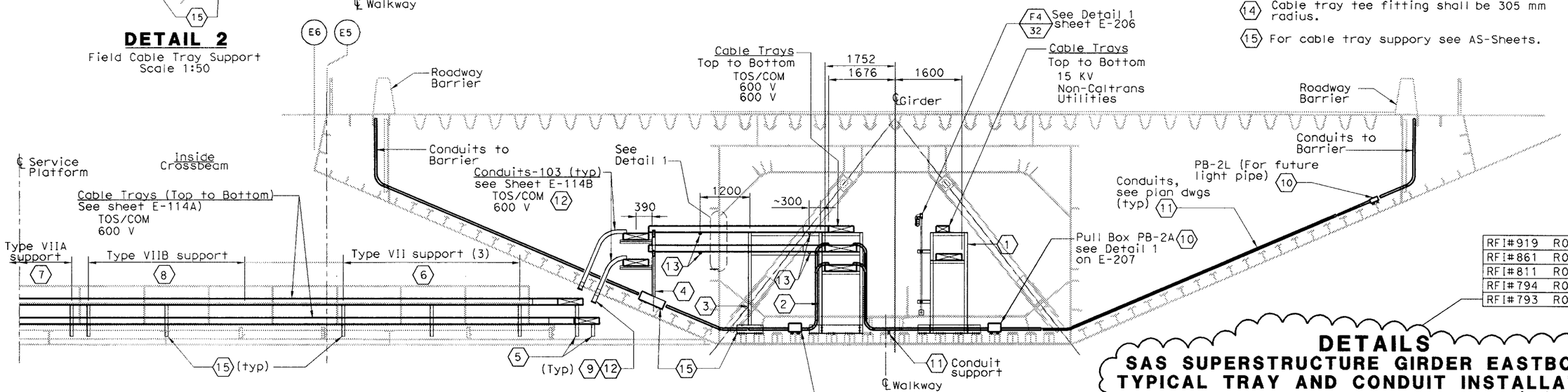

SECTION C-C

Cable Tray Support and Crossbeam
PANEL POINT PP 14
Scale 1:50

SHEET NOTES:

1. Type I, for cable tray supports details, see AS sheets.
2. Type II, for cable tray supports details, see AS sheets.
3. Type V, for cable tray supports details, see AS sheets.
4. Type VI, for cable tray supports details, see AS sheets.
5. The Contractor to provide cable tray support at each ends of cable tray fitting as required.
6. Type VII, for cable tray supports details, see AS sheets.
7. Type VIIA, for cable tray supports details, see AS sheets.
8. Type VIIB, for cable tray supports details, see AS sheets.
9. The Contractor to provide sealant after cables are pulled. Conduits without cables shall be pluged and capped at both ends.
10. Pull Box PB-2A and PB-2L shall be located on top of stiffiner. The Contractor shall provide strut channel for support installed in field.
11. The Contractor shall provide strut channel on top of stiffiner for conduit support and installed in field.
12. The Contractor to provide grounding bushing at each end of the conduit.
13. The Contractor to provide secondary support installed by field, see detail 2.
14. Cable tray tee fitting shall be 305 mm radius.
15. For cable tray suppory see AS-Sheets.

RFI#919	R01
RFI#861	R00
RFI#811	R00
RFI#794	R01
RFI#793	R00

DETAILS
SAS SUPERSTRUCTURE GIRDER EASTBOUND TYPICAL TRAY AND CONDUIT INSTALLATION

SCALE AS NOTED

E-207A

ALL DIMENSIONS ARE IN MILLIMETERS UNLESS OTHERWISE SHOWN.

FOR REDUCED PLANS ORIGINAL 0 20 40 60 80

DGN FILE =>T:\13103\MS\pse\SAS Struc\RFI\SAS RFI 793-Completed AS shts. see CCO 42S1\232S1.dgn

STATE OF CALIFORNIA - DEPARTMENT OF TRANSPORTATION

Caltrans

DESIGN OVERSIGHT: BEHZAD GOLEMOHAMMADI

CALCULATED/DESIGNED BY | CHECKED BY | DATE REVISED BY | DATE REVISED

LAST REVISION 00-00-00 | DATE PLOTTED => 1/23/2008 | TIME PLOTTED => 2:19:33 PM

DIST	COUNTY	ROUTE	KILOMETER POST TOTAL PROJECT	SHEET No	TOTAL SHEETS
04	SF	80	13.2/13.9	232 S2C	1204

REGISTERED ELECTRICAL ENGINEER DATE

PLANS APPROVAL DATE

REGISTERED PROFESSIONAL ENGINEER No. Exp. STATE OF CALIFORNIA

PB POWER, Inc.
A Parsons Brinckerhoff Company
303 Second St., Suite 700N
San Francisco, CA 94107-1317

The State of California or its officers or agents shall not be responsible for the accuracy or completeness of electronic copies of this plan sheet.

Caltrans now has a web site! To get to the web site, go to http://www.dot.ca.gov

Caltrans Metric

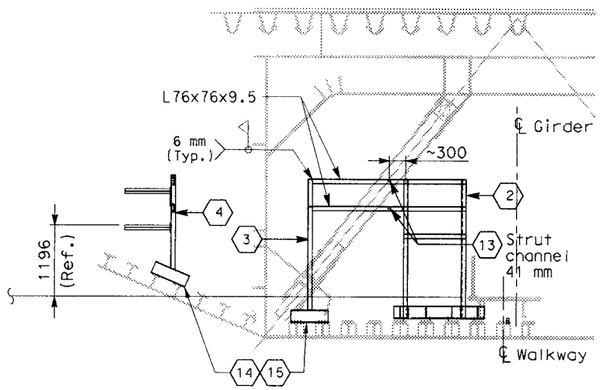

DETAIL 2
Field Cable Tray Support
Scale 1:50

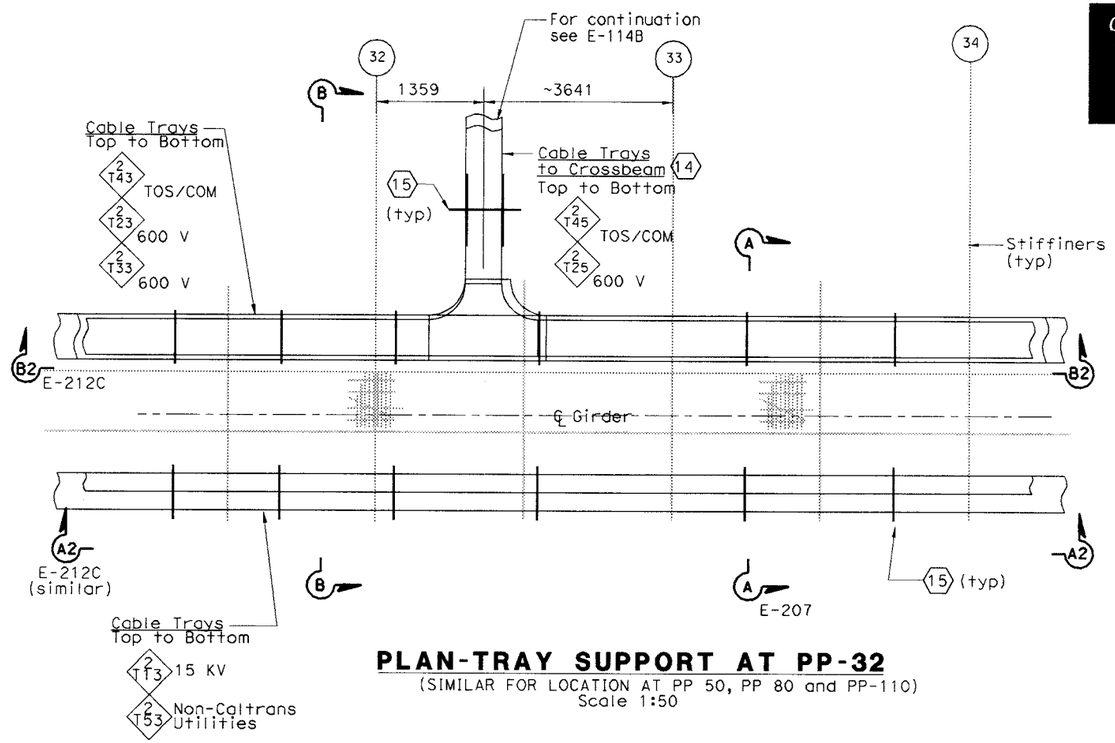

PLAN-TRAY SUPPORT AT PP-32
(SIMILAR FOR LOCATION AT PP 50, PP 80 and PP-110)
Scale 1:50

SHEET NOTES:

1. Type I, for cable tray supports details, see AS sheets.
2. Type II, for cable tray supports details, see AS sheets.
3. Type V, for cable tray supports details, see AS sheets.
4. Type VI, for cable tray supports details, see AS sheets.
5. The Contractor to provide cable tray support at each ends of cable tray fitting as required.
6. Type VII, for cable tray supports details, see AS sheets.
7. Type VIIA, for cable tray supports details, see AS sheets.
8. Type VIIB, for cable tray supports details, see AS sheets
9. The Contractor to provide sealant after cables are pulled. Conduits without cables shall be pluged and capped at both ends.
10. Pull Box PB-2A and PB-2L shall be located on top of stiffiner. The Contractor shall provide strut channel for support installed in field.
11. The Contractor shall provide strut channel on top of stiffiner for conduit support and installed in field.
12. The Contractor to provide grounding bushing at each end of the conduit.
13. The Contractor to provide secondary support installed by field.
14. For cable tray numbers to PP 50, PP 80 and PP 110, see sheet E-114B.
15. For cable tray support see AS-Sheets.

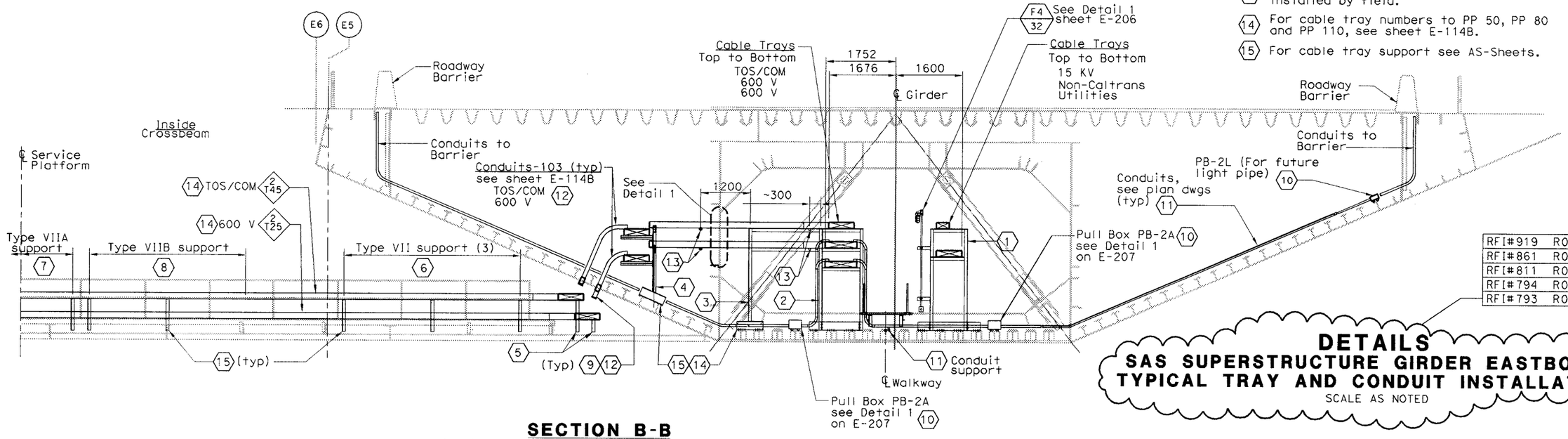

SECTION B-B
(Typical Cable Tray Support and Crossbeam)
PP 32, PP 50, PP 80 and PP-110
Scale 1:50

RFI#919	R01
RFI#861	R00
RFI#811	R00
RFI#794	R01
RFI#793	R00

DETAILS
SAS SUPERSTRUCTURE GIRDER EASTBOUND TYPICAL TRAY AND CONDUIT INSTALLATION
SCALE AS NOTED

ALL DIMENSIONS ARE IN MILLIMETERS UNLESS OTHERWISE SHOWN.

FOR REDUCED PLANS ORIGINAL 0 20 40 60 80

DGN FILE =>t:\13103\ms\pse\sas struc\rfi\sas rfi 793-completed as shts. see cco 42s1\232s2.dgn

E-207B

REVISED BY	DATE	DATE REVISED
CALCULATED/DESIGNED BY	CHECKED BY	

DESIGN OVERSIGHT
BEHZAD GOLEMOHAMMADI

STATE OF CALIFORNIA - DEPARTMENT OF TRANSPORTATION
Caltrans

LAST REVISION 00-00-00
DATE PLOTTED => 1/23/2008
TIME PLOTTED => 11:10:04 AM

DIST	COUNTY	ROUTE	KILOMETER POST TOTAL PROJECT	SHEET No	TOTAL SHEETS
04	SF	80	13.2/13.9	232 S3C	1204

REGISTERED ELECTRICAL ENGINEER DATE

PLANS APPROVAL DATE

REGISTERED PROFESSIONAL ENGINEER No. Exp. ELECTRICAL STATE OF CALIFORNIA

PB POWER, Inc.
A Parsons Brinckerhoff Company
303 Second St., Suite 700N
San Francisco, CA 94107-1317

The State of California or its officers or agents shall not be responsible for the accuracy or completeness of electronic copies of this plan sheet.

To get to the web site, go to: http://www.dot.ca.gov

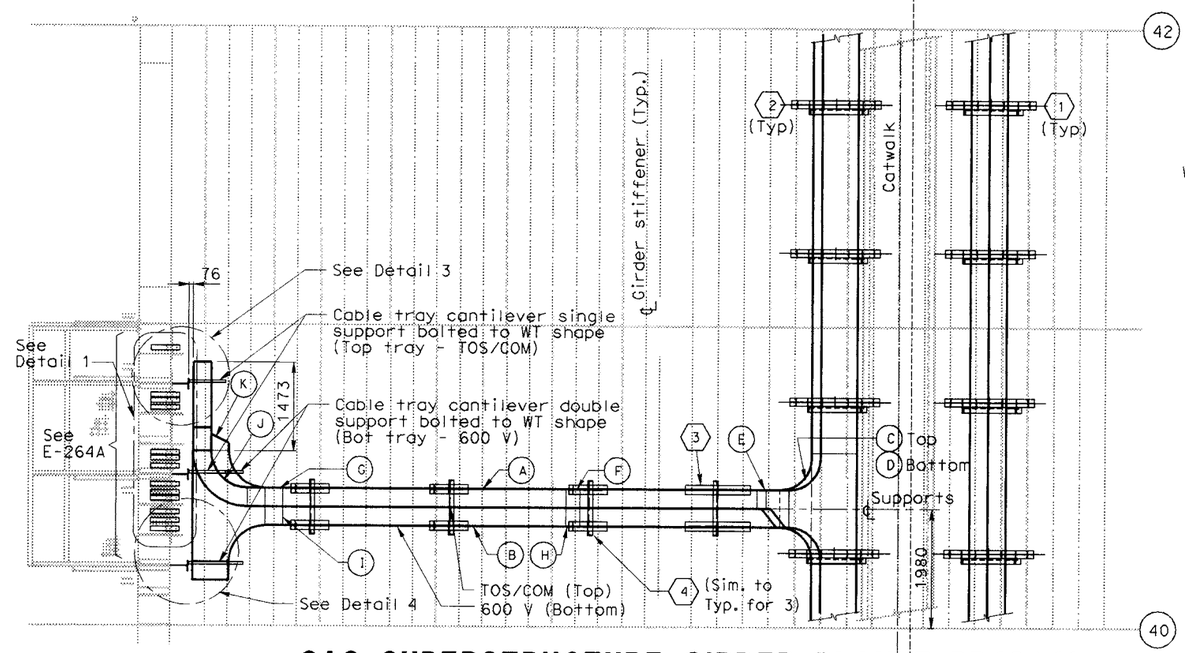

SAS SUPERSTRUCTURE GIRDER PLAN @ PP40/41

SCALE 1:50

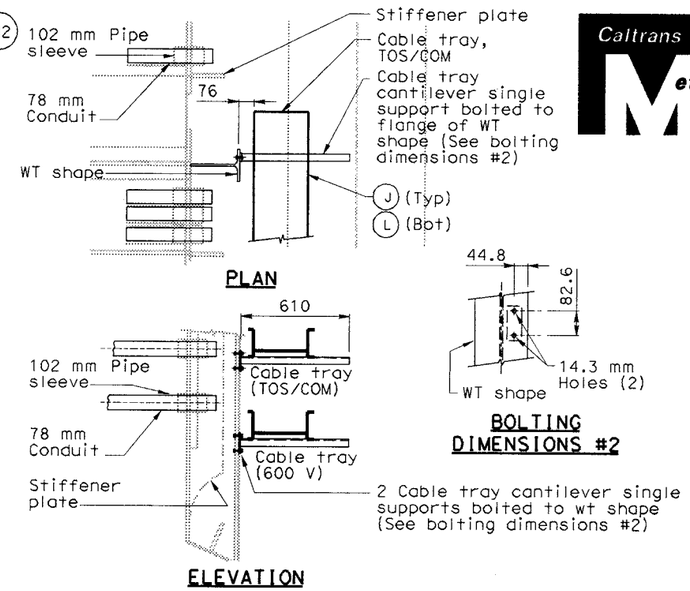

DETAIL 3

NO SCALE

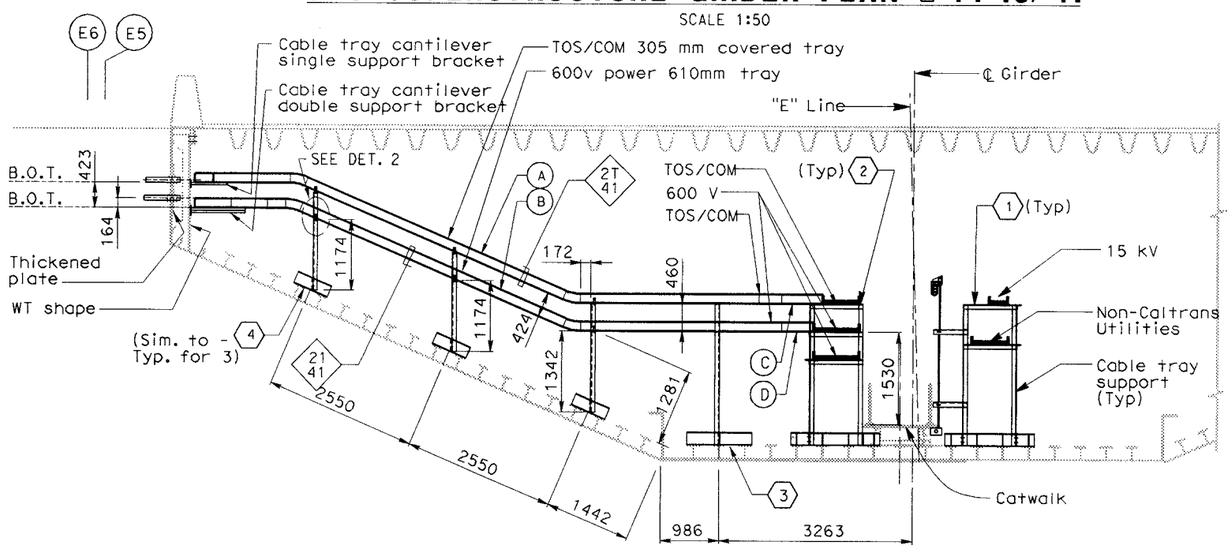

SAS SUPERSTRUCTURE GIRDER SECTION @ PP40/41

SCALE 1:50

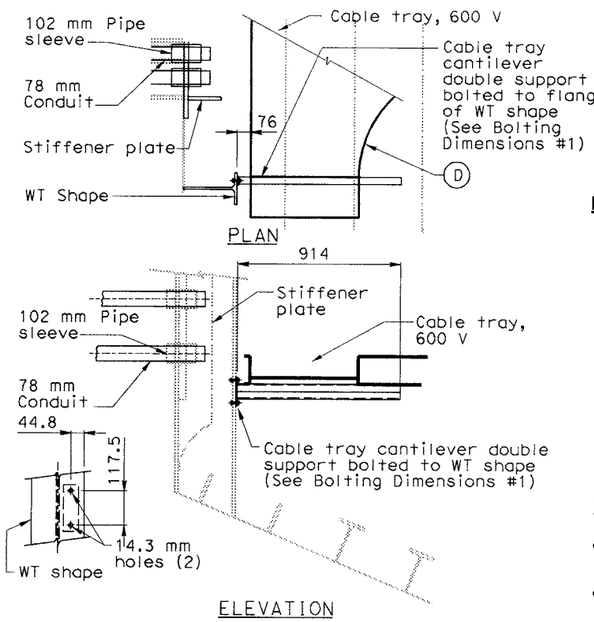

DETAIL 4

NO SCALE

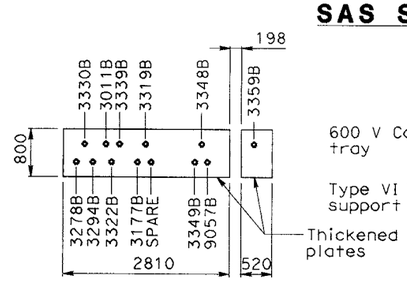

DETAIL 1

(FOR REFERENCE ONLY)
NO SCALE

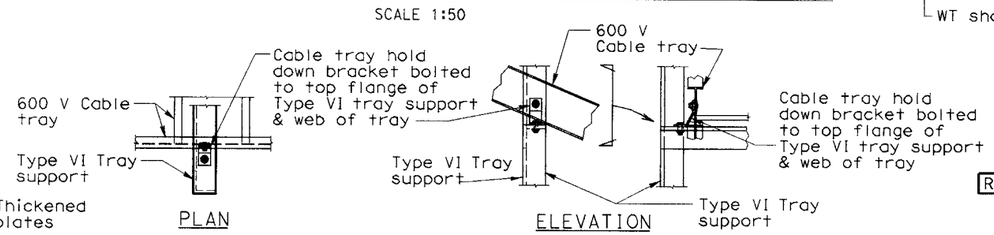

DETAIL 2

*Shown for 600 V tray. (TOS/COM tray support similar)
NO SCALE

CABLE TRAY COMPONENTS:

- (A) 305 mm Solid trough cable tray
- (B) 610 mm Ladder type cable tray
- (C) 610 mm x 610 mm Solid trough cable tray tee
- (D) 760 mm x 610 mm Ladder type cable tray reducing tee
- (E) 610 mm-to-305 mm Solid trough cable tray right reducer
- (F) 305 mm Solid trough cable tray 30° vertical inside bend
- (G) 305 mm Solid trough cable tray 30° vertical outside bend
- (H) 610 mm Ladder type cable tray 30° vertical inside bend
- (I) 610 mm Ladder type cable tray 30° vertical outside bend
- (J) 305 mm Solid trough cable tray 90° elbow
- (K) 610 mm-to-305 mm Ladder type cable tray left reducer
- (L) 305 mm Ladder type cable tray

NOTES:

1. Transverse support beam shall be located at 1250 mm from floorbeam.
2. For PB-2A support details, see AS-drawings.
3. For details not shown, see Girder Access Details No. 2 sheet.
4. For location of pipe sleeves at the utility platform crossbeams, see Typical Crossbeam Details sheets.
5. For details of pipe sleeves at all other crossbeams, see Utility Details sheets.

SHEET NOTE:

(1) For Type I cable tray support details, see AS-sheets.

(2) For Type II cable tray support details, see AS-sheets.

(3) For Type V cable tray support details, see AS-sheets.

(4) For Type VI cable tray support details, see AS-sheets.

RFI#857 R00

DETAILS
SAS SUPERSTRUCTURE GIRDER EASTBOUND TYPICAL TRAY AND CONDUIT INSTALLATION

SCALE AS SHOWN

E-207C

THIS PLAN ACCURATE FOR ELECTRICAL WORK ONLY.

ALL DIMENSIONS ARE IN MILLIMETERS UNLESS OTHERWISE SHOWN

FOR REDUCED PLANS ORIGINAL 0 20 40 60 80

DGN FILE =>t:\13103\ms\pse\sas struc\rfi\sas rfi 857\232s3c.dgn

DATE PLOTTED => 1/23/2008
TIME PLOTTED => 11:10:05 AM

LAST REVISION 00-00-00

STATE OF CALIFORNIA - DEPARTMENT OF TRANSPORTATION

Caltrans

DESIGN OVERSIGHT
BEHZAD GOLEMOHAMMADI

CALCULATED/DESIGNED BY
CHECKED BY

REVISED BY | DATE | DATE REVISED

DIST	COUNTY	ROUTE	KILOMETER POST TOTAL PROJECT	SHEET No	TOTAL SHEETS
04	SF	80	13.2/13.9	235C	1204

REGISTERED ELECTRICAL ENGINEER DATE

PLANS APPROVAL DATE

REGISTERED PROFESSIONAL ENGINEER NO. EXP. ELECTRICAL STATE OF CALIFORNIA

PB POWER, Inc.
A Parsons Brinckerhoff Company
303 Second St., Suite 700N
San Francisco, CA 94107-1317

The State of California or its officers or agents shall not be responsible for the accuracy or completeness of electronic copies of this plan sheet.

Caltrans now has a web site! To get to the web site, go to http://www.dot.ca.gov

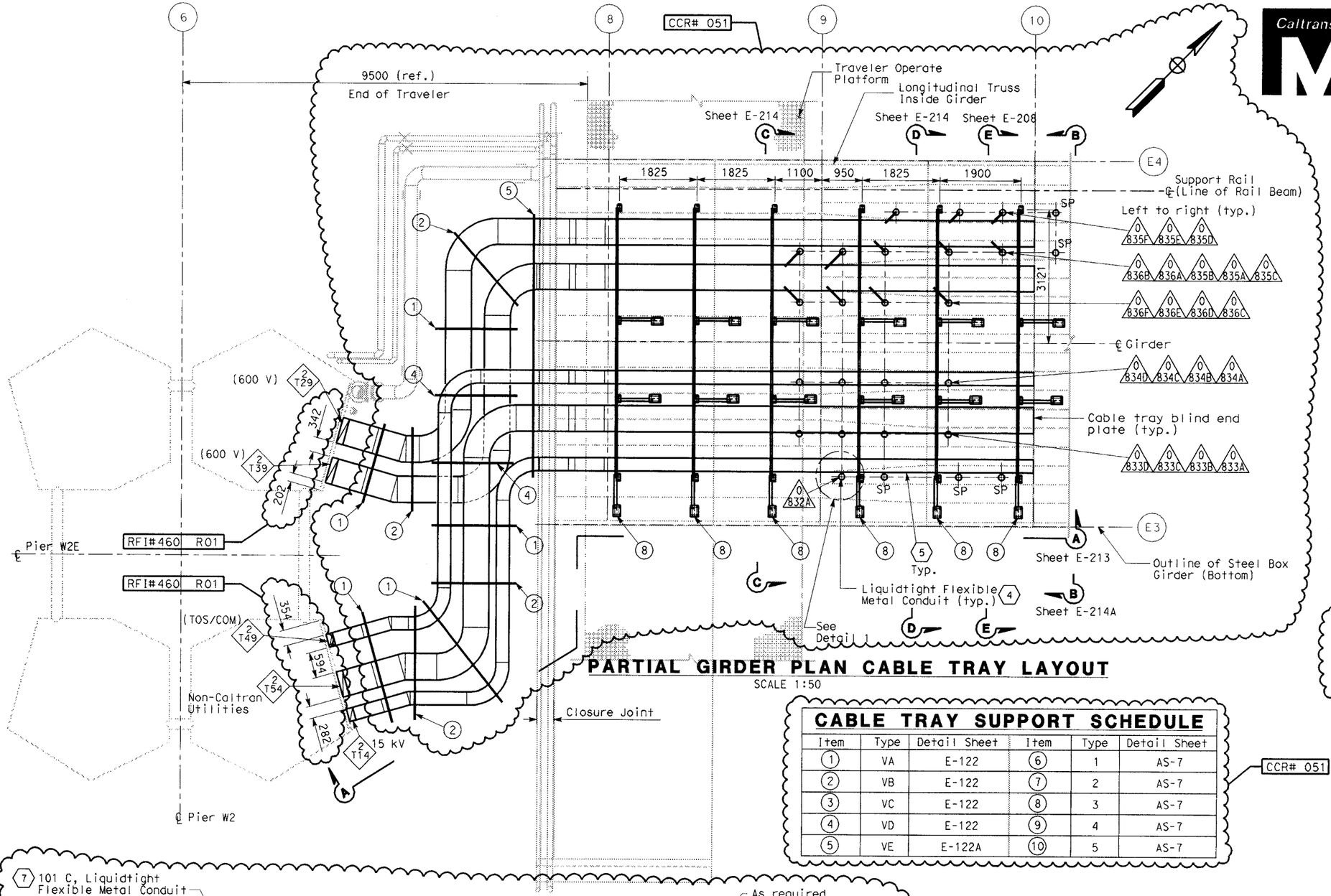

PARTIAL GIRDER PLAN CABLE TRAY LAYOUT

SCALE 1:50

CABLE TRAY SUPPORT SCHEDULE

Item	Type	Detail Sheet	Item	Type	Detail Sheet
1	VA	E-122	6	1	AS-7
2	VB	E-122	7	2	AS-7
3	VC	E-122	8	3	AS-7
4	VD	E-122	9	4	AS-7
5	VE	E-122A	10	5	AS-7

CCR# 051

SHEET NOTES:

1. For cable tray supports details, see Cable Tray Support Schedule table. CCR# 051
2. Cable trays shall be as specified per specification unless noted otherwise.
3. Cable and location of penetrations thru girder plate. See Utility Detail No. 1 and Utility Layout respectively of Superstructure and Tower Drawings. To prevent moisture from passing inside the sleeves, the Contractor shall install sealant after cables are pulled. Spare penetrations shall be plugged and capped.
4. For continuation of conduit to cable trays inside OBG see E-212A.
5. Cable trays shall be anchored to supports and shall have solid cover with heavy duty cover clamps.
6. Install neoprene rubber around cable tray cover opening for protection to liquidtight flexible metal conduits as it enter the cable tray. Seal opening as needed.
7. Liquidtight flexible metal conduits shall be anchored to supports or cable trays.
8. Contractor may adjust the location of cable tray supports below W2 Pier Cap Beam to suit field condition and provide additional seismic bracing as required.

CCR# 051

NOTES:

References:
1. - For circuit and conduit/cable tray schedules, see sheets starting at E-401.
   - For locations of cable tray support embeds, see AS sheets.
2. For other related work, not shown on this sheet, see Electrical Special Provisions.
3. For actual conduit locations, see girder level, cable tray and conduits plans. See sheets E-181 thru E-186.
4. 500 kcmil bare copper ground cable run along with tray at column to pier footing collar.
5. Ground bar detail see sheet E-208.

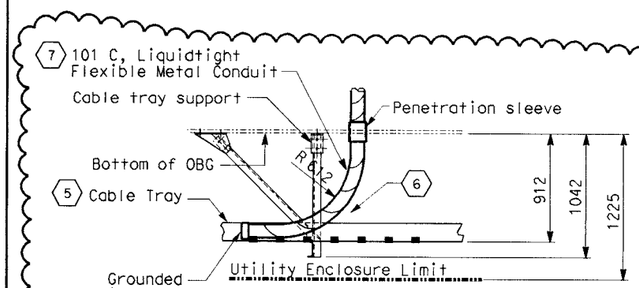

DETAIL 1

SCALE 1:50
CABLE TRAY TOP ENTRY

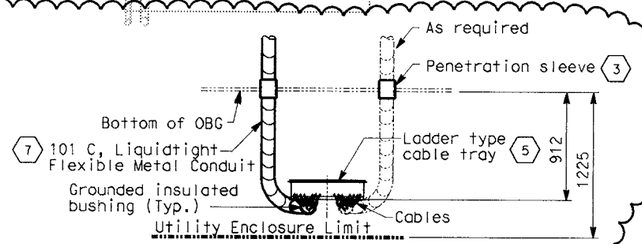

ALTERNATE

SCALE 1:50
CABLE TRAY BOTTOM ENTRY
(Cable tray supports not shown for clarity)

CCR# 051

DETAILS
SAS SUPERSTRUCTURE GIRDER EASTBOUND
TYPICAL CABLE TRAY AND CONDUIT INSTALLATION AT PIER W2E

SCALE AS NOTED

ALL DIMENSIONS ARE IN MILLIMETERS UNLESS OTHERWISE SHOWN.

FOR REDUCED PLANS ORIGINAL 0 20 40 60 80

DGN FILE =>t:\13103\ms\pse\sas struc\ccr\sas ccr 51\235.dgn

DATE PLOTTED => 1/23/2008
TIME PLOTTED => 11:10:06 AM

LAST REVISION 00-00-00

E-212

STATE OF CALIFORNIA - DEPARTMENT OF TRANSPORTATION

Caltrans

DESIGN OVERSIGHT
BEHZAD GOLEMOHAMMADI

CALCULATED/DESIGNED BY EDC
CHECKED BY CYF

DATE REVISED 08/02
REVISED BY 08/02

DIST	COUNTY	ROUTE	KILOMETER POST TOTAL PROJECT	SHEET No	TOTAL SHEETS
04	SF	80	13.2/13.9	235 S1C	1204

Caltrans Metric

REGISTERED ELECTRICAL ENGINEER DATE

PLANS APPROVAL DATE

REGISTERED PROFESSIONAL ENGINEER NO. EXP. STATE OF CALIFORNIA

PB POWER, Inc.
A Parsons Brinckerhoff Company
303 Second St., Suite 700N
San Francisco, CA 94107-1317

The State of California or its officers or agents shall not be responsible for the accuracy or completeness of electronic copies of this plan sheet.

Caltrans now has a web site! To get to the web site, go to http://www.dot.ca.gov

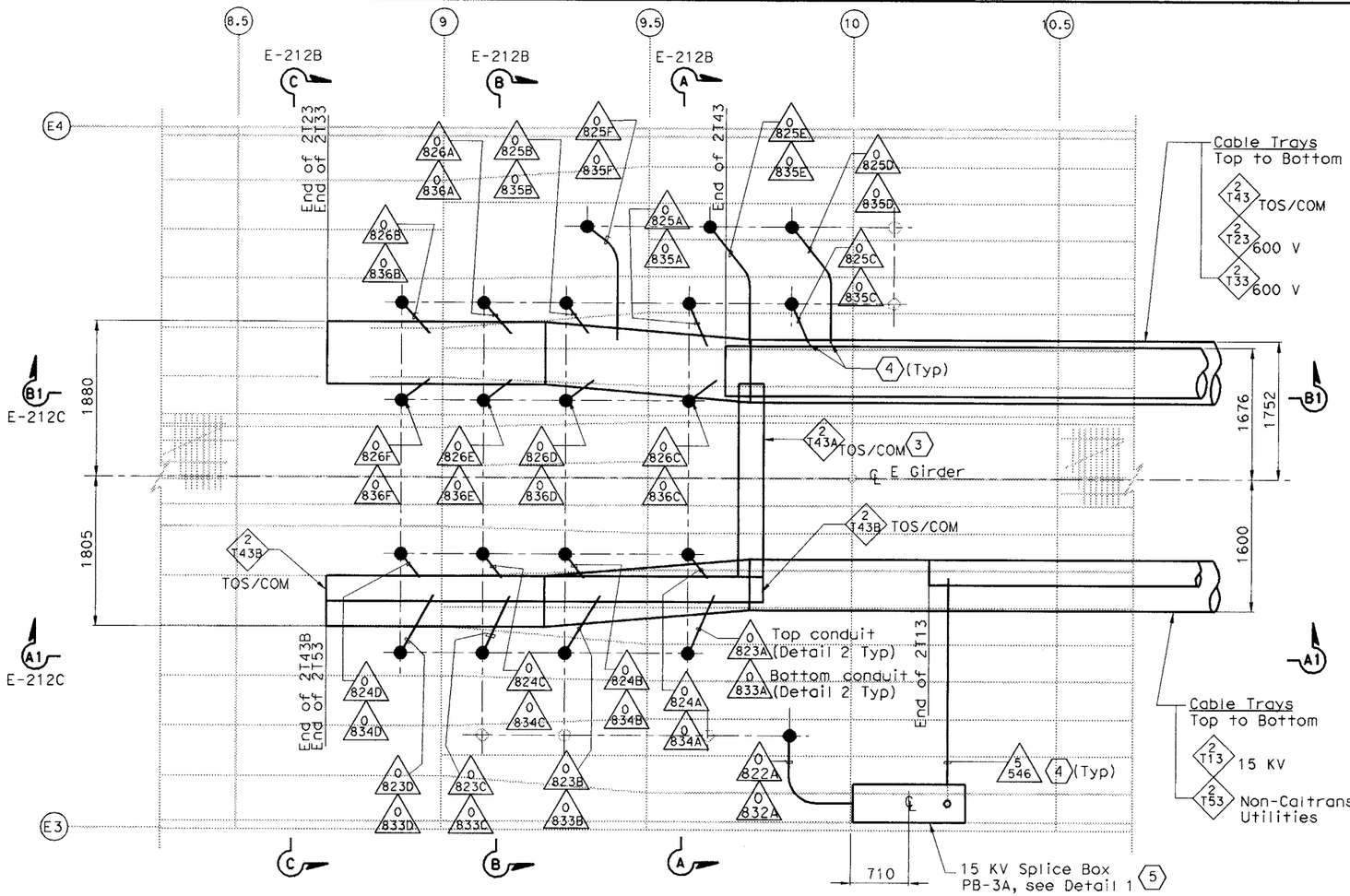

PARTIAL GIRDER-CABLE TRAY PLAN 6

SCALE 1:1.5x

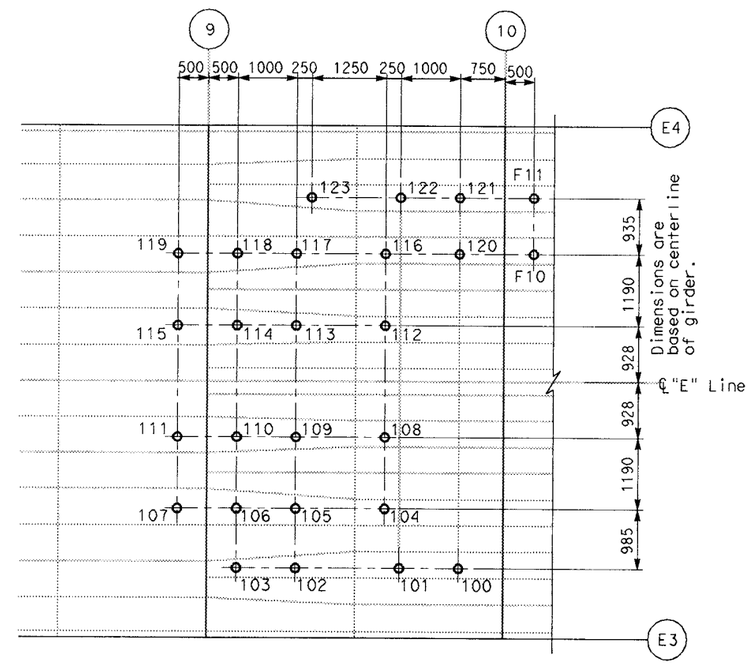

PIPE SLEEVE LOCATION-PLAN 6

SCALE 1:100

SHEET NOTES:

1. To prevent moisture from entering inside the conduit, Contractor to seal the end of conduit after cables are pulled. Conduit without cables inside shall be pluged and capped for future use.
2. Down to pull box, for details see sheet E-212A.
3. Provide drop out tray fitting.
4. Provide insulated ground bushing at end of conduit.
5. 15 KV splice box is bolted to longitudinal shear plate and installed by field.
6. See table A, sheet E-212B.

NOTES:

1. References:
   - For circuit and conduit/cable tray schedules, see sheets starting at E-401.
2. (SP) Denotes spare pipe sleeve for future 103 mm conduit. Contractor to provide plug at each end.
3. Cable tray fittings shall be 610 radius.

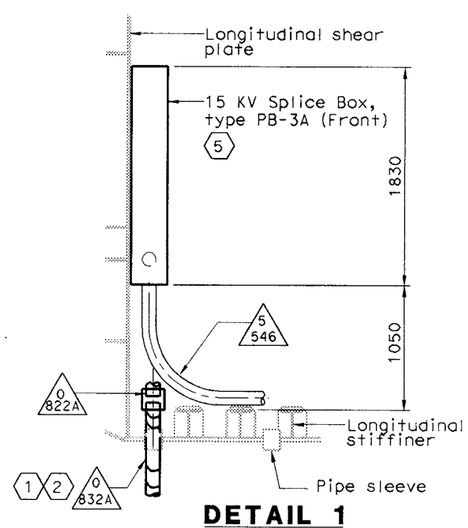

DETAIL 1

SCALE 1:50

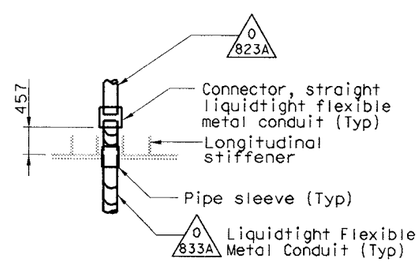

DETAIL 2

SCALE 1:50

RFI# 1038 R00
RFI# 793 R00

DETAILS
SAS SUPERSTRUCTURE GIRDER EASTBOUND CABLE TRAY AND CONDUIT AT PIER W2E

SCALE AS NOTED

E-212A

STATE OF CALIFORNIA - DEPARTMENT OF TRANSPORTATION
Caltrans

DESIGN OVERSIGHT: BEHZAD GOLEMOHAMMADI

CALCULATED/DESIGNED BY | CHECKED BY | DATE REVISED BY | DATE REVISED

LAST REVISION 00-00-00 | DATE PLOTTED => 1/23/2008 | TIME PLOTTED => 11:10:06 AM

ALL DIMENSIONS ARE IN MILLIMETERS UNLESS OTHERWISE SHOWN.

FOR REDUCED PLANS ORIGINAL 0 20 40 60 80

DGN FILE =>t:\13103\ms\pse\sas struc\rfi\sas rfi 793-completed as shts. see cco 42s1\235s1.dgn

CU 04251 | EA 0120F1

DIST	COUNTY	ROUTE	KILOMETER POST TOTAL PROJECT	SHEET No	TOTAL SHEETS
04	SF	80	13.2/13.9	239C	1204

REGISTERED ELECTRICAL ENGINEER DATE

PLANS APPROVAL DATE

REGISTERED PROFESSIONAL ENGINEER No. Exp. ELECTRICAL STATE OF CALIFORNIA

PB POWER, Inc.
A Parsons Brinckerhoff Company
303 Second St., Suite 700N
San Francisco, CA 94107-1317

The State of California or its officers or agents shall not be responsible for the accuracy or completeness of electronic copies of this plan sheet.

Caltrans now has a web site! To get to the web site, go to http://www.dot.ca.gov

Caltrans Metric

NOTE:

1. References:
   - For SAS Superstructure Girder Eastbound plan, see sheet E-186.
   - For SAS Superstructure Girder Eastbound typical section, see sheet E-207.

SHEET NOTES:

(1) For utility opening detail, see structural sheets.

(2) For Type I cable tray support structure, see AS-sheets.

(3) For Type VIII cable tray support structure, see AS-sheets.

(4) For Type IX cable tray support structure, see AS-sheets.

(5) For Type II Cable Tray Support Structure, see AS-sheets. (Omit bottom rung).

(6) For Type X Cable Tray Support Structure, see AS-sheets.

(7) Type I Cable Tray Support Structure modified. (Omit stanchion mounted lighting supports). For details, see AS-sheets.

(8) Type II Cable Tray Support Structure modified. (Omit bottom rung). For details, see AS-sheets.

(9) Type VIII support with the exception of angle steel bracket oriented as shown on Detail 1. For Details, see AS-sheets.

(10) For Type XI cable tray support structure, see AS-sheets.

(11) For cable tray support see drawing AS-16Q.

RFI#919 R01
RFI#845 R00

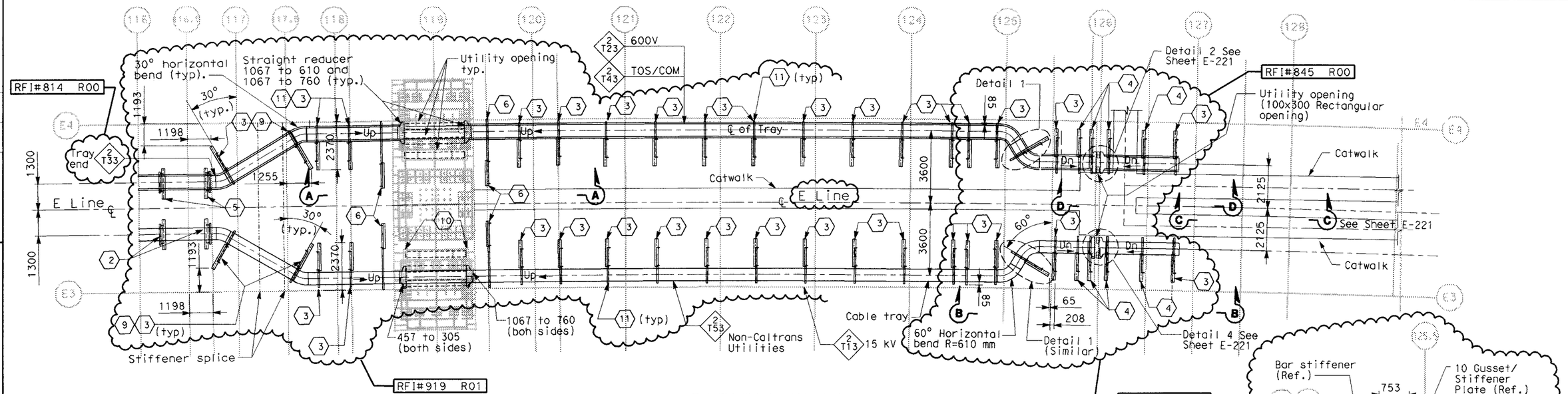

PARTIAL PLAN

SCALE 1:100

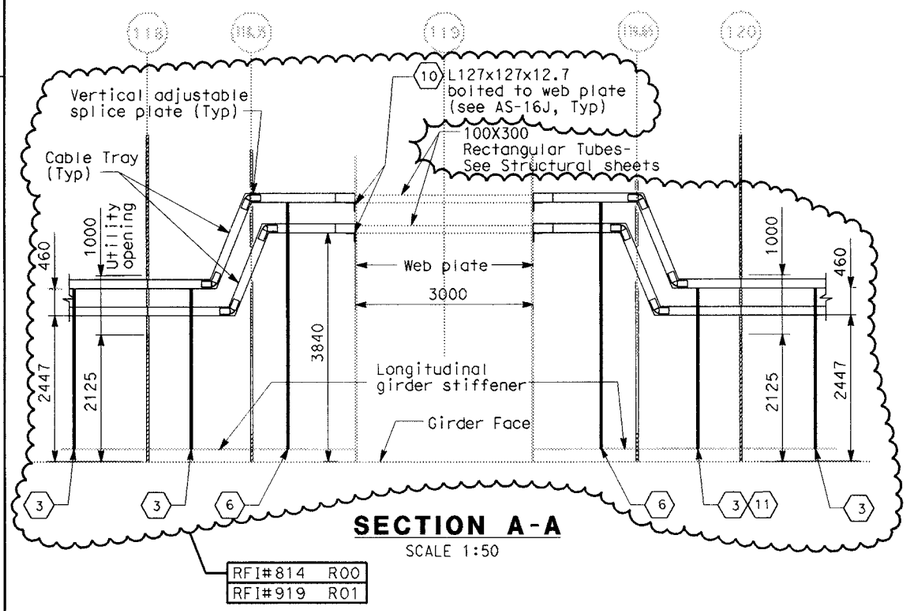

SECTION A-A

SCALE 1:50

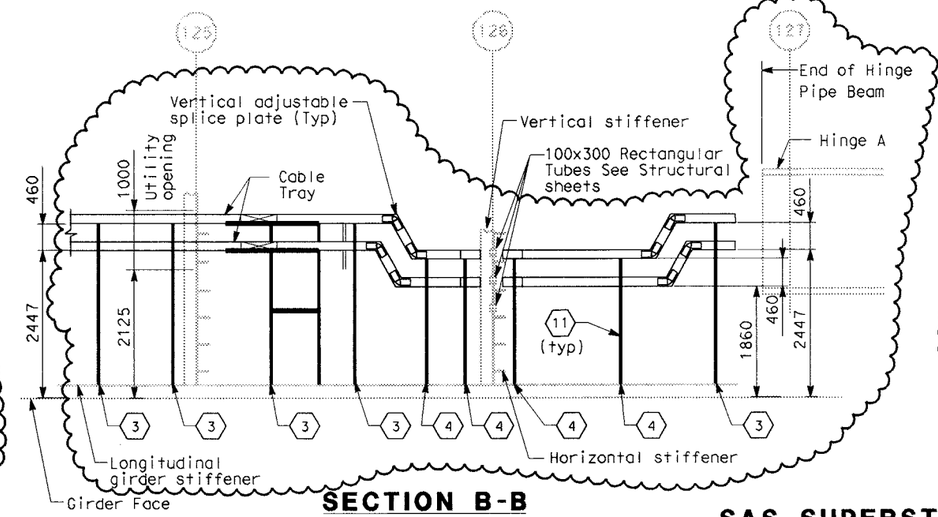

SECTION B-B

SCALE 1:50

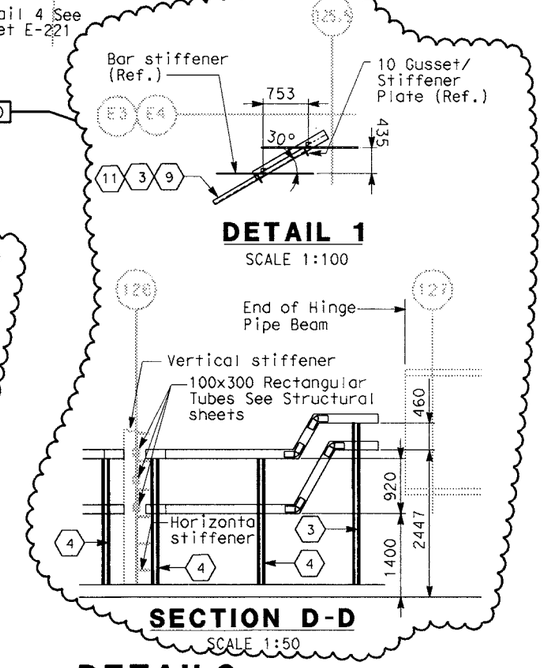

DETAIL 1

SCALE 1:100

SECTION D-D

SCALE 1:50

DETAILS
SAS SUPERSTRUCTURE GIRDER EASTBOUND HINGE AE

SCALE AS NOTED

E-220

THIS PLAN ACCURATE FOR ELECTRICAL WORK ONLY.

ALL DIMENSIONS ARE IN MILLIMETERS UNLESS OTHERWISE SHOWN

	DATE	REVISED BY	DATE	REVISED BY	IAH
CALCULATED/ DESIGNED BY	EDC	08/02	CYF	08/02	3/04
CHECKED BY					

DESIGN OVERSIGHT
BEHZAD GOLEMOHAMMADI

STATE OF CALIFORNIA - DEPARTMENT OF TRANSPORTATION
Caltrans

LAST REVISION 00-00-00

DATE PLOTTED => 1/23/2008
TIME PLOTTED => 11:10:09 AM

FOR REDUCED PLANS ORIGINAL 0 20 40 60 80

DGN FILE =>t:\13103\ms\pse\sas struc\rfi\sas crfi 003\239r01.dgn