DIST.	COUNTY	ROUTE	KILOMETER POST TOTAL PROJECT	SHEET NO.	TOTAL SHEETS
04	SF	80	13.2/13.9	452R1	1204

REGISTERED ENGINEER - CIVIL

12-6-04
PLANS APPROVAL DATE

REGISTERED PROFESSIONAL ENGINEER John A. Denis No. C 26169 Exp. 03/31/06 CIVIL STATE OF CALIFORNIA

The State of California or its officers or agents shall not be responsible for the accuracy or completeness of electronic copies of this plan sheet.

T.Y. LIN / MOFFATT & NICHOL
825 BATTERY STREET
SAN FRANCISCO, CA 94111

Caltrans now has a web site! To get to the web site, go to: http://www.dot.ca.gov

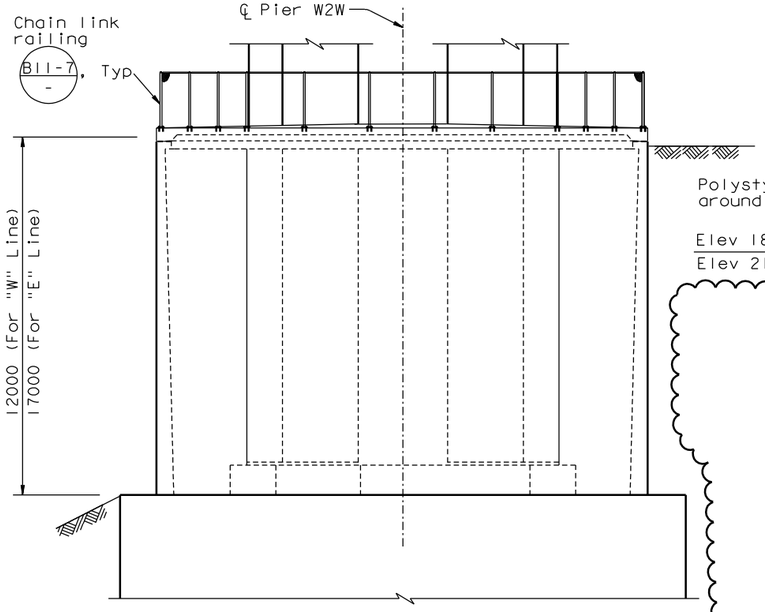

ELEVATION E-E
(Pier W2W shown, Pier W2E similar)
1:100

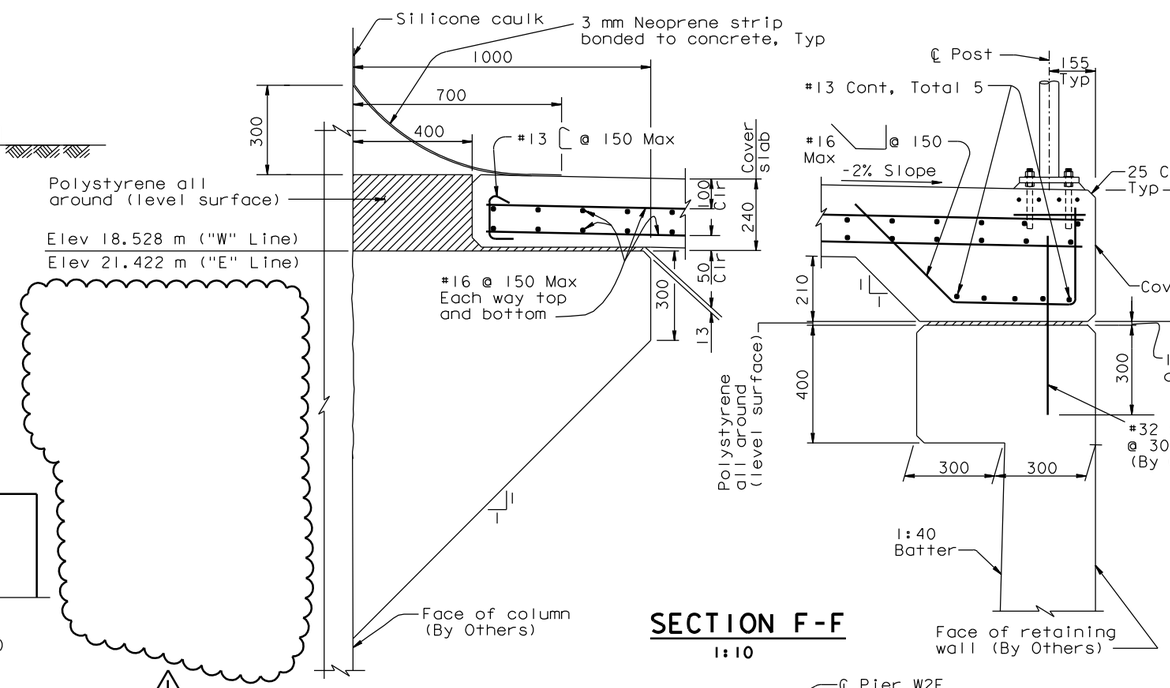

SECTION F-F
1:10

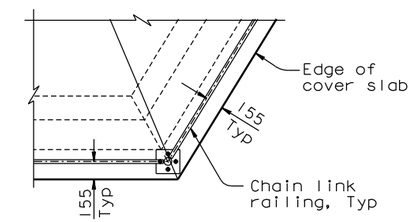

DETAIL A
1:25

REGISTERED PROFESSIONAL ENGINEER Tien Hung Ho No. C 43990 Exp. 06/30/09 CIVIL STATE OF CALIFORNIA

FOR REVISIONS ONLY

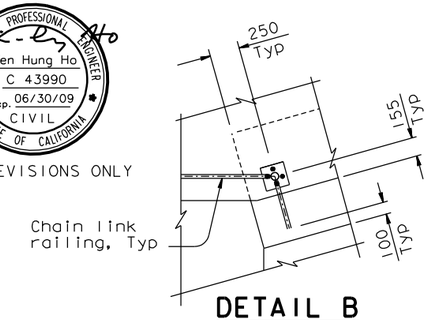

DETAIL B
1:25

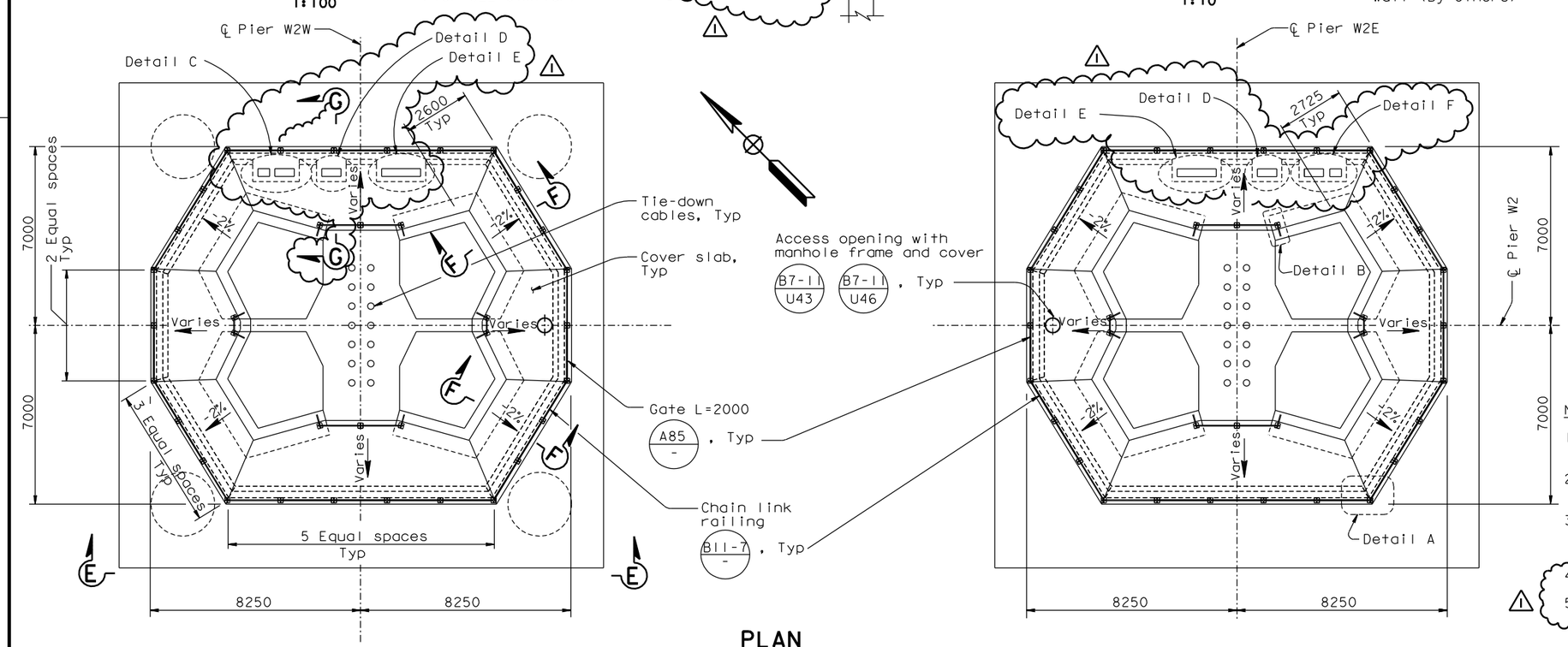

PLAN
1:100

MARK	DATE	DESCRIPTIONS	BY	CH'D	CCO#
1	01/09/08	CABLE TRAY CHANGES	TH	JD	42S1

REVISIONS

CONTRACT CHANGE ORDER NO. ____
SHEET ___ OF ___

NOTES:

1. For pier W2 access details, see "Pier W2 Access Details" sheet.
2. For utility cable trays, location of openings and embed strut channel, see "Road Plans".
3. Fill gap between cable tray and concrete with polystyrene, caulk all around, covered with 3 mm Neoprene strip (similar to that shown in Section F-F).
4. For Section G-G see "Pier W2 Details No.6A" sheet.
5. For Details C, D, E and F, see "Pier W2 Details No.6A" sheet.

ALL DIMENSIONS ARE IN MILLIMETERS UNLESS OTHERWISE SHOWN

R. Valizadeh/V. Toan/Y.L./W.L./F.C.
DESIGN OVERSIGHT
SIGN OFF DATE 01/09/08

Rev. Date: 5-18-98

	BY	CHECKED
DESIGN	J. Denis	J. Leventini
DETAILS	K. Tam	J. Leventini
QUANTITIES	J. Denis	D. Harrison

PREPARED FOR THE STATE OF CALIFORNIA DEPARTMENT OF TRANSPORTATION

R. Manzanarez
PROJECT ENGINEER

BRIDGE NO. 34-0006L/R
KILOMETER POST 13.2/13.9

SAN FRANCISCO OAKLAND BAY BRIDGE
EAST SPAN SEISMIC SAFETY PROJECT
SELF-ANCHORED SUSPENSION BRIDGE
(SUPERSTRUCTURE & TOWER)

PIER W2 DETAILS NO. 6

ORIGINAL SCALE IN MILLIMETERS FOR REDUCED PLANS 0 10 20 30 40 50 60 70 80 90 100

CU 04
EA 0120F1

DISREGARD PRINTS BEARING EARLIER REVISION DATES

REVISION DATES (PRELIMINARY STAGE ONLY) 05/18/99 08/02/99 05/31/01 04/08/02 07/01/02 08/07/02 12/14/02 05/18/03 10/12/04

SHEET 35R1 OF

FILE => I:\bb\04-01200I\sas\contract plans and cco\cco\in progress\cco#42s1\dgn\aepir04-r1.dgn

100% PS&E

DATE PLOTTED => 09 JAN 2008 TIME PLOTTED => 14:27:07

USERNAME => ptom