DIST.	COUNTY	ROUTE	KILOMETER POST TOTAL PROJECT	SHEET NO.	TOTAL SHEETS
04	SF	80	13.2/13.9	452R1	1204

REGISTERED ENGINEER - CIVIL

12-6-04
PLANS APPROVAL DATE

REGISTERED PROFESSIONAL ENGINEER John A. Denis No. C 26169 Exp. 03/31/08 CIVIL STATE OF CALIFORNIA

The State of California or its officers or agents shall not be responsible for the accuracy or completeness of electronic copies of this plan sheet.

T.Y. LIN / MOFFATT & NICHOL
825 BATTERY STREET
SAN FRANCISCO, CA 94111

Caltrans now has a web site! To get to the web site, go to: http://www.dot.ca.gov

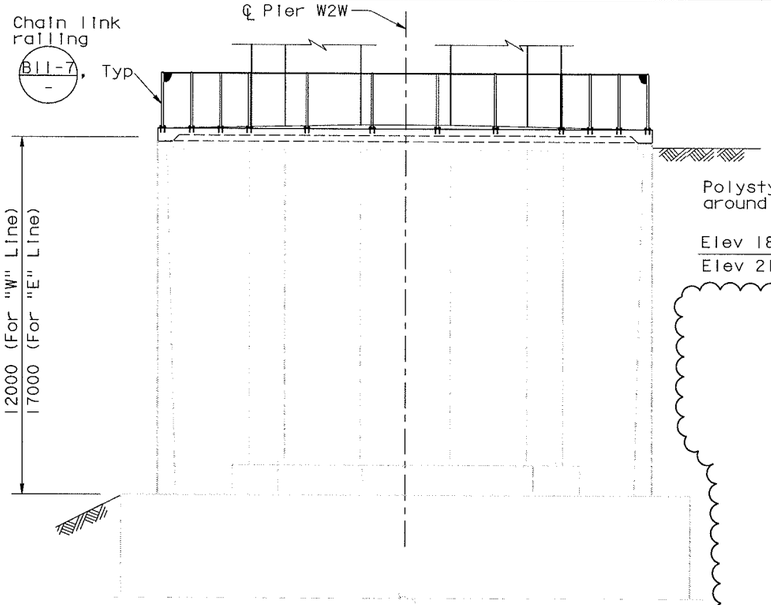

ELEVATION E-E (Pier W2W shown, Pier W2E similar)
1:100

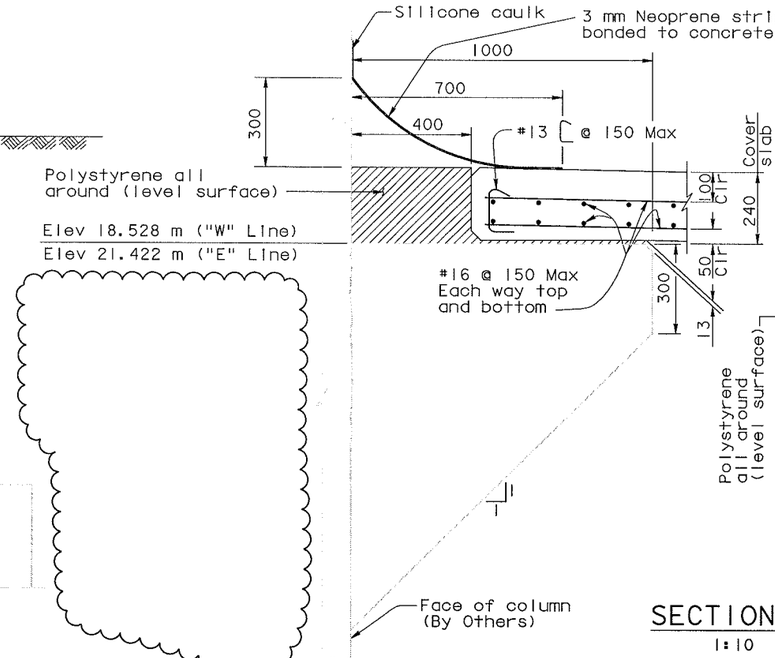

SECTION F-F
1:10

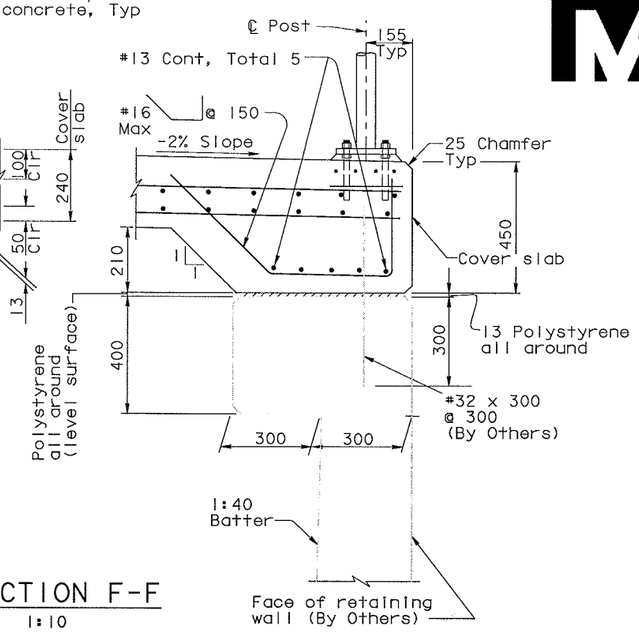

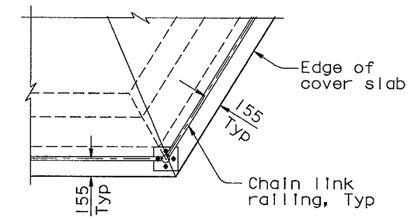

DETAIL A
1:25

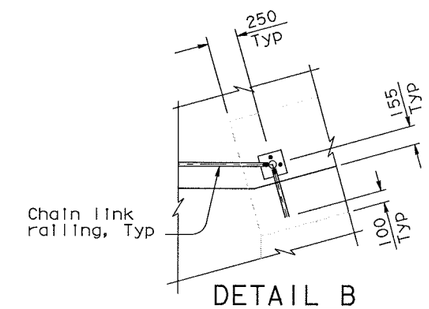

DETAIL B
1:25

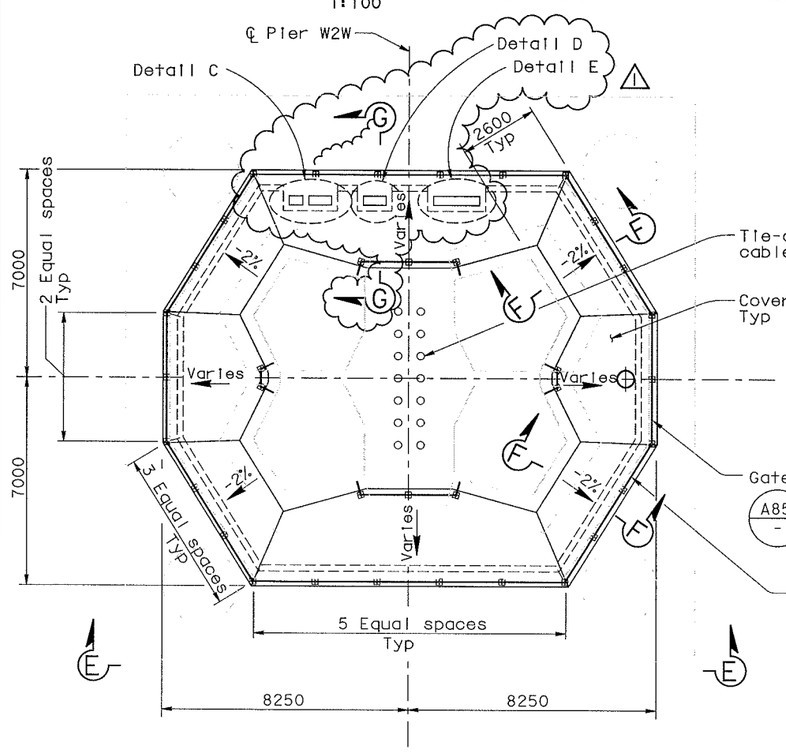

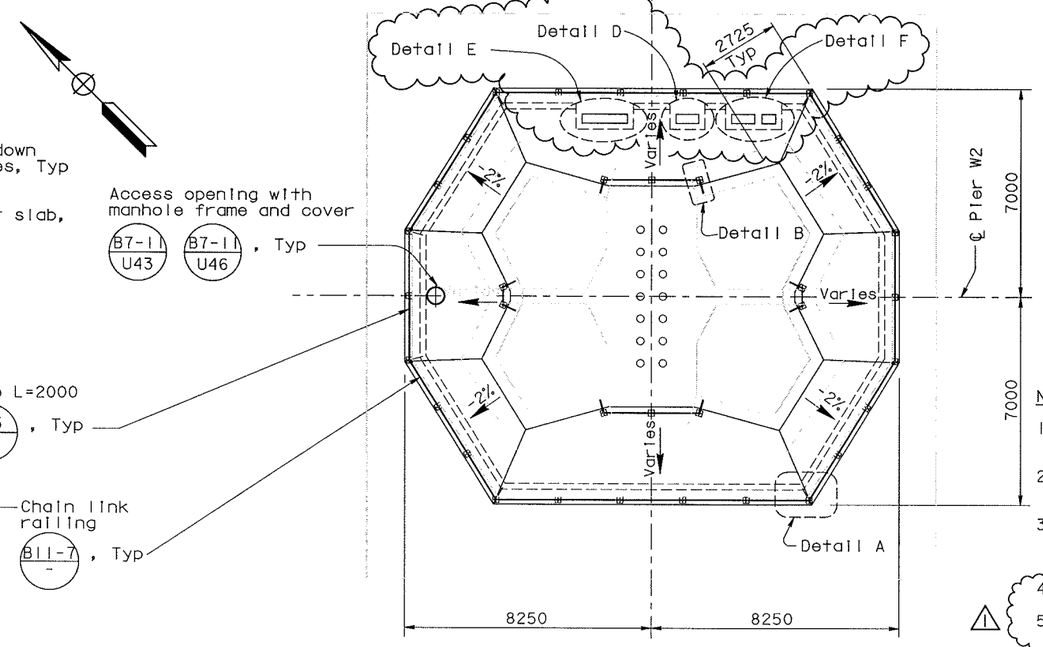

PLAN
1:100

MARK	DATE	DESCRIPTIONS	BY	CH'D	CCO#
1	11/16/07	CABLE TRAY CHANGES	JD	TH	42S1

REVISIONS

CONTRACT CHANGE ORDER NO. _____
SHEET ____ OF ____

NOTES:

1. For pier W2 access details, see "Pier W2 Access Details" sheet.
2. For utility cable trays, location of openings and embed strut channel, see "Road Plans".
3. Fill gap between cable tray and concrete with polystyrene, caulk all around, covered with 3 mm Neoprene strip (similar to that shown in Section F-F).
4. For Section G-G see "Pier W2 Details No.6A" sheet.
5. For Details C, D, E and F, see "Pier W2 Details No.6A" sheet.

ALL DIMENSIONS ARE IN MILLIMETERS UNLESS OTHERWISE SHOWN

R. Vallizadeh/V.Toan/Y.L./W.L./F.C.
DESIGN OVERSIGHT
Raya Vallizadeh / Vong Toan / Y. Liu
SIGN OFF DATE 11/16/07

	BY	CHECKED
DESIGN	J. Denis	J. Leventini
DETAILS	K. Tam	J. Leventini
QUANTITIES	J. Denis	D. Harrison

PREPARED FOR THE STATE OF CALIFORNIA DEPARTMENT OF TRANSPORTATION

R. Manzanarez
PROJECT ENGINEER

BRIDGE NO. 34-0006L/R
KILOMETER POST 13.2/13.9

SAN FRANCISCO OAKLAND BAY BRIDGE
EAST SPAN SEISMIC SAFETY PROJECT
SELF-ANCHORED SUSPENSION BRIDGE
(SUPERSTRUCTURE & TOWER)
PIER W2 DETAILS NO. 6

Rev. Date: 5-18-98

ORIGINAL SCALE IN MILLIMETERS FOR REDUCED PLANS 0 10 20 30 40 50 60 70 80 90 100

CU 04
EA 0120F1

DISREGARD PRINTS BEARING EARLIER REVISION DATES

REVISION DATES (PRELIMINARY STAGE ONLY): 05/18/99 08/02/99 05/31/01 04/08/02 07/31/02 08/07/02 12/19/02 05/18/03 10/12/04

SHEET 35R1 OF

FILE => I:\bb\04-01200I\sas\contract plans and cco\cco\in progress\cco#42s1\dgn\aeplr04-r1.dgn

USERNAME => dwinrow DATE PLOTTED => 16 NOV 2007 TIME PLOTTED => 14:05:16

100% PS&E

DIST.	COUNTY	ROUTE	KILOMETER POST TOTAL PROJECT	SHEET NO.	TOTAL SHEETS
04	SF	80	13.2/13.9	452SI	1204

Caltrans Metric

REGISTERED ENGINEER - CIVIL

04-04-07
PLANS APPROVAL DATE

REGISTERED PROFESSIONAL ENGINEER John A. Denis No. C 26169 Exp. 03/31/08 CIVIL STATE OF CALIFORNIA

The State of California or its officers or agents shall not be responsible for the accuracy or completeness of electronic copies of this plan sheet.

T.Y. LIN / MOFFATT & NICHOL
825 BATTERY STREET
SAN FRANCISCO, CA 94111

Caltrans now has a web site! To get to the web site, go to: http://www.dot.ca.gov

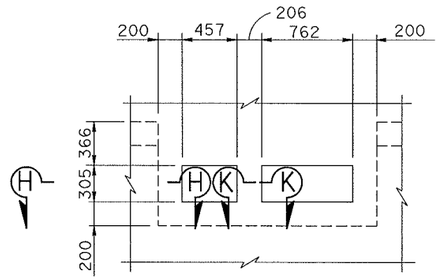

DETAIL C
1:25

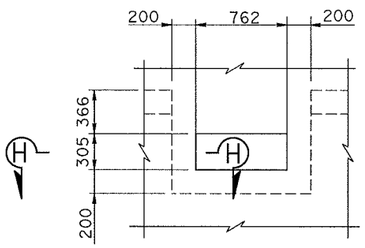

DETAIL D
1:25

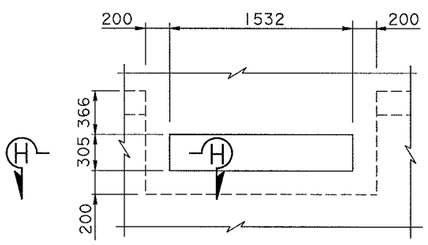

DETAIL E
1:25

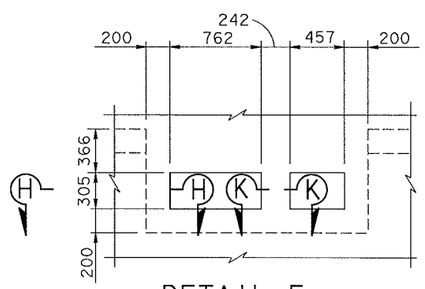

DETAIL F
1:25

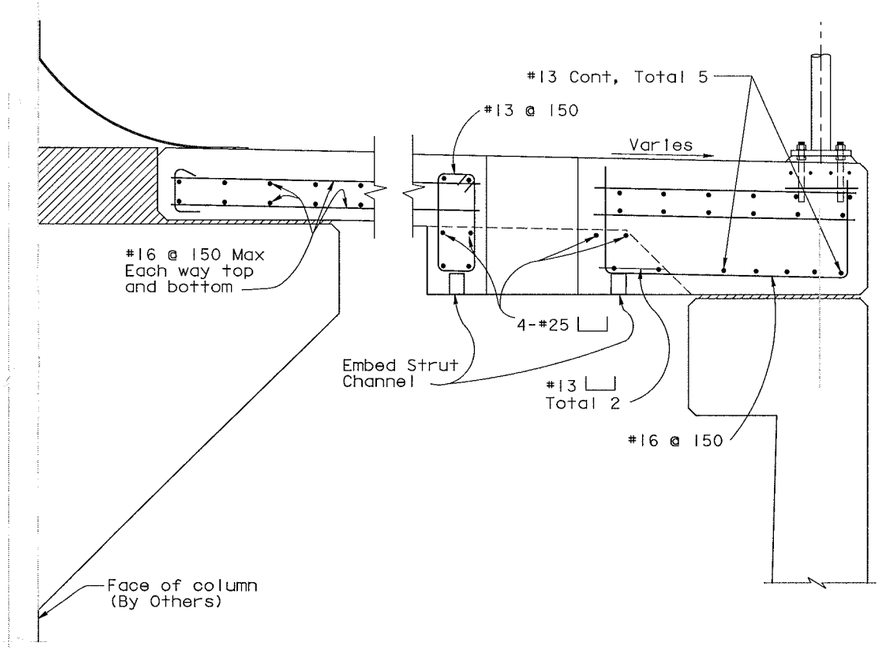

SECTION G-G
1:10

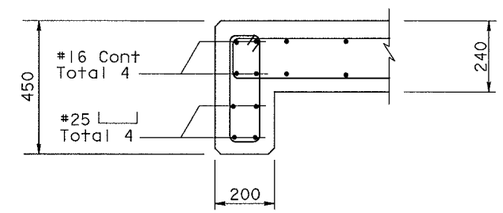

SECTION H-H
1:10

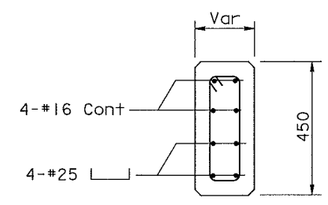

SECTION K-K
1:10

NOTES:

1. For utility cable trays, location of openings and embed strut channel, see "Road Plans".

MARK	DATE	DESCRIPTIONS	BY	CH'D	CCO#
0	11/16/07	CABLE TRAY CHANGES	JD	TH	42SI

REVISIONS

CONTRACT CHANGE ORDER NO. _____
SHEET ____ OF ____

ALL DIMENSIONS ARE IN MILLIMETERS UNLESS OTHERWISE SHOWN

R. Vallzadeh/V. Toan/Y.L./W.L./F.C.
DESIGN OVERSIGHT
SIGN OFF DATE 11/16/07

	BY	CHECKED
DESIGN	J. Denis	T. Ho
DETAILS	J. Denis	H. Tazir
QUANTITIES	J. Denis	T. Ho

PREPARED FOR THE STATE OF CALIFORNIA DEPARTMENT OF TRANSPORTATION

R. Manzanarez
PROJECT ENGINEER

BRIDGE NO. 34-0006L/R
KILOMETER POST 13.2/13.9

SAN FRANCISCO OAKLAND BAY BRIDGE
EAST SPAN SEISMIC SAFETY PROJECT
SELF-ANCHORED SUSPENSION BRIDGE
(SUPERSTRUCTURE & TOWER)

PIER W2 DETAILS NO. 6A

Rev. Date: 5-18-98

ORIGINAL SCALE IN MILLIMETERS FOR REDUCED PLANS 0 10 20 30 40 50 60 70 80 90 100

CU 04
EA 0120F1

DISREGARD PRINTS BEARING EARLIER REVISION DATES 04/04/07

REVISION DATES (PRELIMINARY STAGE ONLY)

SHEET 35SI OF

FILE => I:\bb\04-012001\sas\contract plans and cco\cco\in progress\cco#42si\dgn\aeplr04si.dgn

100 % PS&E

USERNAME => dwinrow DATE PLOTTED => 16 NOV 2007 TIME PLOTTED => 14:06:37

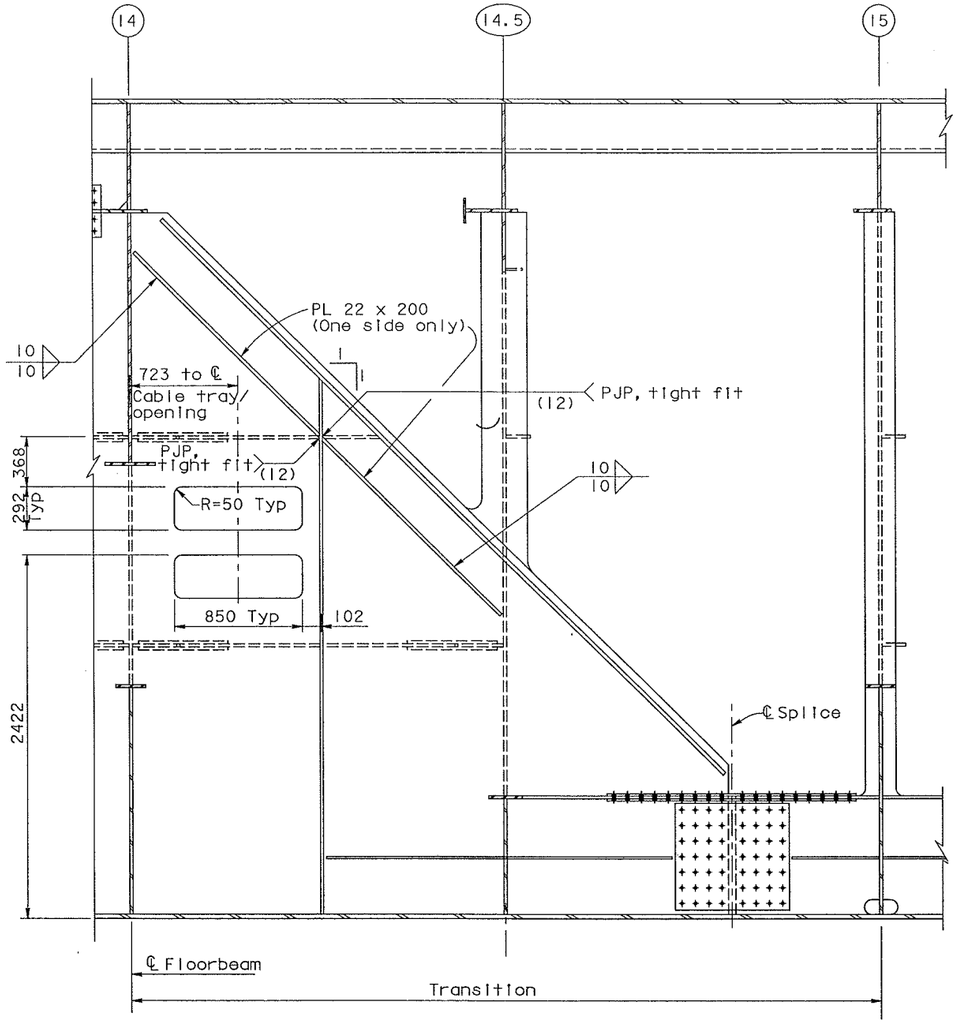

LONGITUDINAL SHEAR PLATE ELEVATION (PP14 to PP15)

1:20

(See Note 1)

DIST.	COUNTY	ROUTE	KILOMETER POST TOTAL PROJECT	SHEET NO.	TOTAL SHEETS
04	SF	80	13.2/13.9	631S1	1204

Caltrans Metric

Daniel J. Turner
REGISTERED ENGINEER - CIVIL

08-31-07
PLANS APPROVAL DATE

REGISTERED PROFESSIONAL ENGINEER
Daniel J. Turner
No. C 65033
Exp. 06/30/09
CIVIL
STATE OF CALIFORNIA

The State of California or its officers or agents shall not be responsible for the accuracy or completeness of electronic copies of this plan sheet.

T.Y. LIN / MOFFATT & NICHOL
825 BATTERY STREET
SAN FRANCISCO, CA 94111

Caltrans now has a web site! To get to the web site, go to: http://www.dot.ca.gov

MARK	DATE	DESCRIPTIONS	BY	CH'D	CCO#
0	11/16/07	CABLE TRAY CHANGES	DT	GB	42S1

REVISIONS

CONTRACT CHANGE ORDER NO. _____
SHEET ____ OF ____

NOTES:

1. For Details not shown, see "Typical Girder Details No. 7" sheet.

100 % PS&E

ALL DIMENSIONS ARE IN MILLIMETERS UNLESS OTHERWISE SHOWN

SAN FRANCISCO OAKLAND BAY BRIDGE
EAST SPAN SEISMIC SAFETY PROJECT
SELF-ANCHORED SUSPENSION BRIDGE
(SUPERSTRUCTURE & TOWER)

TYPICAL GIRDER DETAILS NO. 7A

R. Valizadeh/V. Toan/Y.L./W.L./F.C.
DESIGN OVERSIGHT
SIGN OFF DATE 11/16/07

	BY	CHECKED
DESIGN	G. Baker	D. Turner
DETAILS	G. Baker	D. Turner
QUANTITIES	G. Baker	D. Turner

PREPARED FOR THE STATE OF CALIFORNIA DEPARTMENT OF TRANSPORTATION

R. Manzanarez
PROJECT ENGINEER

BRIDGE NO. 34-0006L/R
KILOMETER POST 13.2/13.9

Rev. Date: 5-18-98

ORIGINAL SCALE IN MILLIMETERS FOR REDUCED PLANS 0 10 20 30 40 50 60 70 80 90 100

CU 04
EA 0120F1

DISREGARD PRINTS BEARING EARLIER REVISION DATES 08/31/07

REVISION DATES (PRELIMINARY STAGE ONLY)

SHEET 214S1 OF

FILE => I:\bb\04-012001\sas\contract plans and cco\cco\in progress\cco#42s1\dgn\agdkd04a.dgn

USERNAME => kio DATE PLOTTED => 16 NOV 2007 TIME PLOTTED => 14:20:43

MARK	DATE	DESCRIPTIONS	BY	CH'D	CCO#
1	11/16/07	CABLE TRAY CHANGES	GB	DT	42S1

REVISIONS

CONTRACT CHANGE ORDER NO. ____
SHEET ____ OF ____

Daniel J. Turner
REGISTERED PROFESSIONAL ENGINEER
Daniel J. Turner
No. C 65033
Exp. 06/30/09
CIVIL
STATE OF CALIFORNIA
FOR REVISIONS ONLY

DIST.	COUNTY	ROUTE	KILOMETER POST TOTAL PROJECT	SHEET NO.	TOTAL SHEETS
04	SF	80	13.2/13.9	706R1	1204

Caltrans Metric

George Baker
REGISTERED ENGINEER - CIVIL
12-6-04
PLANS APPROVAL DATE

REGISTERED PROFESSIONAL ENGINEER
George S. Baker
No. C 57112
Exp. 12/31/05
CIVIL
STATE OF CALIFORNIA

The State of California or its officers or agents shall not be responsible for the accuracy or completeness of electronic copies of this plan sheet.

T.Y. LIN / MOFFATT & NICHOL
825 BATTERY STREET
SAN FRANCISCO, CA 94111

Caltrans now has a web site! To get to the web site, go to: http://www.dot.ca.gov

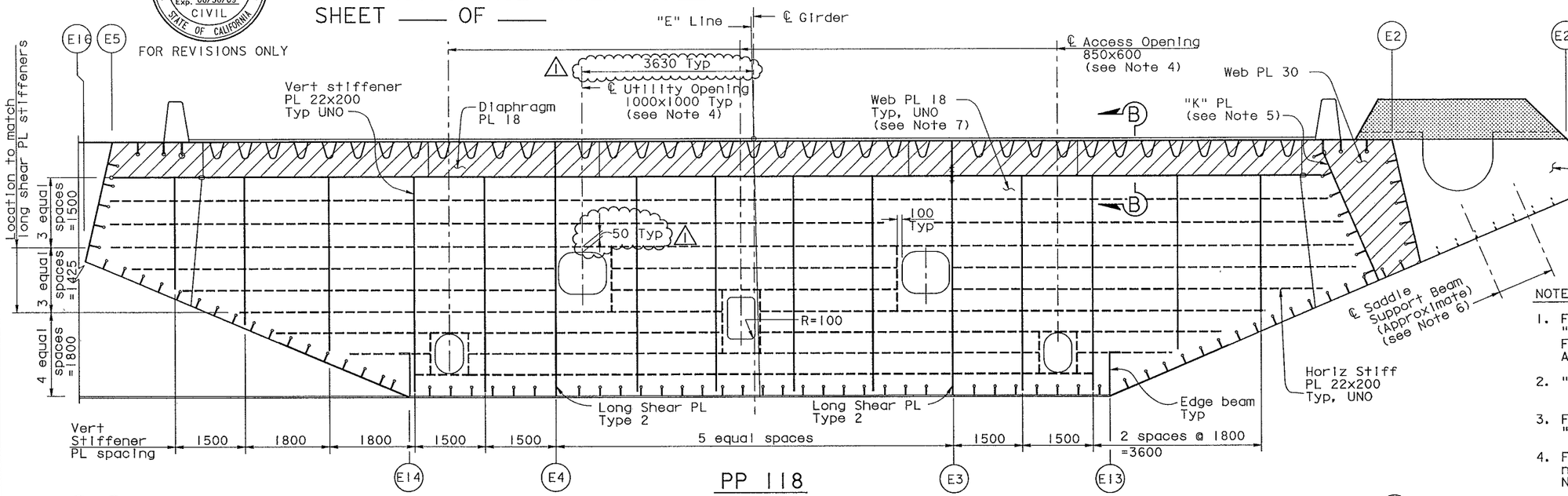

PP 118

NOTES:

1. For floorbeam details not shown, see "Typical Floorbeam Details No.1" sheet. For dimensions not shown, see "Girder At East Transition" sheets.
2. "E" Line girder is shown, "W" Line girder is similar.
3. For saddle housing details, see "East Saddle Housing Details" sheets.
4. For details of access and utility opening not shown, see "Typical Girder Details No.7" sheet, similar.
5. For "K" plate and vertical plate details, see "Girder At East Transition Details" sheets.

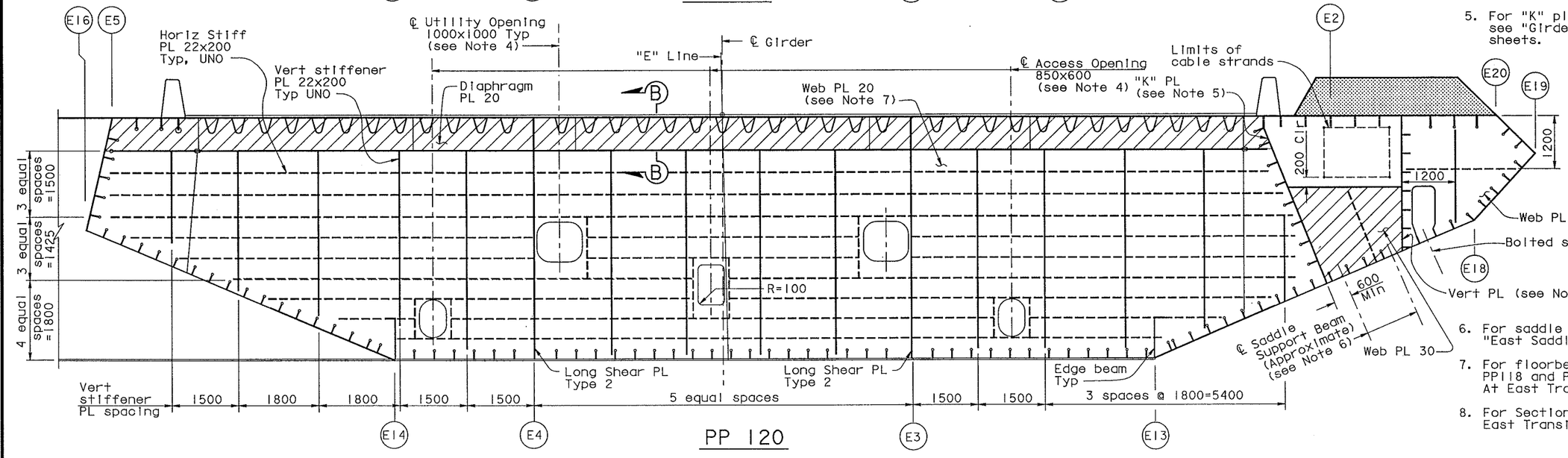

PP 120

LEGEND:

- Saddle Housing (see Note 3)
- "Indicates SPCM web plate"

6. For saddle support beams details, see "East Saddle Details No.7" sheet.
7. For floorbeam web plate details at PP118 and PP120, see "Floorbeam At East Transition Details No.2" sheet.
8. For Section B-B, see "Floorbeam At East Transition Details No.1" sheet.

"E" LINE SECTION (see Note 2)
1:50

ALL DIMENSIONS ARE IN MILLIMETERS UNLESS OTHERWISE SHOWN

R. Valizadeh/V. Toan/Y.L./W.L./F.C.
DESIGN OVERSIGHT
SIGN OFF DATE 11/16/07

	BY	CHECKED
DESIGN	G. Baker	P. Ritchie
DETAILS	S. Camo	T. McMeans
QUANTITIES	C. Mauch	M. Roberts

PREPARED FOR THE STATE OF CALIFORNIA DEPARTMENT OF TRANSPORTATION

R. Manzanarez
PROJECT ENGINEER

BRIDGE NO. 34-0006L/R
KILOMETER POST 13.2/13.9

SAN FRANCISCO OAKLAND BAY BRIDGE
EAST SPAN SEISMIC SAFETY PROJECT
SELF-ANCHORED SUSPENSION BRIDGE
(SUPERSTRUCTURE & TOWER)

FLOORBEAM AT EAST TRANSITION NO. 2

Rev. Date: 5-18-98

ORIGINAL SCALE IN MILLIMETERS FOR REDUCED PLANS 0 10 20 30 40 50 60 70 80 90 100

CU 04
EA 0120F1

DISREGARD PRINTS BEARING EARLIER REVISION DATES

REVISION DATES (PRELIMINARY STAGE ONLY): 01/15/99 05/15/99 09/20/99 05/31/01 04/08/02 07/29/02 12/19/02

SHEET 289R1 OF

FILE => I:\bb\04-0120F1\sas\contract plans and cco\cco\in progress\cco*42s1\dgn\agefd02.dgn

100% PS&E

DATE PLOTTED => 16 NOV 2007 TIME PLOTTED => 14:19:24

USERNAME => klo