| DIST | COUNTY | ROUTE | KILOMETER POST TOTAL PROJECT | SHEET No | TOTAL SHEETS |
|---|---|---|---|---|---|
| 04 | SF | 80 | 13.2/13.9 | 80R1 | 1204 |

REGISTERED CIVIL ENGINEER 4/2/04

12-6-04
PLANS APPROVAL DATE

REGISTERED PROFESSIONAL ENGINEER Mee Shing Owyang No. 24960 Exp. 12/31/07 CIVIL STATE OF CALIFORNIA

*The State of California or its officers or agents shall not be responsible for the accuracy or completeness of electronic copies of this plan sheet.*

Parsons Brinckerhoff Quade & Douglas, Inc.
303 Second Street, Suite 700N
San Francisco, CA 94107

*Caltrans now has a web site! To get to the web site, go to: http://www.dot.ca.gov*

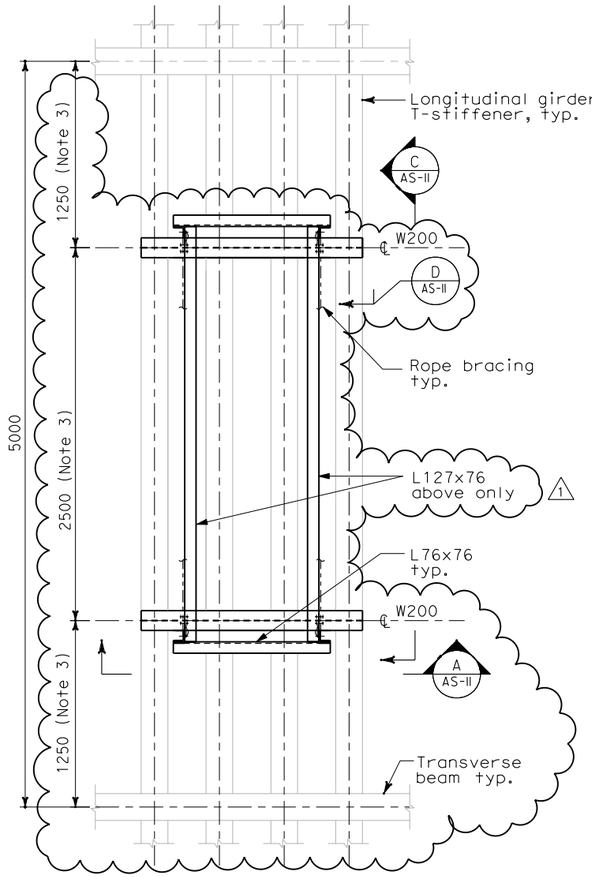


AT T-STIFFENERS

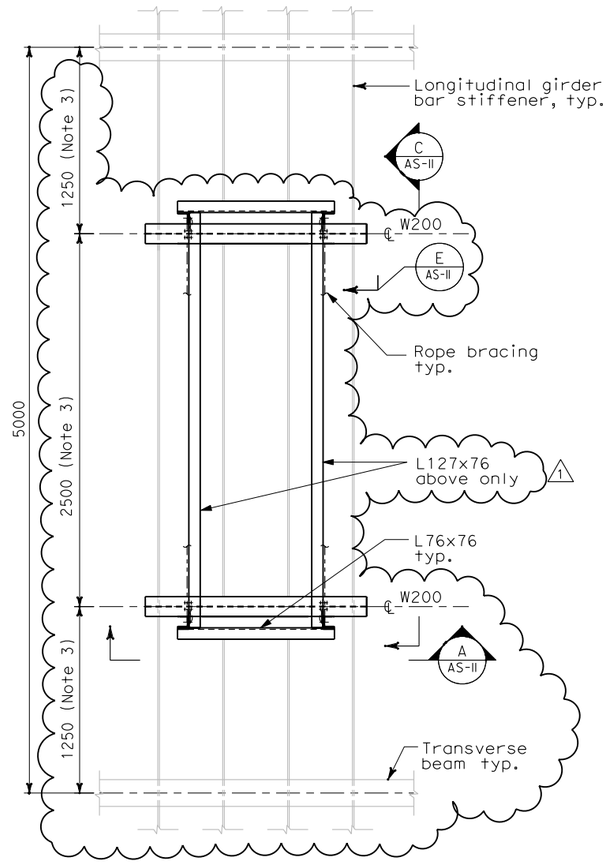


AT BAR-STIFFENERS

## CABLE TRAY SUPPORT PLAN (TYPE I AND II) 1

SCALE 1:20

## NOTES:

1. The contractor shall verify all controlling field dimensions before ordering or fabricating any material.
2. For structural notes, see sheet AS-1.
3. For cable tray support locations, see electrical plans and dwgs AS-16K through AS-16R. 1
4. For longitudinal girder stiffener sizes and locations, see SAS superstructure plan.

REGISTERED PROFESSIONAL ENGINEER Mee Shing Owyang No. 24960 Exp. 12/31/09 CIVIL STATE OF CALIFORNIA

FOR REVISION ONLY

*REQUEST FOR INFORMATION NOT ADDRESSED IN THIS CCO REMAIN IN FORCE*

| MARK | DATE | DESCRIPTIONS | BY | CH'D | CCO# |
|---|---|---|---|---|---|
| 1 | 02/25/08 | CABLE TRAY CHANGES | RG | MSO | 42S1 |

REVISIONS

CONTRACT CHANGE ORDER NO. _____
SHEET _____ OF _____

ALL DIMENSIONS ARE IN MILLIMETERS UNLESS OTHERWISE SHOWN

Bob Zandipour
DESIGN OVERSIGHT

SIGN OFF DATE

| | BY | CHECKED |
|---|---|---|
| DESIGN | M. S. Owyang | R. Howell |
| DETAILS | D. Chin | M. S. Owyang |
| QUANTITIES | I. Horton | P. McNamee |

**PREPARED FOR THE STATE OF CALIFORNIA DEPARTMENT OF TRANSPORTATION**

Gene Lusherovich
PROJECT ENGINEER

BRIDGE NO. 34-0006
KILOMETER POST 13.2/13.9

# SAS SUPERSTRUCTURE

## CABLE TRAY SUPPORT PLAN

**AS-10**

SHEET 10 OF 16

DISREGARD PRINTS BEARING EARLIER REVISION DATES

REVISION DATES (PRELIMINARY STAGE ONLY)

CU 04251
EA 0120F1

DESIGN DETAIL SHEET (METRIC) (REV. 3/1/98)

ORIGINAL SCALE IN MILLIMETERS FOR REDUCED PLANS 0 10 20 30 40 50 60 70 80 90 100

FILE => T:\13103\MS\pse\SAS Struc\CCO\SAS CCO42S1\CCO 42S1 Final Submittal 2008-07-11\04-0120f1_0080R01.dgn

$FREQUEST

USERNAME => garcior DATE PLOTTED => 8/28/2008 TIME PLOTTED => 3:15:36 PM