DIST	COUNTY	ROUTE	KILOMETER POST TOTAL PROJECT	SHEET No	TOTAL SHEETS
04	SF	80	13.2/13.9	91R1	1204

REGISTERED ELECTRICAL ENGINEER — 12/19/02 (DATE)

12-6-04
PLANS APPROVAL DATE

REGISTERED PROFESSIONAL ENGINEER — JENS ERLINGSSON No. 8249 Exp. 9/30/06 ELECTRICAL — STATE OF CALIFORNIA

PB POWER, Inc.
A Parsons Brinckerhoff Company
303 Second St., Suite 700N
San Francisco, CA 94107-1317

The State of California or its officers or agents shall not be responsible for the accuracy or completeness of electronic copies of this plan sheet.

Caltrans now has a web site! To get to the web site, go to http://www.dot.ca.gov

Caltrans Metric

REQUEST FOR INFORMATION NOT ADDRESSED IN THIS CCO REMAIN IN FORCE

MARK	DATE	DESCRIPTIONS	BY	CH'D	CCO#
		REVISIONS			
1	02/19/08	ELECTRICAL MODIFICATIONS	MP EL	RR	42

CONTRACT CHANGE ORDER NO. _____
SHEET _____ OF _____

CALCULATED/ DESIGNED BY	CHECKED BY
AB	JW

DATE	REVISED BY	DATE REVISED
08/02		09/02

STATE OF CALIFORNIA - DEPARTMENT OF TRANSPORTATION
Caltrans
DESIGN OVERSIGHT
BEHZAD GOLEMOHAMMADI

SYMBOLS

(See ES-1A and ES-1B for Additional Standard Symbols)

LAYOUT PLAN

- Barrier Pull Box, for type and size, see Pull Box Schedule
- PB-2A — Pull Box, PB-2A for type and size, see Pull Box Schedule
- Conduit Coupling
- (A) — Equipment or Material Designation, A=Sequential description
- (1) — Sheet Notes, applicable only to the Drawing, 1=Sequential number
- [1] — Project Notes, Applicable for all Drawings, 1=sequential number
- Junction Box, Conduit Fitting
- Electrical Equipment or Indicated on Plan Drawings
- Pole Mounted Lighting Fixture- See Lighting Pole Schedule for Type and Quantity
- Fluorescent Lighting Fixture
- Compact Fluorescent Lighting Fixture, Ceiling Mounted or main cable and suspender base metal halide lighting fixture
- Compact Fluorescent Lighting Fixture Wall Mounted
- Soffit Lighting Fixture or tower marker light
- (G) — Navigation Channel Marker Light - Green Color
- (R) — Navigation Pier Marker Light - Red Color
- (A1) (A2) — Aviation Lighting
- [F] — Fog Detector
- [F] — Fog Horn
- Pole Flood Light
- Single Receptacle, 20 A, 125 V, Straight blade, with deep single gang weatherproof and threaded cap (1)
- GFCI WP — Duplex Receptacle, 125 V, 20 A, MH=450 mm above floor unless noted, GFCI=Ground Fault Circuit Interrupter, WP=Weatherproof
- $_a WP — Single Pole Switch, 120/277 V, 20 A, a - indicates Fixtures controlled, WP - Weatherproof Cover, MH - 1400 mm unless noted
- $_3a WP — Three-way switch, 120/277 V, 20 A, a - indicates Fixtures controlled, WP - indicates Weatherproof Cover, MH - 1400 mm unless noted
- $_4a WP — Four-way switch, 120/277 V, 20 A, a - indicates Fixtures controlled, WP - indicates Weatherproof Cover, MH - 1400 mm unless noted
- 30 A — Disconnect Switch, 30 A-Frame size
- Conduit turned up
- Conduit turned down
- Conduit or Cable run, exposed
- Conduit run concealed in wall, concrete barrier, slab or routed underground duct bank
- Combination Expansion - Deflection fittings
- Flexible Conduit
- CT — Cable Tray
- Cable Tray
- Cables or Conduit down to Equipment (see plan for conduit number)

- Call Box, State furnished
- Ground Bare Copper Wire, Stranded
- Cable To Cable Exothermic Type Ground Connections
- Cable Ground Connection to Equipment, Compression Type
- Cable with Pigtail Ground Connections (see plan for length)

TRAFFIC OPERATIONS SYSTEMS (TOS)

- CCTV Camera (Mounted at Lighting Pole)
- Changeable Message Sign
- Preformed Loops
- Microwave Vehicle Detection Sensor (Mounted at Lighting Pole)
- Ramp Meter Signal

SINGLE LINE DIAGRAM

- 200/5 MRCT 3 — MM — SSPP — 67 / 67N: Microprocessor protective relay, MM = Metering Module, SSPP = Solid State Protective Package, 67,67N = Directional Overcurrent Relay, MRCT = Multi Ratio Current Transformer, 200/5 = Current Amp/Ratio, 3 = Quantity
- 1200 A / 500 MVA — 52 — 52-11N — N.C.(or N.O.): Vacuum Circuit Breaker, (Drawout Type), 1200 A = Rating, 500 MVA = Nominal Interrupting Class, 52 11N = Assigned Breaker Number, N.C. = Normally Closed, N.O. = Normally Open
- 600-800 A / 42000 — 52S-1 E.O.: Air Circuit Breaker (Drawout Type), 600-800 A = Rating, 42000 = Interrupting Current, E.O. = Electrically Operated, 52S-1 = Assigned breaker Number, 800/5 = Current Transformer Setting, 3 = Quantity
- 800/5 3 — L,S,G: Solid state Trip Device, L = Long Time Delay, S = Short Time Pick up/Delay, G = Ground Fault pick up/Delay
- 750 kVA, 12.47 kV / 480 V: Transformer, Distribution, Dry Type, 12.47 kV = Delta Primary, 480 V = Wye Secondary, 750 kVA = Size
- MCP, 2 or 30 A, 30 A, (3): Combination Motor Starter, Drawout Type, MCP = Motor Circuit Protector, 2 = Starter NEMA Size, 30 A = Contactor Rating; Safety Switch, 30 A = Frame Size; Rotating Motor, 3 = kW Rating
- 50 AT / 150 AF: Molded Case Circuit Breaker, Drawout Type, 50 AT = Trip Rating, 150 AF = Frame Size
- Package Equipment or Panelboard
- 12 kV-120 V: Potential Transformer, Connected Open Delta
- 800/5 3: Current Transformer, 800/5 = Current AMP/Ratio, 3 = Quantity
- Stress Relief Cable Connection
- or — Fuse

ELEMENTARY/CONNECTION DIAGRAMS

- Bk / W — Signal Cable with Shield
- Contact, Normally open
- Contact, Normally Closed
- (M) or — Relay, Mechanical, M = Motor, C = Contactor, 42 = Running Circuit Breaker, X or Y = Auxiliary, R = Industrial, TD = Time Delay, PEC = Photo Electric Control
- OL — Motor Starter Overload Relay Thermal Bimetallic Element (OL-Overload)
- ON/OFF Switch
- DC Batteries
- AC/DC Inverter (Battery Charger/Rectifier)
- End Resistor and Capacitor
- Photoelectric Sensor
- 6 / 7 — Communication Cable Noise Suppressor; Terminal Block
- Duplex Receptacle
- Cabinet Fluorescent Light

REGISTERED PROFESSIONAL ENGINEER — MAXWELL FUMIO TAKATA No. E 8651 Exp. 9/30/2008 ELECTRICAL — STATE OF CALIFORNIA

FOR REVISION ONLY

DEVICE NUMBER DEFINITIONS

27B	12.47 kV Bus Undervoltage Relay
27D	DC Undervoltage Relay
27F	Feeder Undervoltage Relay
27UV	480 V Bus Undervoltage Relay
42	Running Circuit Breaker
43/R	Manual Transfer / Remote
43/L	Manual Transfer / Local
49	Thermal Relay
50	Instantaneous Overcurrent Relay
51	AC Time Overcurrent Relay
51/51N	Phase and Ground Fault Time Overcurrent Relay
52	AC Circuit Breaker
67	AC Directional Overcurrent Relay
67N	AC Directional Ground Overcurrent Relay
86	Lock-Out Relay
88	Auxiliary Motor

ELECTRICAL SYMBOLS

NO SCALE

E-6

LAST REVISION 00-00-00
DATE PLOTTED => 3/17/2008
TIME PLOTTED => 3:51:57 PM

FOR REDUCED PLANS ORIGINAL SCALE IS IN MILLIMETERS 0 20 40 60 80

DGN FILE =>T:\13103\MS\pse\SAS Struc\CCO\SAS CC042\04-0120f1_0091R01.dgn
USERNAME =>llorico

CU 04251

EA 0120F1

TRAFFIC OPERATIONS SYSTEMS (TOS)

AVO	Analog Video Output
CCR	Camera Control Receiver
CCU	Camera Control Unit
CIA	Controller Interface Assembly
COMM	Communication
FDU	Fiber Distribution Unit
F/O	Fiber Optic
FODM	Fiber Optic Data Modem
FDC	Fiber Optic Drop Cable
FPC	Fiber Optic Pigtail Cable
FSC	Fiber Splice Closure
FTC	Fiber Optic Trunkline Cable
IF	Input File
MVDS	Microwave Vehicle Detection Sensor
PDA	Power Distribution Assembly
PL	Preformed Loop Detection Station
SCA	Serial Cable Assembly
SMFO	Single Mode Fiber Optic
TB	Terminal Box
TSC	Trunkline Splice Closure
TVCP	CCTV Camera Control Power Cable
TVC	CCTV Camera Control Cable
TVL	CCTV Camera Video Cable
TVP	CCTV Camera Power Cable
VTDD	Video Transmitter Duplex Data

PROJECT NOTES

1. 27C, 2#12 + #12 G.
2. 27C, 2#10 + #10 G.
3. 27C, 4#10 + #10 G.
4. 27C, 3#10 + #10 G.
5. 27C (Type 4), 2#12 + #12 G.
6. 27C (Type 4), 2#10 + #10 G.
7. 41C, 2-6 pairs #18, IS/OA.
8. 78C, 50 Pairs #18, IS/OA.
9. 27C, 3/C #6 + #8G. △1
10. 21C, 2-1 pair #18 (for Call Box signal) shielded pairs and overall shield.
11. 21C, 3#12 (for Call Box power).
12. 21C, (4) 1 pair #18 (for Call Box signal). Part of (2) 1-2 pairs #18, shielded pairs and overall shield.
13. 78C, 2#2 + #6 G and 2#10 + #10 G (for CMS Power).
14. 78C, Harness #4 and Harness #5 (for CMS Signal).
15. 41C, Cable type TVP and TVCP (for CCTV Power).
16. 41C, Cable type TVC and TVL (for CCTV Control Signal).
18. 41C, Cable type MVDS DLC (for MVDS Signal).
20. △1 78C, Cable type 10 DLC (for Preformed Loop Signal).
21. 27C (Flexible Conduit) 6#10 + #10 G.
22. 27C (Flexible Conduit) 3#10 + #10 G.
23. 27C, 7#10 + #10 G.
24. 27C, 6#10 + #10 G.

PROJECT NOTES (Continuation)

25. 27C, 7#10 + #10 G.
26. 41C, 3#6 + #8 G.
27. 41C, 3#8 + #10 G.
28. 21C, PVC coated - 2#10 + #10 G.
29. 21C, PVC coated, 3#12 (for Call Box Power).
30. 500 kcmil Bare Copper Wire.
31. 250 kcmil Bare Copper Wire.
32. #4/0 Bare Copper Wire.
33. #2 Bare Copper Wire.
34. 41C, 3#6 + #8 G, 3#8 + #10 G.
35. 41C, 6#8 + #10 G.
36. 21C, PVC coated, 1-2 pairs #18 (For Call Box signal).
37. Metal clad type cable with PVC overall jacket 3/C #10 (for Bike Path lighting).
38. Metal clad type cable with PVC overall jacket 1-2 pairs #18, shielded pairs and overall shield (for Call Box signal).
39. Metal clad type cable with PVC overall jacket 3/C #12 (for Call Box signal).
40. 78C, Cable Type A Fiber Optic.
41. 21C, (Flexible Conduit) 2#10 + 10 G.
42. 27C, 2#12 + #12G, 2#10 + #10G.
43. 21C, (Flexible conduit) 2#12 + 12 G.
44. 41C, 2#12 + #12 G, 6#10 + #10 G.
45. 27C, 2#12 + #12 G, 4#10 + #10 G.
46. 27C, flexible metallic conduit, 4#10 + #10G. △1
47. 41C, flexible metallic conduit, (MVDS DLC).
48. 27C, 3#6 + #8G. Flexible metallic conduit.

GENERAL NOTES

1. Conduit routing is diagrammatic. Pull box locations shall be located as shown on plan drawings. The Contractor shall provide additional pull boxes as required. Exact locations of equipment and devices may be adjusted depending on field conditions or by the Engineer.
2. Minimum size of conduits shall be 21 mm. Exposed conduits shall be PVC coated rigid galvanized steel, and conduits located inside girder shall be rigid galvanized steel.
3. Conduit fittings for 78 mm conduits and larger shall have a 610 mm minimum bending radius.
4. All conduits, including spares, shall be provided with pull wires prior to cable installations.
5. All equipment and devices shall be provided with nameplate tags per drawings.
6. All feeders and branch circuits shall be provided with ground wire.
7. 15 kV splice boxes shall be installed as shown and permanently marked "DANGER-HIGH VOLTAGE-KEEP OUT". The letters shall be block type and at least 50 mm in height.
8. The Contractor shall label all conductors and cables per wiring diagrams.
9. Padlocks shall be installed on all cabinets located on the platforms to prevent unauthorized access.
10. Call boxes will be State-furnished. (The Contractor shall install and terminate conductors per wiring diagram.
11. Ladder type cable trays shall be installed for each 15 kV and 600 V systems.
12. Solid bottom cable trays shall be installed for each low level signals, CALTRANS communications, fiber optic systems, and for Non-Caltrans utilities.
13. For Strong Motion Detection System general notes, see sheet E-361.
14. All E sheets are accurate for electrical work only.
15. All dimensions are in millimeters unless otherwise shown.
16. All unused conductors inside pull boxes shall be taped and coiled.
17. "Similar" when shown on the plans means this detail is applicable to different structure and conduit sizes.
18. Electrical fixtures shall not be field welded to the box girders or crossbeams. All welding to the box girders and crossbeams shall be shown on the box girder and crossbeam shop drawings for review and approval by the Engineer.
19. All welding of electrical fixtures to the tower shall be shown on the tower shop drawings for review and approval by the Engineer.
20. All connections to steel elements of the self-anchored suspension bridge superstructure of electrical equipment and fixtures, including conduits, pull boxes, lighting fixtures, messenger cables and others, shall be shop welded or bolted. All connection details shall appear on the working drawings for review and approval by the Engineer.
21. Prior to ordering any cable tray support structures, the Contractor shall:
    - Refer to Structural sheets to determine the locations of cable tray support structures.
    - Determine, based upon field conditions, when and where to use cable tray vertical or horizontal bends, horizontal tees or reducers.
    - Refer to AS-sheets to determine the type of cable tray support to use based on field conditions.
    - Cable tray support structures shown on the AS-sheets are generic and may have to be adapted to suit field conditions.
    - All modifications to the cable tray support structures as shown on the AS-sheets shall be approved by the Resident Engineer.
22. All installation of electrical conduit, equipment or pull boxes shall be either shop welded or bolted.

DIST	COUNTY	ROUTE	KILOMETER POST TOTAL PROJECT	SHEET No	TOTAL SHEETS
04	SF	80	13.2/13.9	93R1	1204

Jens Erlingsson 12/19/02
REGISTERED ELECTRICAL ENGINEER DATE

12-6-04
PLANS APPROVAL DATE

REGISTERED PROFESSIONAL ENGINEER — JENS ERLINGSSON — No. 8249 — Exp. 9/30/06 ELECTRICAL — STATE OF CALIFORNIA

PB POWER, Inc.
A Parsons Brinckerhoff Company
303 Second St., Suite 700N
San Francisco, CA 94107-1317

The State of California or its officers or agents shall not be responsible for the accuracy or completeness of electronic copies of this plan sheet.

Caltrans now has a web site! To get to the web site, go to http://www.dot.ca.gov

REGISTERED PROFESSIONAL ENGINEER — MAXWELL FUMIO TAKATA — No. E 8651 — Exp. 9/30/2008 ELECTRICAL — STATE OF CALIFORNIA

FOR REVISION ONLY

REQUEST FOR INFORMATION NOT ADDRESSED IN THIS CCO REMAIN IN FORCE

MARK	DATE	DESCRIPTIONS	MP EL BY	RR CH'D	42 CCO#
		REVISIONS			
△1	02/19/08	ELECTRICAL MODIFICATIONS			

CONTRACT CHANGE ORDER NO. _____
SHEET _____ OF _____

CALCULATED/ DESIGNED BY	DATE 08/02	REVISED BY	IAH 3/04
CHECKED BY	09/02	DATE REVISED	
JW	AB		

DESIGN OVERSIGHT — BEHZAD GOLEMOHAMMADI

STATE OF CALIFORNIA - DEPARTMENT OF TRANSPORTATION — Caltrans

ELECTRICAL NOTES AND ABBREVIATIONS

E-8

LAST REVISION 00-00-00
DATE PLOTTED => 3/17/2008
TIME PLOTTED => 3:45:00 PM

FOR REDUCED PLANS ORIGINAL SCALE IS IN MILLIMETERS 0 20 40 60 80

DGN FILE =>T:\13103\MS\pse\SAS Struc\CCO\SAS CCO42\04-0120f1_0093R01.dgn
USERNAME =>llorico

CU 04251

EA 0120F1

CCO #42 Review Comments
By
Sandy Michelotti & Michael Travis
March 2008

DIST	COUNTY	ROUTE	KILOMETER POST TOTAL PROJECT	SHEET No	TOTAL SHEETS
04	SF	80	13.2/13.9	117R1	1204

12/19/02
REGISTERED ELECTRICAL ENGINEER DATE

12-6-04
PLANS APPROVAL DATE

REGISTERED PROFESSIONAL ENGINEER — JENS ERLINGSSON No. 8249 Exp. 9/30/06 ELECTRICAL — STATE OF CALIFORNIA

PB POWER, Inc.
A Parsons Brinckerhoff Company
303 Second St., Suite 700N
San Francisco, CA 94107-1317

The State of California or its officers or agents shall not be responsible for the accuracy or completeness of electronic copies of this plan sheet.

Caltrans now has a web site! To get to the web site, go to http://www.dot.ca.gov

Caltrans Metric

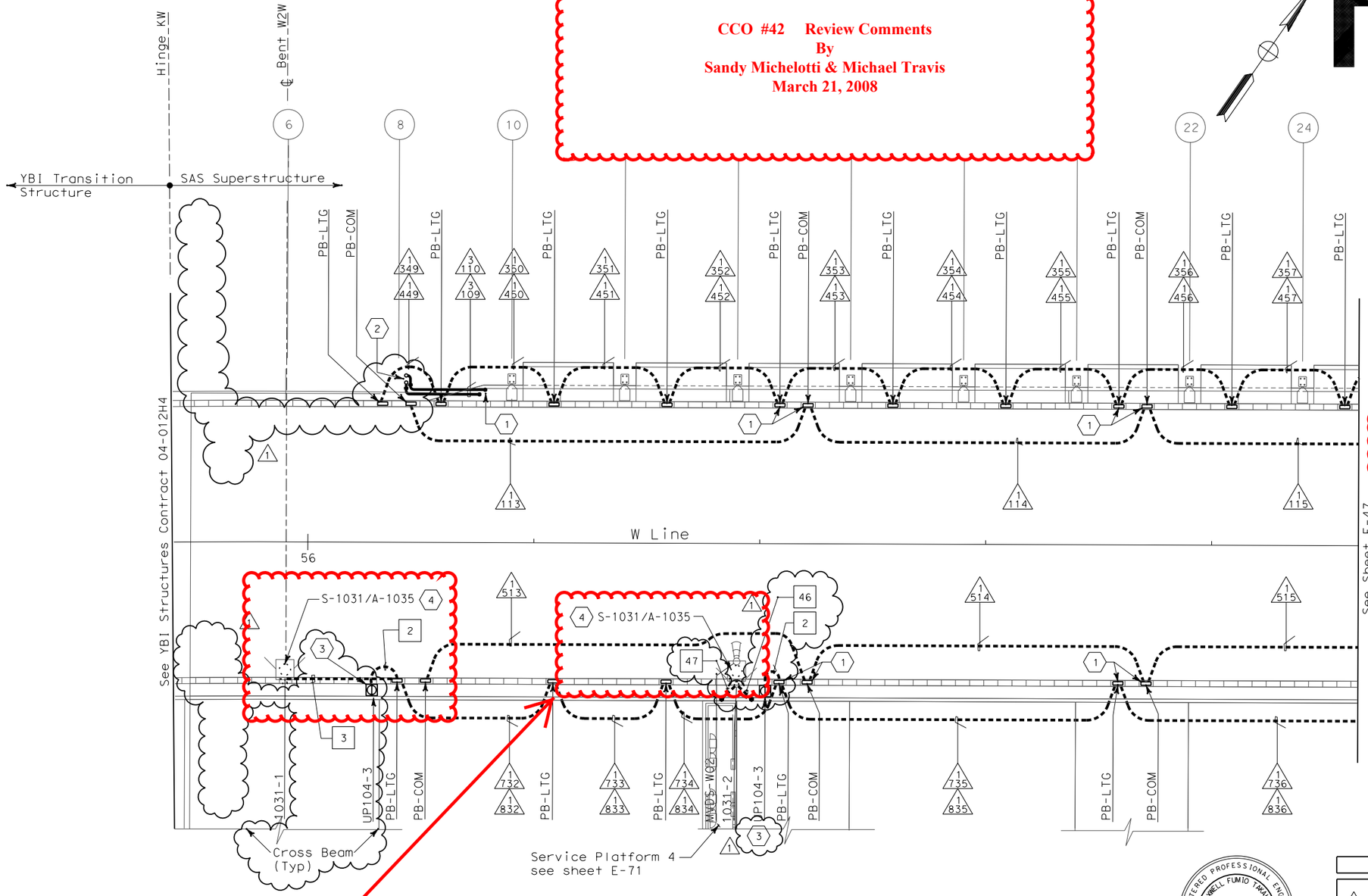

SHEET NOTES:

1. Conduit from barrier pullbox or other equipment down into Girder, see sheet E-96.
2. For conduit to Suspend Lighting, see sheet E-226. Typ for all PB-LTG located on the north side of the roadway.
3. Roadway Barrier Receptacle, see Detail 1, sheet E-68.
4. Light pole, luminaires and lowering device are state furnished and installed by contractor.

NOTES:

1. References:
   - For typical details and locations of conduit connections to light poles, barrier outlet boxes, call boxes, overhead sign lighting, CCTV and MVDS, see sheets E-66, E-67 and E-68.
   - TOS equipment is shown for conduit routing only. For typical details of TOS controller and devices, see sheets E-344 through E-357.
   - For types of pullboxes, splice boxes and enclosures, see sheet E-83.
   - For circuit and conduit/cable tray schedules, see sheets starting at E-401.
2. For Roadway Level Lighting Pole Schedules, see sheet E-82.

The following are review comments for this sheet

1. The removal of the light poles are not in this CCO.
   Remove all references to state furnished poles and detailing showing the poles are by others.
   The removal of the poles will take place in CCO #43.

CONDUIT PLAN

REGISTERED PROFESSIONAL ENGINEER — MAXWELL FUMIO TAKATA No. E 8651 Exp. 9/30/2008 ELECTRICAL — STATE OF CALIFORNIA

FOR REVISION ONLY

REQUEST FOR INFORMATION NOT ADDRESSED IN THIS CCO REMAIN IN FORCE

MARK	DATE	DESCRIPTIONS	BY	CH'D	CCO#
		REVISIONS			
1	02/19/08	ELECTRICAL MODIFICATIONS	MP EL	RR	42

CONTRACT CHANGE ORDER NO._____
SHEET _____ OF _____

SAS SUPERSTRUCTURE ROADWAY WESTBOUND
LIGHTING AND ELECTRICAL SYSTEMS

SCALE 1:200

E-46

CALCULATED/ DESIGNED BY	CHECKED BY	DATE	REVISED BY	DATE REVISED
FK	IAH	8/02		8/02

STATE OF CALIFORNIA - DEPARTMENT OF TRANSPORTATION
Caltrans
DESIGN OVERSIGHT
BEHZAD GOLEMOHAMMADI

THIS PLAN IS ACCURATE FOR ELECTRICAL WORK ONLY.

FOR REDUCED PLANS ORIGINAL SCALE IS IN MILLIMETERS 0 20 40 60 80

DGN FILE =>T:\13103\MS\pse\SAS Struc\CCO\SAS CC042\04-0120f1_0117R01.dgn
USERNAME =>llorico

CU 04251

EA 0120F1

LAST REVISION 00-00-00
DATE PLOTTED => 3/17/2008
TIME PLOTTED => 3:52:22 PM

DIST	COUNTY	ROUTE	KILOMETER POST TOTAL PROJECT	SHEET No	TOTAL SHEETS
04	SF	80	13.2/13.9	118R1	1204

12/19/02
REGISTERED ELECTRICAL ENGINEER DATE

REGISTERED PROFESSIONAL ENGINEER — JENS ERLINGSSON No. 8249 Exp. 9/30/06 ELECTRICAL — STATE OF CALIFORNIA

12-6-04
PLANS APPROVAL DATE

PB POWER, Inc.
A Parsons Brinckerhoff Company
303 Second St., Suite 700N
San Francisco, CA 94107-1317

The State of California or its officers or agents shall not be responsible for the accuracy or completeness of electronic copies of this plan sheet.

Caltrans now has a web site! To get to the web site, go to http://www.dot.ca.gov

Caltrans Metric

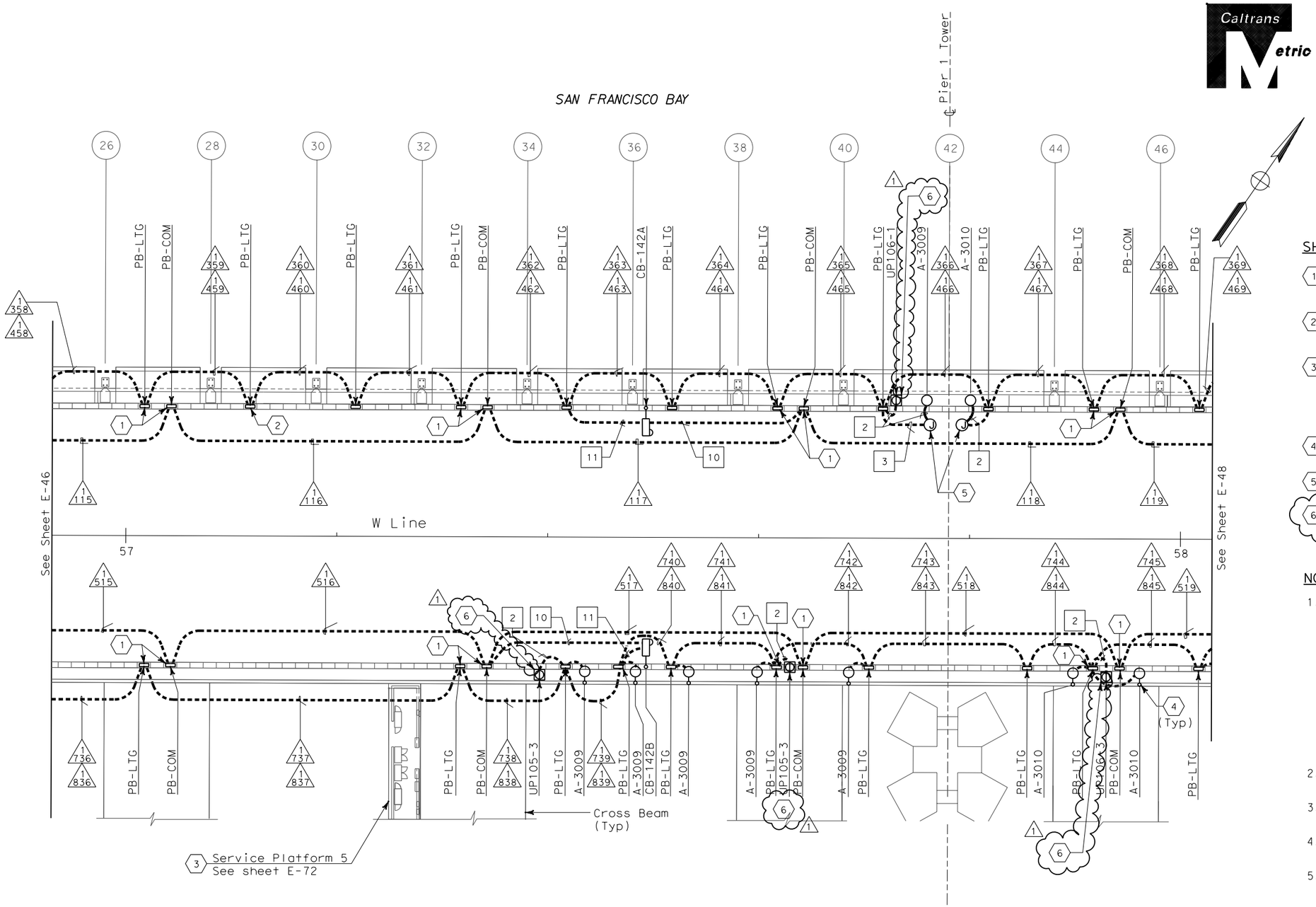

SHEET NOTES:

1. Conduit from barrier pullbox or other equipment down into Girder, See sheet E-97.
2. For conduit to Suspend Lighting, See sheet E-227. Typ for all PB-LTG located on the north side of the roadway.
3. Contractor shall furnish and install UP-105 per sheet E-72. For complete scope of work on platform and other related work not shown on this sheet, see Electrical Special Provisions.
4. See sheet E-67 for pylon floodlight conduit location.
5. Type PB-1C junction box is used on suspender brackets.
6. Roadway Barrier Receptacle, see Detail 1, sheet E-68.

NOTES:

1. References:
   - For typical details and locations of conduit connections to light poles, barrier outlet boxes, call boxes, overhead sign lighting, CCTV and MVDS, see sheets E-67, E-68 and E-68.
   - TOS equipment is shown for conduit routing only. For typical details of TOS controller and devices, see sheets E-344 through E-357.
   - For types of pullboxes, splice boxes and enclosures, see sheet E-83.
   - For circuit and conduit/cable tray schedules, see sheets starting at E-401.
2. For Roadway Call Boxes, refer to sheet E-396.
3. For Roadway Level Lighting Pole Schedule, see sheet E-82.
4. For Roadway Level Call Box Schedule, see sheet E-397.
5. For number of lighting fixtures (main tower lights), see lighting schedule sheets E-271 and E-272.

REGISTERED PROFESSIONAL ENGINEER — MARWELL FUMIO TAKATA No. E 8651 Exp. 9/30/2008 ELECTRICAL — STATE OF CALIFORNIA

FOR REVISION ONLY
THIS PLAN IS ACCURATE FOR ELECTRICAL WORK ONLY.

REQUEST FOR INFORMATION NOT ADDRESSED IN THIS CCO REMAIN IN FORCE					
1	02/19/08	ELECTRICAL MODIFICATIONS	MP EL	RR	42
MARK	DATE	DESCRIPTIONS	BY	CH'D	CCO#
REVISIONS					

CONTRACT CHANGE ORDER NO. _____
SHEET _____ OF _____

CONDUIT PLAN

SAS SUPERSTRUCTURE ROADWAY WESTBOUND
LIGHTING AND ELECTRICAL SYSTEMS

SCALE 1:200

E-47

CALCULATED/ DESIGNED BY	CHECKED BY	DATE	REVISED BY	DATE REVISED
FK	IAH	8/02		8/02

STATE OF CALIFORNIA - DEPARTMENT OF TRANSPORTATION
Caltrans
DESIGN OVERSIGHT
BEHZAD GOLEMOHAMMADI

FOR REDUCED PLANS ORIGINAL SCALE IS IN MILLIMETERS 0 20 40 60 80

DGN FILE =>T:\13103\MS\pse\SAS Struc\CCO\SAS CC042\04-0120f1_01 8R01.dgn
USERNAME =>llorico
CU 04251
EA 0120F1

LAST REVISION 00-00-00
DATE PLOTTED => 3/17/2008
TIME PLOTTED => 3:52:55 PM

DIST	COUNTY	ROUTE	KILOMETER POST TOTAL PROJECT	SHEET No	TOTAL SHEETS
04	SF	80	13.2/13.9	119R1	1204

Jens Erlingsson 12/19/02
REGISTERED ELECTRICAL ENGINEER DATE

12-6-04
PLANS APPROVAL DATE

REGISTERED PROFESSIONAL ENGINEER — JENS ERLINGSSON No. 8249 Exp. 9/30/06 ELECTRICAL — STATE OF CALIFORNIA

PB POWER, Inc.
A Parsons Brinckerhoff Company
303 Second St., Suite 700N
San Francisco, CA 94107-1317

The State of California or its officers or agents shall not be responsible for the accuracy or completeness of electronic copies of this plan sheet.

Caltrans now has a web site! To get to the web site, go to http://www.dot.ca.gov

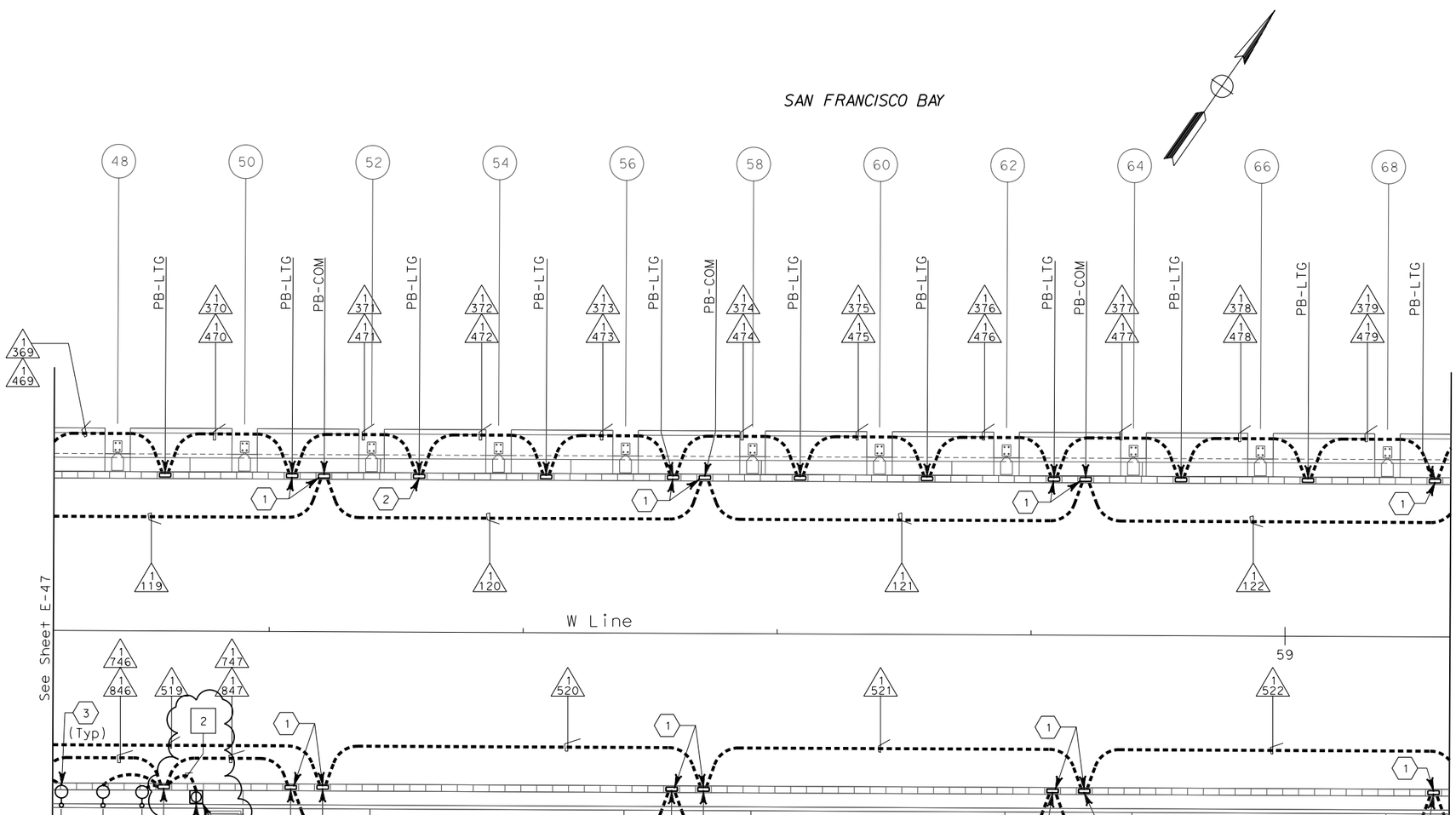

CONDUIT PLAN

SHEET NOTES:

1. Conduit from barrier pullbox or other equipment down into Girder, See sheet E-98.
2. For conduit to Suspend Lighting, see sheet E-228. Typ for all PB-LTG located on the north side of the roadway.
3. See sheet E-67 pylon floodlight conduit location.
4. Roadway Barrier Receptacle, see Detail 1, sheet E-68.

NOTES:

1. References:
   - For typical details and locations of conduit connections to light poles, barrier outlet boxes, call boxes, overhead sign lighting, CCTV and MVDS, see sheets E-66, E-67 and E-68.
   - TOS equipment is shown for conduit routing only. For typical details of TOS controller and devices, see sheets E-344 through E-357.
   - For types of pullboxes, splice boxes and enclosures, see sheet E-83.
   - For circuit and conduit/cable tray schedules, see sheets starting at E-401.
2. For Roadway Level Light Pole Schedule, see sheet E-82.
3. For number of lighting fixtures (main tower lights), see lighting schedule sheets E-271 and E-272.

REGISTERED PROFESSIONAL ENGINEER — MAXWELL FUMIO TAKAKI No. E 8651 Exp. 9/30/2008 ELECTRICAL — STATE OF CALIFORNIA

FOR REVISION ONLY

REQUEST FOR INFORMATION NOT ADDRESSED IN THIS CCO REMAIN IN FORCE

MARK	DATE	DESCRIPTIONS	BY	CH'D	CCO#
		REVISIONS			
1	02/19/08	ELECTRICAL MODIFICATIONS	MP EL	RR	42

CONTRACT CHANGE ORDER NO. _____
SHEET _____ OF _____

THIS PLAN IS ACCURATE FOR ELECTRICAL WORK ONLY.

SAS SUPERSTRUCTURE ROADWAY WESTBOUND
LIGHTING AND ELECTRICAL SYSTEMS

SCALE 1:200

E-48

CALCULATED/ DESIGNED BY	FK	DATE 8/02	REVISED BY
CHECKED BY	IAH	8/02	DATE REVISED

DESIGN OVERSIGHT — BEHZAD GOLEMOHAMMADI

STATE OF CALIFORNIA - DEPARTMENT OF TRANSPORTATION — Caltrans

LAST REVISION 00-00-00 — DATE PLOTTED => 3/17/2008 TIME PLOTTED => 3:53:27 PM

FOR REDUCED PLANS ORIGINAL SCALE IS IN MILLIMETERS 0 20 40 60 80

DGN FILE =>T:\13103\MS\pse\SAS Struc\CCO\SAS CCO42\04-0120f1_0119R01.dgn
USERNAME =>llorico

CU 04251 — EA 0120F1

DIST	COUNTY	ROUTE	KILOMETER POST TOTAL PROJECT	SHEET No	TOTAL SHEETS
04	SF	80	13.2/13.9	120R1	1204

12/19/02
REGISTERED ELECTRICAL ENGINEER DATE

12-6-04
PLANS APPROVAL DATE

REGISTERED PROFESSIONAL ENGINEER — JENS ERLINGSSON No. 8249 Exp. 9/30/06 ELECTRICAL — STATE OF CALIFORNIA

PB POWER, Inc.
A Parsons Brinckerhoff Company
303 Second St., Suite 700N
San Francisco, CA 94107-1317

The State of California or its officers or agents shall not be responsible for the accuracy or completeness of electronic copies of this plan sheet.

Caltrans now has a web site! To get to the web site, go to http://www.dot.ca.gov

Caltrans Metric

SAN FRANCISCO BAY

The following are review comments for this sheet

1. The removal of the light poles are not in this CCO.
   Remove all references to state furnished poles and detailing showing the poles are by others.
   The removal of the poles will take place in CCO #43.

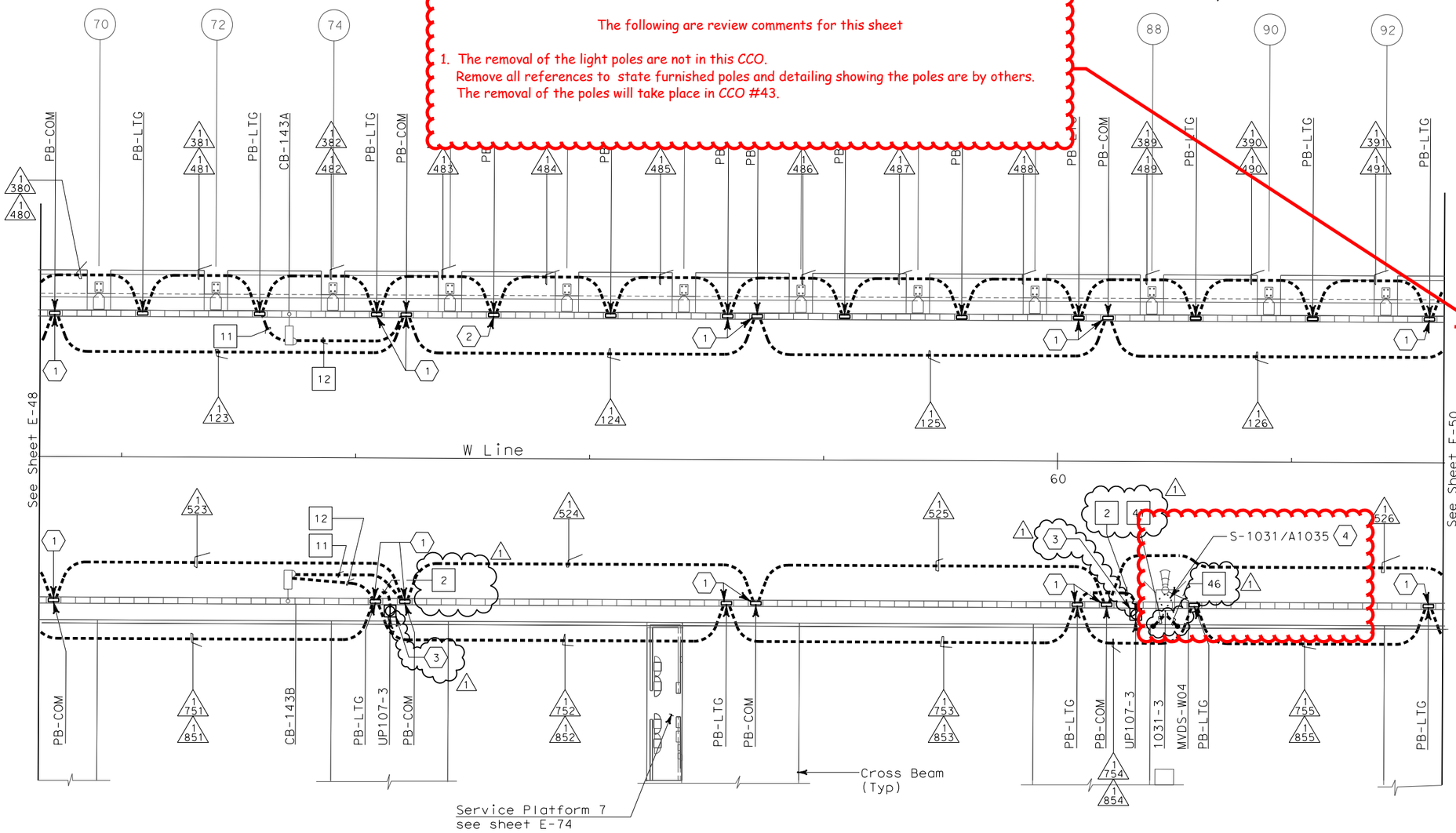

CONDUIT PLAN

SHEET NOTES:

1. Conduit from barrier pullbox or other equipment down into Girder, See sheet E-99.
2. For conduit to Suspend Lighting, See sheet E-229. Typ for all PB-LTG located on the north side of the roadway.
3. Roadway Barrier Receptacle, see Detail 1, sheet E-68.
4. Light pole, luminaires and lowering device are state furnished and installed by contractor.

NOTES:

1. References:
   - For typical details and locations of conduit connections to light poles, barrier outlet boxes, call boxes, overhead sign lighting, CCTV and MVDS, see E-66, E-67 and E-68.
   - TOS equipment is shown for conduit routing only. For typical details of TOS controller and devices, see sheet E-344 through E-357.
   - For types of pullboxes, splice boxes and enclosures, see sheet E-83.
   - For circuit and conduit/cable tray schedules, see sheets starting at E-401.
2. For Roadway Call Boxes refer to sheet E-396.
3. For Roadway Level Lighting Pole Schedules, see sheet E-82.
4. For Roadway Level Call Box Schedule, see sheet E-397.
5. For number of lighting fixtures (main tower lights), see lighting schedule sheets E-271 and E-272.
6. See sheets E-66 thru E-68 for conduit locations.

REGISTERED PROFESSIONAL ENGINEER — MAXWELL FUMIO TAKATA No. E 8651 Exp. 9/30/2008 ELECTRICAL — STATE OF CALIFORNIA

FOR REVISION ONLY

REQUEST FOR INFORMATION NOT ADDRESSED IN THIS CCO REMAIN IN FORCE

MARK	DATE	DESCRIPTIONS	BY	CH'D	CCO#
		REVISIONS			
1	02/19/08	ELECTRICAL MODIFICATIONS	MP EL	RR	42

CONTRACT CHANGE ORDER NO._____
SHEET _____ OF _____

THIS PLAN IS ACCURATE FOR ELECTRICAL WORK ONLY.

SAS SUPERSTRUCTURE ROADWAY WESTBOUND
LIGHTING AND ELECTRICAL SYSTEMS

SCALE 1:200

E-49

DESIGNED BY	CALCULATED/ CHECKED BY	DATE	REVISED BY	DATE REVISED
BEHZAD GOLEMOHAMMADI	FK IAH	8/02		8/02

DESIGN OVERSIGHT
STATE OF CALIFORNIA - DEPARTMENT OF TRANSPORTATION
Caltrans

LAST REVISION 00-00-00
DATE PLOTTED => 3/17/2008
TIME PLOTTED => 3:53:43 PM

FOR REDUCED PLANS ORIGINAL SCALE IS IN MILLIMETERS 0 20 40 60 80

DGN FILE =>T:\13103\MS\pse\SAS Struc\CCO\SAS CC042\04-0120f1_0120R01.dgn
USERNAME =>llorico

CU 04251

EA 0120F1

DIST	COUNTY	ROUTE	KILOMETER POST TOTAL PROJECT	SHEET No	TOTAL SHEETS
04	SF	80	13.2/13.9	121R1	1204

12/19/02
REGISTERED ELECTRICAL ENGINEER DATE

12-6-04
PLANS APPROVAL DATE

REGISTERED PROFESSIONAL ENGINEER — JENS ERLINGSSON No. 8249 Exp. 9/30/06 ELECTRICAL — STATE OF CALIFORNIA

PB POWER, Inc.
A Parsons Brinckerhoff Company
303 Second St., Suite 700N
San Francisco, CA 94107-1317

The State of California or its officers or agents shall not be responsible for the accuracy or completeness of electronic copies of this plan sheet.

Caltrans now has a web site! To get to the web site, go to http://www.dot.ca.gov

Caltrans Metric

SAN FRANCISCO BAY

The following are review comments for this sheet

1. The removal of the light poles are not in this CCO.
   Remove all references to state furnished poles and detailing showing the poles are by others.
   The removal of the poles will take place in CCO #43.

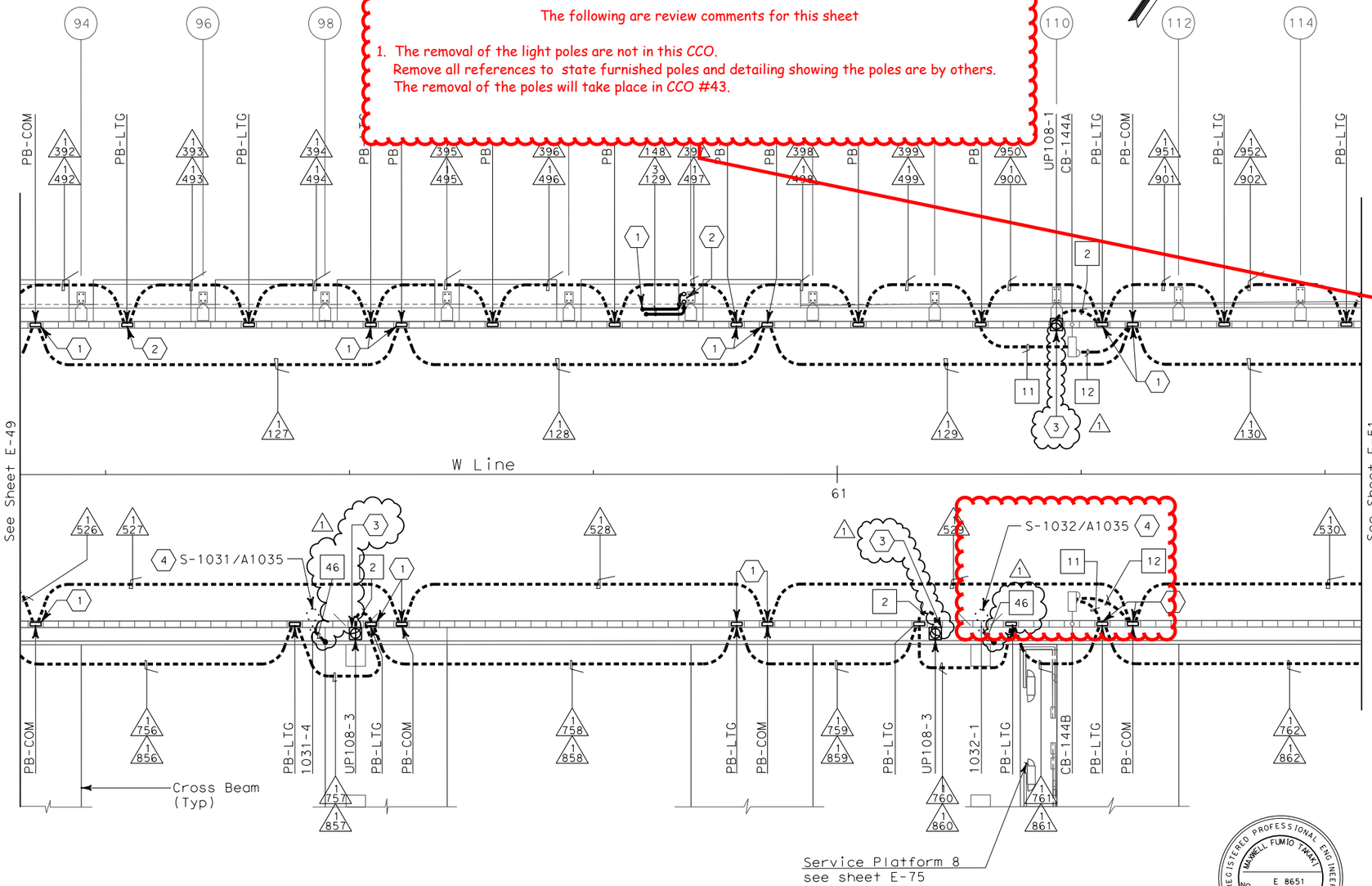

SHEET NOTES:

1. Conduit from barrier pullbox or other equipment down into Girder, See sheet E-100.
2. For conduit to Suspend Lighting, See sheet E-230.
3. Roadway Barrier Receptacle, see Detail 1, sheet E-68.
4. Light pole, luminaires and lowering device are state furnished and installed by contractor.

NOTES:

1. References:
   - For typical details and locations of conduit connections to light poles, barrier outlet boxes, call boxes, overhead sign lighting, CCTV and MVDS, see sheets E-66, E-67 and E-68.
   - TOS equipment is shown for conduit routing only. For typical details of TOS controller and devices, see sheets E-344 through E-357.
   - For types of pullboxes, splice boxes and enclosures, see sheet E-83.
   - For circuit and conduit/cable tray schedules, see sheets starting at E-401.
2. For Roadway Call Boxes refer to sheet E-396.
3. For Roadway Level Lighting Pole Schedules, see sheet E-82.
4. For Roadway Level Call Box Schedule, see sheet E-397.
5. For number of lighting fixtures (main tower lights), see lighting schedule sheets E-271 and E-272.

REGISTERED PROFESSIONAL ENGINEER — MAXWELL FUMIO TAKATA No. E 8651 Exp. 9/30/2008 ELECTRICAL — STATE OF CALIFORNIA

FOR REVISION ONLY

REQUEST FOR INFORMATION NOT ADDRESSED IN THIS CCO REMAIN IN FORCE

MARK	DATE	DESCRIPTIONS	BY	CH'D	CCO#
		REVISIONS			
1	02/19/08	ELECTRICAL MODIFICATIONS	MP EL	RR	42

CONTRACT CHANGE ORDER NO. _____
SHEET _____ OF _____

CONDUIT PLAN

SAS SUPERSTRUCTURE ROADWAY WESTBOUND
LIGHTING AND ELECTRICAL SYSTEMS

SCALE 1:200

E-50

THIS PLAN IS ACCURATE FOR ELECTRICAL WORK ONLY.

CALCULATED/ DESIGNED BY	CHECKED BY	DESIGN OVERSIGHT
FK	IAH	BEHZAD GOLEMOHAMMADI

DATE	REVISED BY
8/02	DATE REVISED

STATE OF CALIFORNIA - DEPARTMENT OF TRANSPORTATION
Caltrans

FOR REDUCED PLANS ORIGINAL SCALE IS IN MILLIMETERS 0 20 40 60 80

DGN FILE =>T:\13103\MS\pse\SAS Struc\CCO\SAS CC042\04-0120f1_0121R01.dgn
USERNAME =>llorico

CU 04251

EA 0120F1

LAST REVISION 00-00-00
DATE PLOTTED => 3/17/2008
TIME PLOTTED => 3:54:27 PM

DIST	COUNTY	ROUTE	KILOMETER POST TOTAL PROJECT	SHEET No	TOTAL SHEETS
04	SF	80	13.2/13.9	122R1	1204

REGISTERED ELECTRICAL ENGINEER — 12/19/02 DATE

12-6-04
PLANS APPROVAL DATE

REGISTERED PROFESSIONAL ENGINEER — JENS ERLINGSSON No. 8249 Exp. 9/30/06 ELECTRICAL — STATE OF CALIFORNIA

PB POWER, Inc.
A Parsons Brinckerhoff Company
303 Second St., Suite 700N
San Francisco, CA 94107-1317

The State of California or its officers or agents shall not be responsible for the accuracy or completeness of electronic copies of this plan sheet.

Caltrans now has a web site! To get to the web site, go to http://www.dot.ca.gov

Caltrans Metric

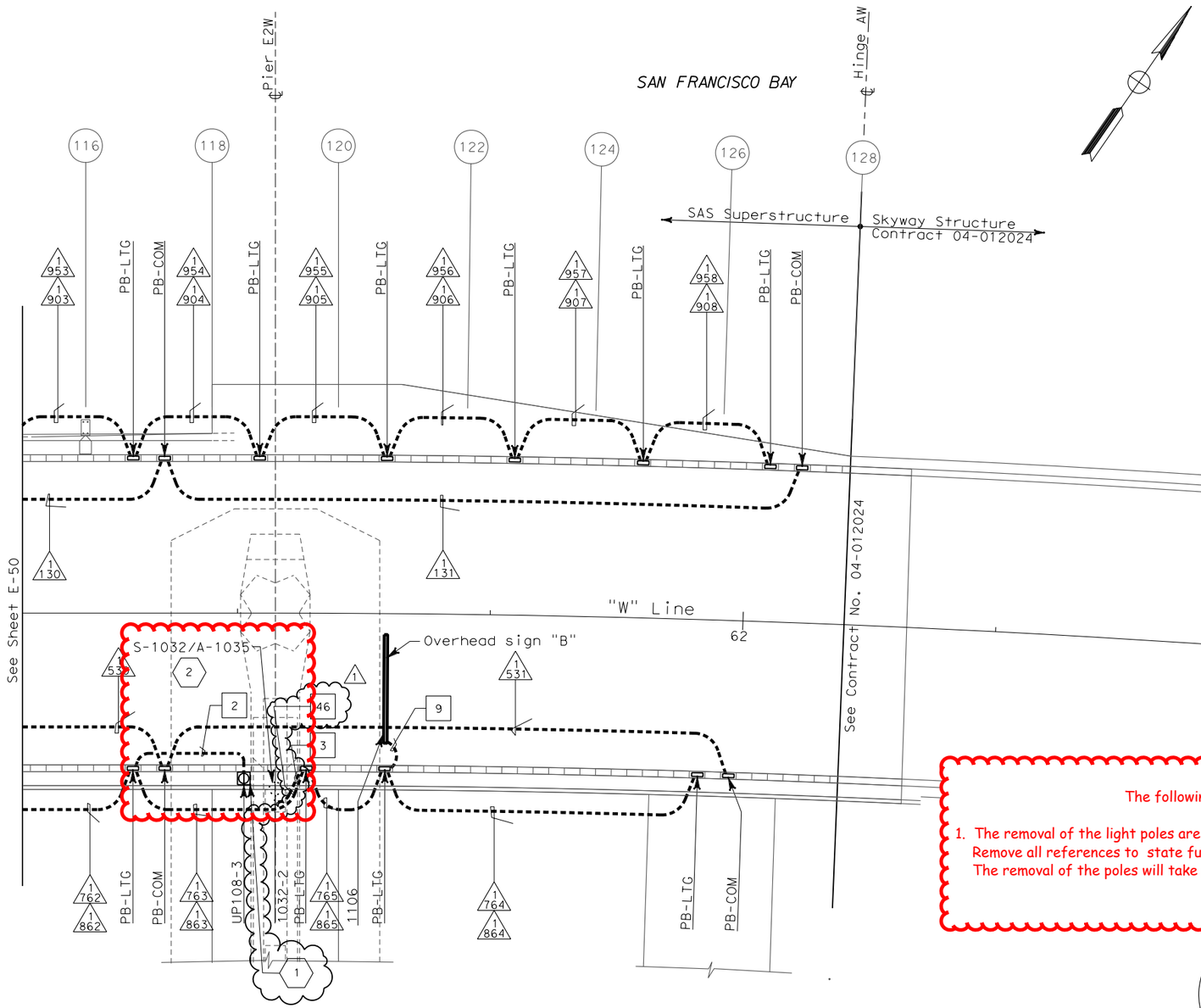

CONDUIT PLAN

SHEET NOTES:

1 (1) Roadway Barrier Receptacle, see Detail 1, sheet E-68.

(2) Light pole, luminaires and lowering device are state furnished and installed by contractor.

NOTES:

1. References:
   - For typical details and locations of conduit connections to light poles, barrier outlet boxes, call boxes, overhead sign lighting, CCTV and MVDS, see sheets E-66, E-67 and E-68.
   - TOS equipment is shown for conduit routing only. For typical details of TOS controller and devices, see sheets E-344 through E-357.
   - For types of pullboxes, splice boxes and enclosures, see sheet E-83.
   - For circuit and conduit/cable tray schedules, see sheets starting at E-401.
2. For roadway level lighting pole schedules, see sheet E-82.

The following are review comments for this sheet

1. The removal of the light poles are not in this CCO.
   Remove all references to state furnished poles and detailing showing the poles are by others.
   The removal of the poles will take place in CCO #43.

REGISTERED PROFESSIONAL ENGINEER — MARRELL FUMIO TAKAKI No. E 8651 Exp. 9/30/2008 ELECTRICAL — STATE OF CALIFORNIA

FOR REVISION ONLY

REQUEST FOR INFORMATION NOT ADDRESSED IN THIS CCO REMAIN IN FORCE

MARK	DATE	DESCRIPTIONS	BY	CH'D	CCO#
		REVISIONS			
1	02/19/08	ELECTRICAL MODIFICATIONS	MP EL	RR	42

CONTRACT CHANGE ORDER NO._____
SHEET _____ OF _____

SAS SUPERSTRUCTURE ROADWAY WESTBOUND
LIGHTING AND ELECTRICAL SYSTEMS

SCALE 1:200

THIS PLAN IS ACCURATE FOR ELECTRICAL WORK ONLY.

E-51

DESIGN OVERSIGHT	CALCULATED/ DESIGNED BY	CHECKED BY	DATE	REVISED BY
BEHZAD GOLEMOHAMMADI	FK	IAH	8/02	DATE REVISED

STATE OF CALIFORNIA - DEPARTMENT OF TRANSPORTATION — Caltrans

FOR REDUCED PLANS ORIGINAL SCALE IS IN MILLIMETERS 0 20 40 60 80

DGN FILE =>T:\13103\MS\pse\SAS Struc\CCO\SAS CC042\04-0120f1_0122R01.dgn
USERNAME =>llorico

CU 04251 EA 0120F1

LAST REVISION 00-00-00 DATE PLOTTED => 3/17/2008 TIME PLOTTED => 3:54:48 PM

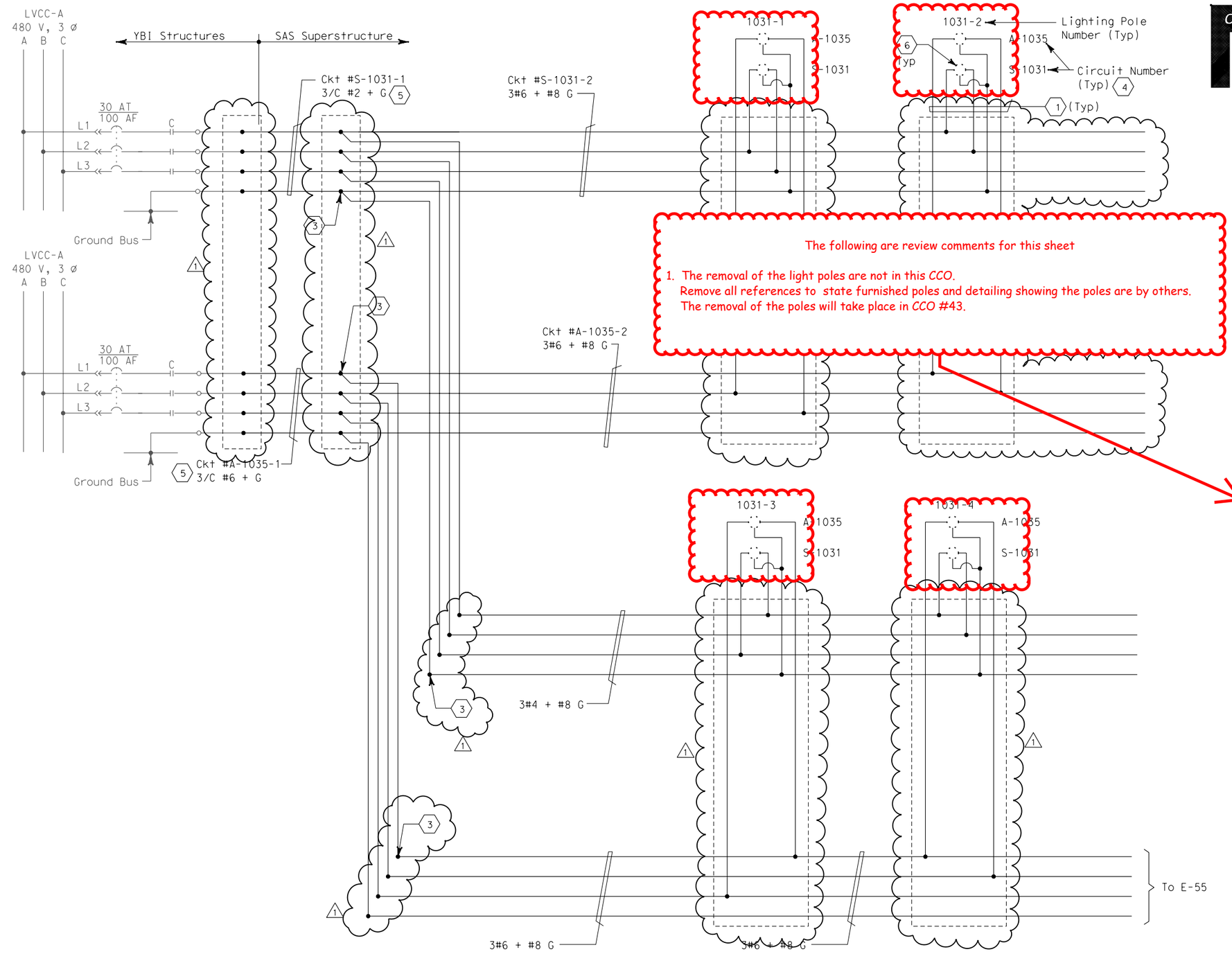

The following are review comments for this sheet

1. The removal of the light poles are not in this CCO.
   Remove all references to state furnished poles and detailing showing the poles are by others.
   The removal of the poles will take place in CCO #43.

SHEET NOTES:

1. 4#10 + #10 G single conductors.
2. Deleted.
3. Conductors spliced inside junction box PB-2A located inside girder.
4. For SAS Superstructure roadway westbound lighting schedule, see sheet E-82.
5. The Contractor shall extend and coil 5 meters of cable in manhole 25. All cables shall be tagged with circuit numbers as shown. For location of manhole 25, see sheet E-11.
6. Light pole, luminaires and lowering device are state furnished and installed by contractor.

NOTES:

1. References:
   - For pull box schedule, see sheet E-83.
   - For circuit and conduit/cable tray schedules, see sheets starting at E-401.

REQUEST FOR INFORMATION NOT ADDRESSED IN THIS CCO REMAIN IN FORCE					
MARK	DATE	DESCRIPTIONS	BY	CH'D	CCO#
1	02/19/08	ELECTRICAL MODIFICATIONS	MP EL	RR	42
REVISIONS					

CONTRACT CHANGE ORDER NO._____
SHEET _____ OF _____

FOR REVISION ONLY

DETAILS
SAS SUPERSTRUCTURE ROADWAY WESTBOUND 480 V ROADWAY LIGHTING WIRING DIAGRAM

NO SCALE

E-54

DIST	COUNTY	ROUTE	KILOMETER POST TOTAL PROJECT	SHEET No	TOTAL SHEETS
04	SF	80	13.2/13.9	123R1	1204

REGISTERED ELECTRICAL ENGINEER — 12/19/02 DATE

12-6-04
PLANS APPROVAL DATE

REGISTERED PROFESSIONAL ENGINEER — JENS ERLINGSSON No. 8249 Exp. 9/30/06 ELECTRICAL — STATE OF CALIFORNIA

PB POWER, Inc.
A Parsons Brinckerhoff Company
303 Second St., Suite 700N
San Francisco, CA 94107-1317

The State of California or its officers or agents shall not be responsible for the accuracy or completeness of electronic copies of this plan sheet.

Caltrans now has a web site! To get to the web site, go to http://www.dot.ca.gov

REGISTERED PROFESSIONAL ENGINEER — MARNELL FUMIO TAKATA No. E 8651 Exp. 9/30/2008 ELECTRICAL — STATE OF CALIFORNIA

CALCULATED/ DESIGNED BY	CHECKED BY	DATE	REVISED BY	DATE REVISED
JP	JE	08/01		12/01

DESIGN OVERSIGHT — BEHZAD GOLEMOHAMMADI

STATE OF CALIFORNIA - DEPARTMENT OF TRANSPORTATION — Caltrans

DATE PLOTTED => 3/17/2008
TIME PLOTTED => 4:28:21 PM
LAST REVISION 00-00-00

FOR REDUCED PLANS ORIGINAL SCALE IS IN MILLIMETERS 0 20 40 60 80

DGN FILE =>T:\13103\MS\pse\SAS Struc\CCO\SAS CCO42\04-0120f1_0123R01.dgn
USERNAME =>llorico

CU 04251

EA 0120F1

DIST	COUNTY	ROUTE	KILOMETER POST TOTAL PROJECT	SHEET No	TOTAL SHEETS
04	SF	80	13.2/13.9	124R1	1204

12/19/02
REGISTERED ELECTRICAL ENGINEER DATE

12-6-04
PLANS APPROVAL DATE

REGISTERED PROFESSIONAL ENGINEER — JENS ERLINGSSON — No. 8249 — Exp. 9/30/06 ELECTRICAL — STATE OF CALIFORNIA

PB POWER, Inc.
A Parsons Brinckerhoff Company
303 Second St., Suite 700N
San Francisco, CA 94107-1317

The State of California or its officers or agents shall not be responsible for the accuracy or completeness of electronic copies of this plan sheet.

Caltrans now has a web site! To get to the web site, go to http://www.dot.ca.gov

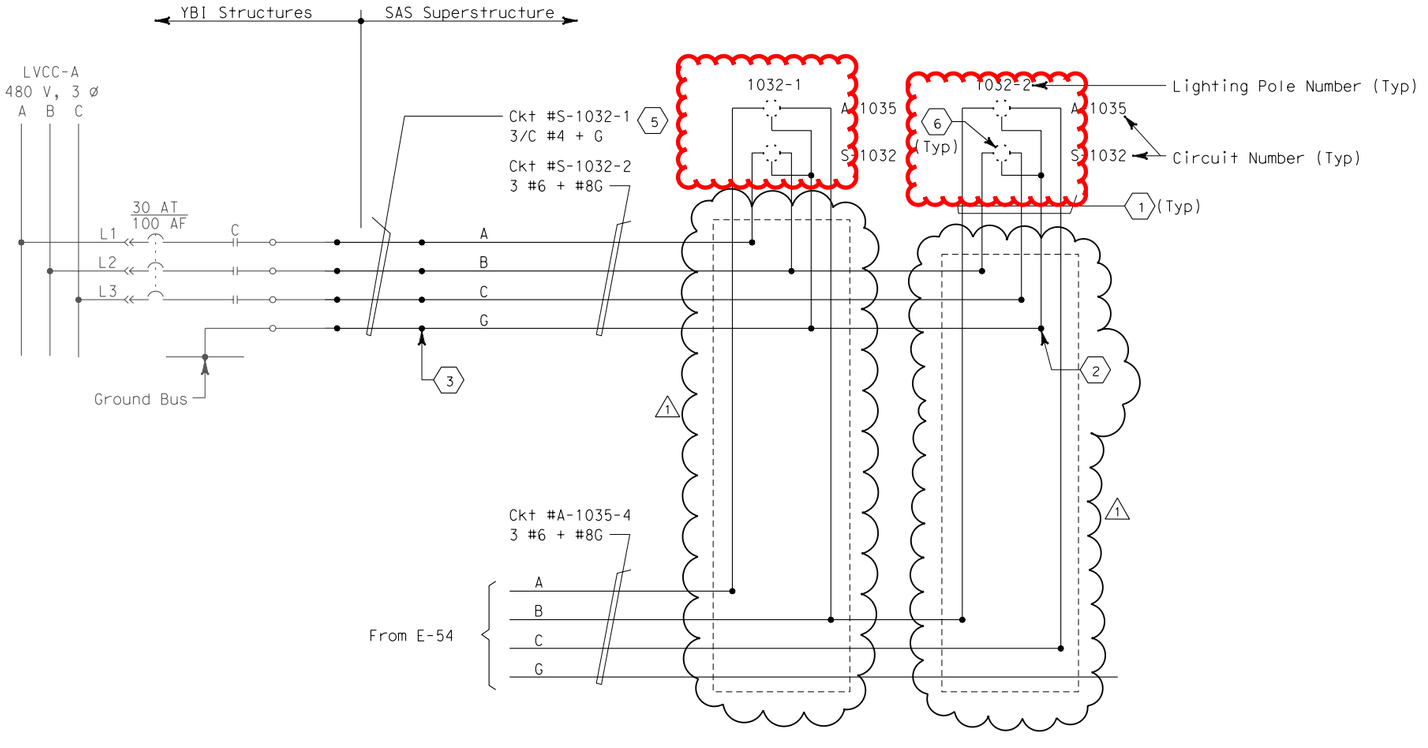

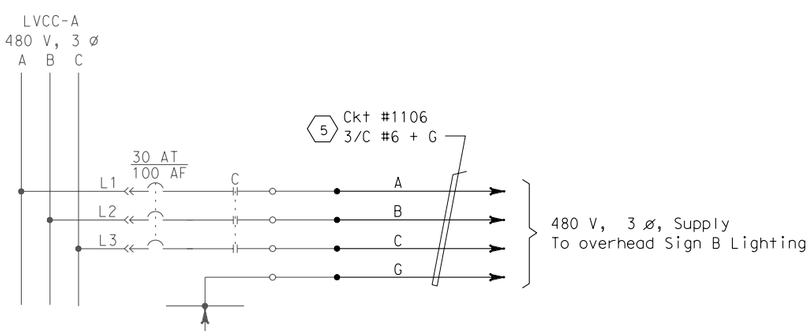

480 V OVERHEAD SIGN

SHEET NOTES:

1. 4#10 + #10 G single conductors.
2. Conductors spliced inside pull box PB-LTG. (Pole #1032-2 only).
3. Conductors spliced inside junction box PB-2A located inside girder.
4. For SAS superstructure roadway westbound lighting schedule, see sheet E-82.
5. The Contractor shall extend and coil 5 meters of cable in manhole 25. All cables shall be tagged with circuit numbers as shown. For location of manhole 25, see sheet E-11.
6. Light pole, luminaires and lowering device are state furnished and installed by contractor.

NOTES:

1. References:
   - For pull box schedule, see sheet E-83.
   - For circuit and conduit/cable tray schedules, see sheets starting at E-401.
   - For single line diagram, see sheets E-29 through E-34.

The following are review comments for this sheet

1. The removal of the light poles are not in this CCO.
   Remove all references to state furnished poles and detailing showing the poles are by others.
   The removal of the poles will take place in CCO #43.

REGISTERED PROFESSIONAL ENGINEER — MANUELL FUMIO TAKATA — No. E 8651 — Exp. 9/30/2008 ELECTRICAL — STATE OF CALIFORNIA

FOR REVISION ONLY

REQUEST FOR INFORMATION NOT ADDRESSED IN THIS CCO REMAIN IN FORCE

MARK	DATE	DESCRIPTIONS	BY	CH'D	CCO#
		REVISIONS			
1	02/19/08	ELECTRICAL MODIFICATIONS	MP EL	RR	42

CONTRACT CHANGE ORDER NO._____
SHEET _____ OF _____

DETAILS
SAS SUPERSTRUCTURE ROADWAY WESTBOUND
480 V ROADWAY LIGHTING WIRING DIAGRAM
NO SCALE

E-55

CALCULATED/ DESIGNED BY	CHECKED BY	DATE	REVISED BY	DATE REVISED
JP	JE	08/01		12/01

DESIGN OVERSIGHT — BEHZAD GOLEMOHAMMADI

STATE OF CALIFORNIA - DEPARTMENT OF TRANSPORTATION — Caltrans

FOR REDUCED PLANS ORIGINAL SCALE IS IN MILLIMETERS 0 20 40 60 80

DGN FILE =>T:\13103\MS\pse\SAS Struc\CCO\SAS CCO42\04-0120f1_0124R01.dgn
USERNAME =>llorico

CU 04251 | EA 0120F1

DATE PLOTTED => 3/17/2008
TIME PLOTTED => 4:29:20 PM

LAST REVISION 00-00-00

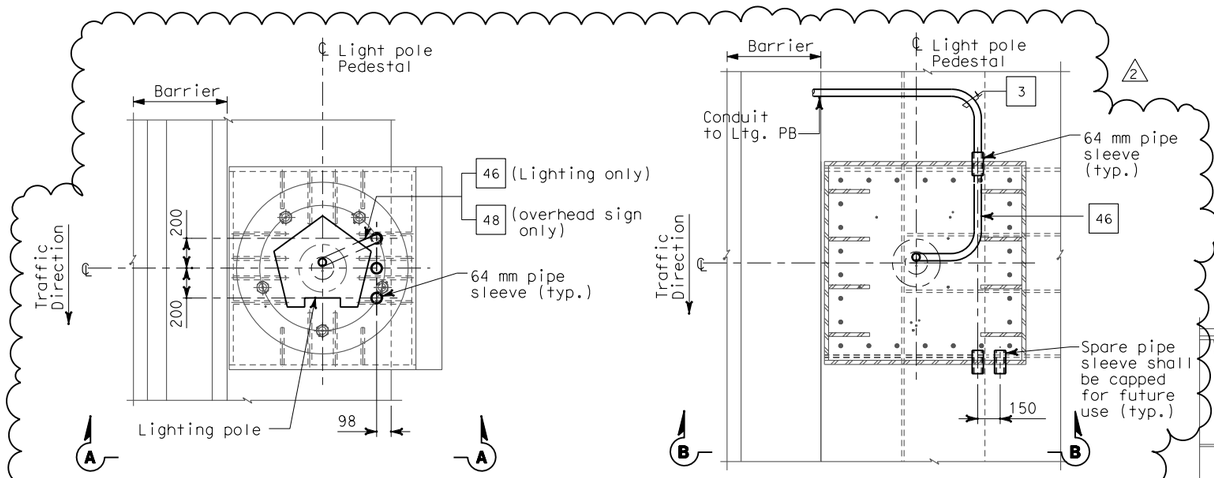

PLAN

CONDUIT STUB-UP PLAN FOR ROADWAY LIGHTING ON A METAL BASE (SIMILAR FOR OVERHEAD SIGN ON A METAL BASE EXCEPT AS NOTED)
SCALE 1:20

PLAN

CONDUIT STUB-UP PLAN FOR ROADWAY LIGHTING ON A METAL BASE AT PIER E2 ONLY
SCALE 1:20

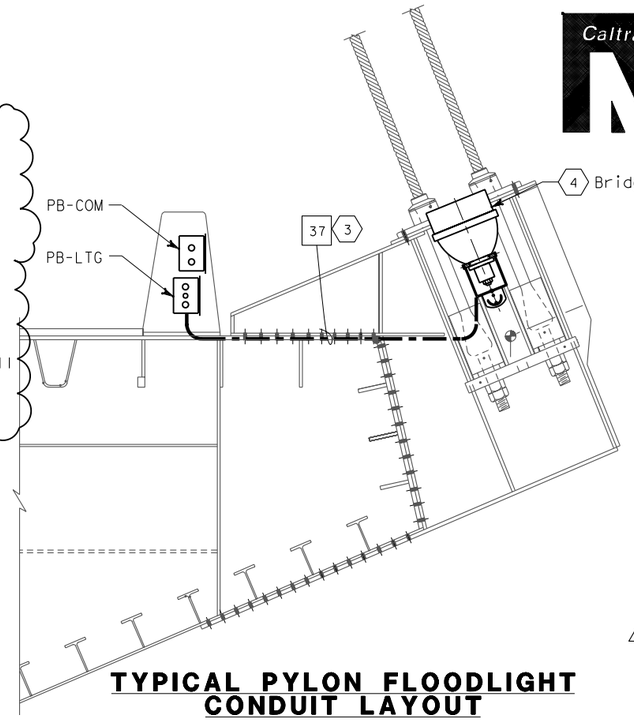

TYPICAL PYLON FLOODLIGHT CONDUIT LAYOUT

SCALE 1:20

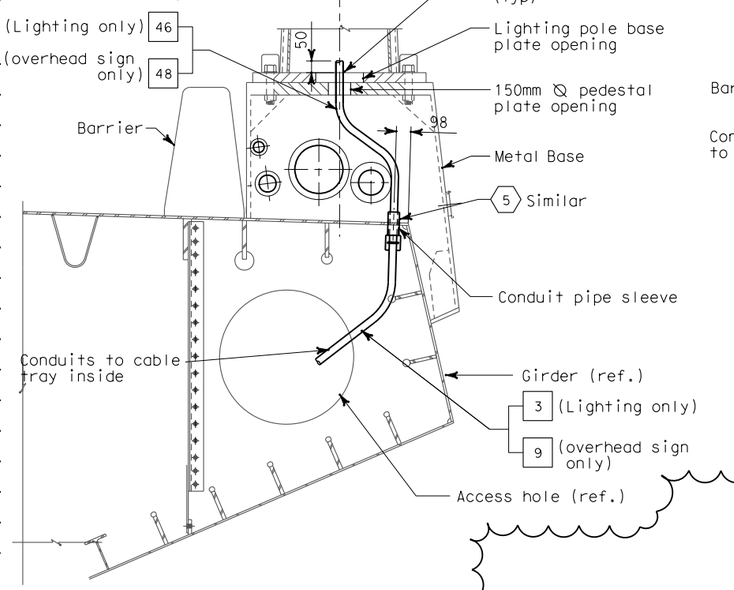

SECTION A-A

LIGHT POLE METAL PEDESTAL CONDUIT TYPICAL INSTALLATION
SCALE 1:20

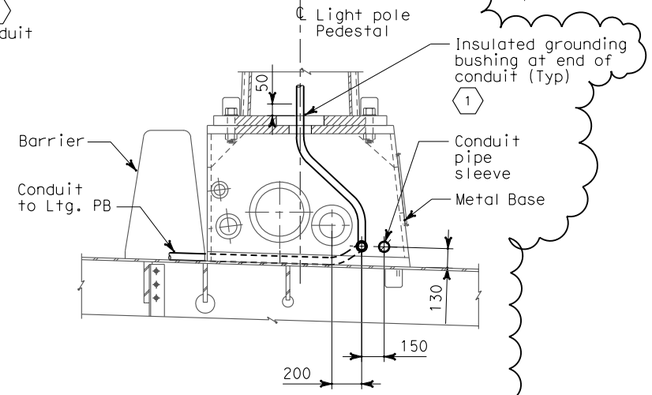

SECTION B-B

SCALE 1:20

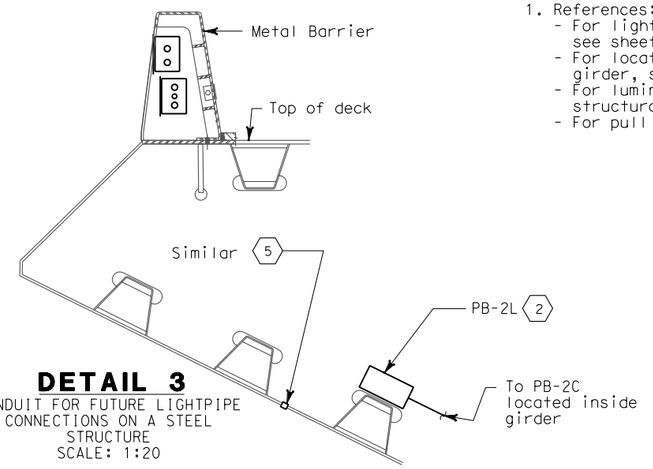

DETAIL 3

CONDUIT FOR FUTURE LIGHTPIPE CONNECTIONS ON A STEEL STRUCTURE
SCALE: 1:20

SHEET NOTES:

1. Bond grounding bushing to ground lug of lighting pole with #6 bare copper wire.
2. Conduits for future light pipe shall continue from this pull box.
3. Conduit shall be clear of all piping and pipe sleeves. Route conduit on top of deck plate, outside of girder box.
4. For pylon floodlighting layout, see sheets E-47 & E-48.
5. See Utility Detail No. 1 (Sheet No. 965 of 1204) for conduit penetration through girder plate and lighting pole metal base. The Contractor shall install sealant between the sleeve and conduit for future light pipe, plug and cap sleeve to prevent water or moisture from passing inside the sleeve.

NOTES:

1. References:
   - For lighting pole schedule, see sheet E-82.
   - For location of pull boxes inside girder, see sheets E-96 thru E-101.
   - For luminaire support details, see structural sheets.
   - For pull box schedule, see sheet E-83.

DIST	COUNTY	ROUTE	KILOMETER POST TOTAL PROJECT	SHEET No	TOTAL SHEETS
04	SF	80	13.2/13.9	132R2	1204

Jens Erlingsson 12/19/02
REGISTERED ELECTRICAL ENGINEER DATE

12-6-04
PLANS APPROVAL DATE

REGISTERED PROFESSIONAL ENGINEER — JENS ERLINGSSON No. 8249 Exp. 9/30/06 ELECTRICAL — STATE OF CALIFORNIA

PB POWER, Inc.
A Parsons Brinckerhoff Company
303 Second St., Suite 700N
San Francisco, CA 94107-1317

The State of California or its officers or agents shall not be responsible for the accuracy or completeness of electronic copies of this plan sheet.

Caltrans now has a web site! To get to the web site, go to http://www.dot.ca.gov

REGISTERED PROFESSIONAL ENGINEER — MARRELL FUMIO TAKATA No. E 8651 Exp. 9/30/2008 ELECTRICAL — STATE OF CALIFORNIA

FOR REVISION ONLY

REQUEST FOR INFORMATION NOT ADDRESSED IN THIS CCO REMAIN IN FORCE					
2	02/19/08	ELECTRICAL MODIFICATIONS	MP EL RG	RR	42
1	10/16/06	REVISED SHEET NOTES	LR	MG	11
MARK	DATE	DESCRIPTIONS REVISIONS	BY	CH'D	CCO#

CONTRACT CHANGE ORDER NO. _____
SHEET _____ OF _____

DETAILS
SAS SUPERSTRUCTURE ROADWAY WESTBOUND CONDUIT LOCATIONS

SCALE AS NOTED

E-67

CALCULATED/ DESIGNED BY	KG
CHECKED BY	AB

MARK	DATE	REVISED BY
2	10/01	II/01
1		DATE REVISED

DESIGN OVERSIGHT — BEHZAD GOLEMOHAMMADI

STATE OF CALIFORNIA - DEPARTMENT OF TRANSPORTATION — Caltrans

LAST REVISION 00-00-00 | DATE PLOTTED => 3/17/2008 | TIME PLOTTED => 4:30:02 PM

FOR REDUCED PLANS ORIGINAL SCALE IS IN MILLIMETERS 0 20 40 60 80

DGN FILE =>T:\13103\MS\pse\SAS Struc\CCO\SAS CC042\04-0120f1_0132R02.dgn
USERNAME =>llorico

CU 04251 | EA 0120F1

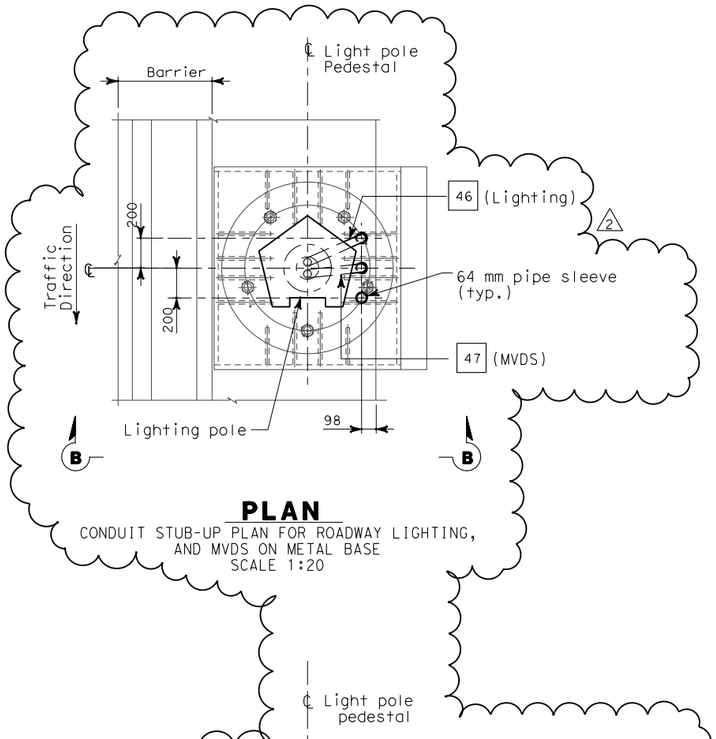

PLAN

CONDUIT STUB-UP PLAN FOR ROADWAY LIGHTING, AND MVDS ON METAL BASE
SCALE 1:20

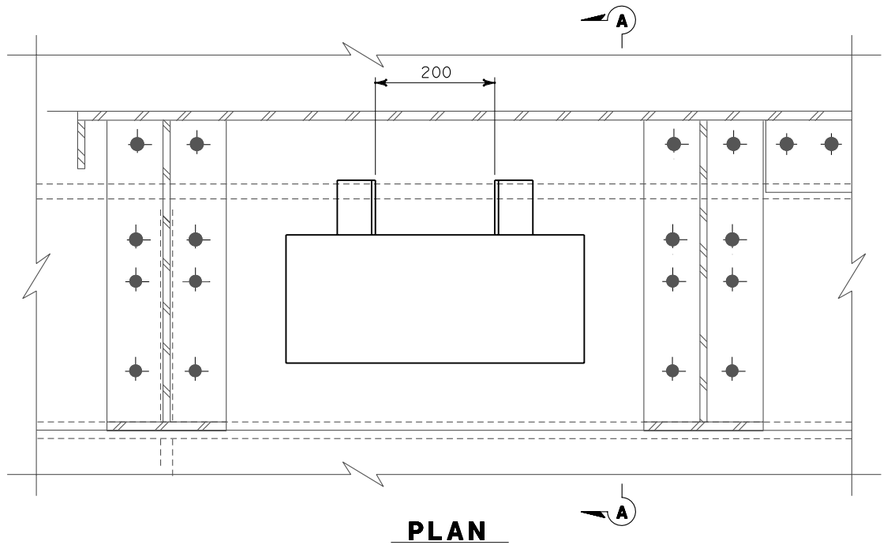

PLAN

PULL BOX IN STEEL BARRIER
SCALE 1:5

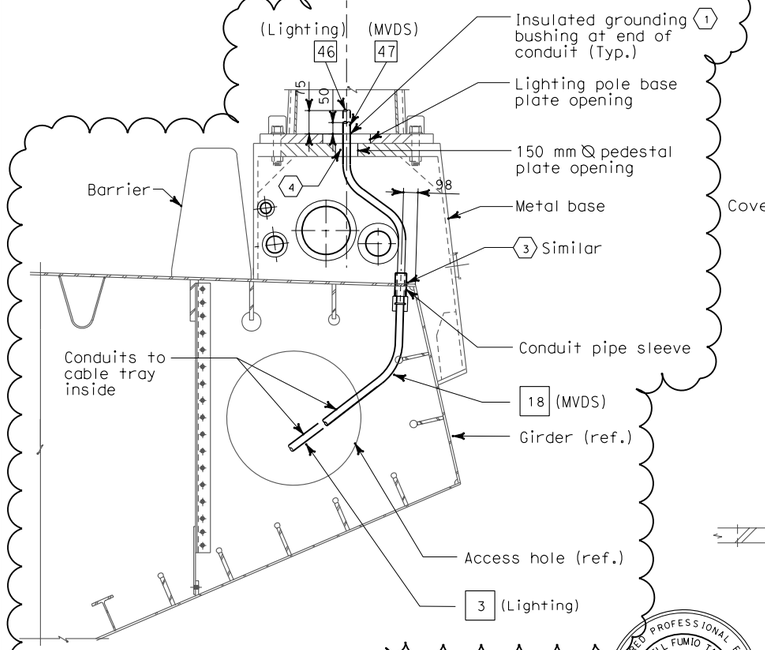

SECTION B-B

SCALE 1:20

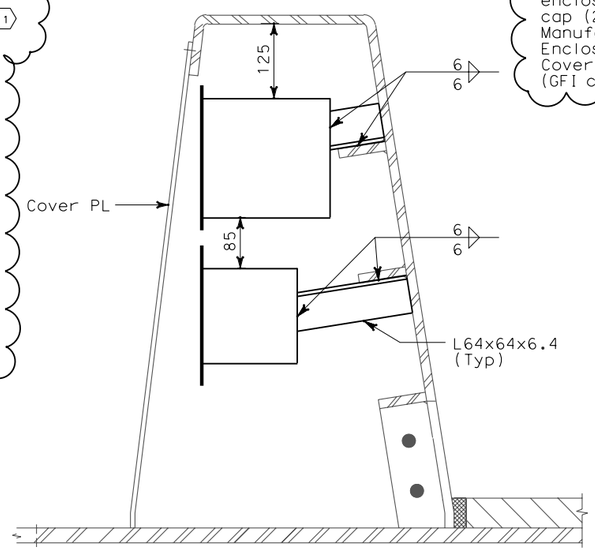

SECTION A-A

SCALE 1:5

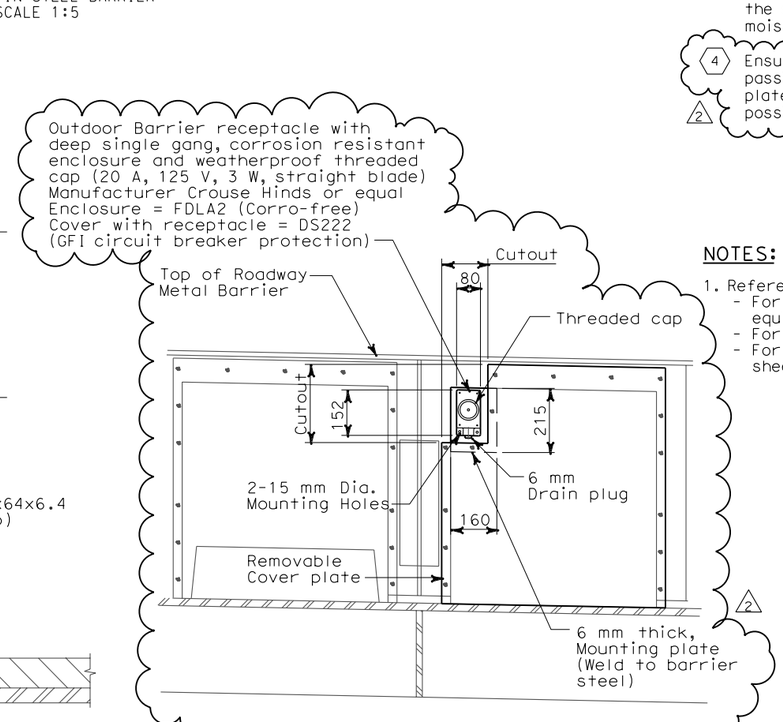

DETAIL 1

(TYPICAL ROADWAY BARRIER RECEPTACLE LOCATION)
SCALE: 1:10

SHEET NOTES:

1. Bond grounding bushing to ground lug of lighting pole or overhead sign post with #6 bare copper wire.
2. (2) Deleted
3. See Utility Detail No. 1 (Sheet No. 965 of 1204) for conduit penetration through girder plate and lighting pole metal base. The Contractor shall install sealant between the sleeve and conduit to prevent water or moisture from passing inside the sleeve.
4. Ensure that the maximum of three conduits passing through the 150 mm ⌀ pedestal plate opening are separated as much as possible from each other.

NOTES:

1. References:
   - For installation and typical details of TOS equipment, see sheets E-344 thru E-357.
   - For pull box schedule, see sheet E-83.
   - For TOS field element locations, see sheet E-341.

MARK	DATE	REVISIONS DESCRIPTIONS	BY	CH'D	CCO#
2	02/19/08	ELECTRICAL MODIFICATIONS	MP EL RG	RR	42
1	10/16/06	REVISED SHEET NOTES	LR	MG	11

REQUEST FOR INFORMATION NOT ADDRESSED IN THIS CCO REMAIN IN FORCE

CONTRACT CHANGE ORDER NO._____
SHEET_____ OF _____

REGISTERED ELECTRICAL ENGINEER
FOR REVISION ONLY

DIST	COUNTY	ROUTE	KILOMETER POST TOTAL PROJECT	SHEET No	TOTAL SHEETS
04	SF	80	13.2/13.9	133R2	1204

REGISTERED ELECTRICAL ENGINEER 12/19/02 DATE

12-6-04
PLANS APPROVAL DATE

REGISTERED PROFESSIONAL ENGINEER — JENS ERLINGSSON No. 8249 Exp. 9/30/06 ELECTRICAL — STATE OF CALIFORNIA

PB POWER, Inc.
A Parsons Brinckerhoff Company
303 Second St., Suite 700N
San Francisco, CA 94107-1317

The State of California or its officers or agents shall not be responsible for the accuracy or completeness of electronic copies of this plan sheet.

Caltrans now has a web site! To get to the web site, go to http://www.dot.ca.gov

REGISTERED PROFESSIONAL ENGINEER — MARNELL FUMIO TAKAKI No. E 8651 Exp. 9/30/2008 ELECTRICAL — STATE OF CALIFORNIA

DETAILS
SAS SUPERSTRUCTURE ROADWAY WESTBOUND CONDUIT LOCATIONS

SCALE AS NOTED

E-68

CALCULATED/ DESIGNED BY	CHECKED BY
KG	AB

MARK	DATE	REVISED BY	DATE REVISED
1	10/01		11/01

DESIGN OVERSIGHT — BEHZAD GOLEMOHAMMADI

STATE OF CALIFORNIA - DEPARTMENT OF TRANSPORTATION — Caltrans

LAST REVISION 00-00-00 — DATE PLOTTED => 3/17/2008 TIME PLOTTED => 4:30:26 PM

FOR REDUCED PLANS ORIGINAL SCALE IS IN MILLIMETERS 0 20 40 60 80

DGN FILE =>T:\13103\MS\pse\SAS Struc\CCO\SAS CC042\04-0120f1_0133R02.dgn
USERNAME =>llorico

CU 04251

EA 0120F1

PIER 1 TOWER LIGHTS SCHEDULE (ROADWAY LEVEL)

Circuit Number	Station	Location: Roadway side	Location: Suspend at Panel Point	Mounting	Ltg. Fixture Type	Number/ Wattage	Remarks
			PYLON LIGHTING				
A-3009	57+43	South	PP-35/36	Bridge deck	MAT-1B-D	2-1000 W	with Remote Ballast
A-3009	57+45	South	PP-36	Bridge deck	MAT-1C-D	1-1000 W	with Remote Ballast
A-3009	57+51	South	PP-36/37	Bridge deck	MAT-1A-D	2-1000 W	with Remote Ballast
A-3009	57+64	South	PP-39	Bridge deck	MAT-3-D	2-250 W	with Remote Ballast
A-3009	57+69	South	PP-40	Crossbeam	MAT-3-RC	2-250 W	with Remote Ballast
A-3009	57+75.5	North	West of PP-42	Bridge deck	MAT-1A-D	1-1000 W	with Remote Ballast
A-3010	58+14	South	PP-48/49	Bridge deck	MAT-1B-D	2-1000 W	with Remote Ballast
A-3010	58+12	South	PP-48	Bridge deck	MAT-1C-D	1-1000 W	with Remote Ballast
A-3010	58+06	South	PP-47/48	Bridge deck	MAT-1A-D	2-1000 W	with Remote Ballast
A-3010	57+93	South	PP-45	Bridge deck	MAT-3-D	2-250 W	with Remote Ballast
A-3010	57+88	South	PP-44	Crossbeam	MAT-3-RC	2-250 W	with Remote Ballast
A-3010	57+80.5	North	East of PP-42	Bridge deck	MAT-1A-D	1-1000 W	with Remote Ballast

LIGHTING POLE SCHEDULE

Circuit Number	Pole Number	Station	Location: Roadway side	Location: Suspend at Panel Point	Mounting Height (M)	Ltg. Fixture Type	Number/ Wattage	Remarks (Mounting Provisions)
S-1031	1031-1	55+98	South	-	20	MSR-2B-L	3-400 W	Pole mounted
A-1035						MAM-3	1-250 W	
S-1031	1031-2	56+38	South	-	20	MSR-2B-L	3-400 W	Pole mounted
A-1035						MAM-3	1-250 W	
S-1031	1031-3	60+08	South	-	20	MSR-2-L	2-400 W	Pole mounted
S-1031						MSR-2B-L	3-400 W	
A-1035						MAM-3	1-250 W	
S-1031	1031-4	60+58	South	-	20	MSR-2-L	2-400 W	Pole mounted
S-1031						MSR-2B-L	2-400 W	
A-1035						MAM-3	1-250 W	
S-1032	1032-1	61+10	South	-	20	MSR-2-L	2-400 W	Pole mounted
S-1032						MSR-2B-L	2-400 W	
A-1035						MAM-3	1-250 W	
S-1032	1032-2	61+63	South	-	20	MSR-2-L	2-400 W	Pole mounted
S-1032						MSR-2B-L	2-400 W	
A-1035						MAM-3	1-250 W	

LIGHTING FIXTURE TYPE DESIGNATION

Example: MSR-2B-C (See Special provisions for additional information)
MSR = SAS Safety light
-2B = 400 Watts
-C Beam Angles

Location (Letter)		Function (Letter)		Application (Letter)		Number/ Lamp Wattage		Beam Angles (Letter)		Mounting Type (Letter)	
M	SAS	A	Aesthetic light	D	Downward flood light	1	1000 W	A		C	Cable
		S	Safety light	U	Upward flood light	2	400 W	B		D	Roadway deck
				R	Roadway light	3	250 W	C		PB	Pier Base/ Pole mount
				T	Pylon flood light	4	175 W			RC	Roadway at Cross beam
				M	Marker light	5	100 W			P	Pole mounted without lower/raiser
				P	Pylon marker light	6	50 W			L	Pole mounted with lower/raiser
				B	Bike path light						
				V	Belvedere light						
				L	Light pipe						

SHEET NOTE:

(1) 20 meter light poles, luminaires and lowering devices shall be state furnished and installed by the contractor.

NOTES:

1. For Roadway Level Lighting Wiring Diagrams see sheets E-54 thru E-55.
2. For Roadway Level Lighting Conduit Plan see sheets E-46 thru E-51.
3. For type of Roadway poles. Refer to Sheets E-85 thru E-89.

The following are review comments for this sheet

1. The removal of the light poles are not in this CCO.
   Remove all references to state furnished poles and detailing showing the poles are by others.
   The removal of the poles will take place in CCO #43.

FOR REVISION ONLY

REQUEST FOR INFORMATION NOT ADDRESSED IN THIS CCO REMAIN IN FORCE						
MARK	DATE	REVISIONS	BY	CH'D	CCO#	
1	02/19/08	ELECTRICAL MODIFICATIONS	MP EL	RR	42	

CONTRACT CHANGE ORDER NO._____
SHEET _____ OF _____

DIST	COUNTY	ROUTE	KILOMETER POST TOTAL PROJECT	SHEET No	TOTAL SHEETS
04	SF	80	13.2/13.9	141R1	1204

REGISTERED ELECTRICAL ENGINEER — 12/19/02 DATE
12-6-04
PLANS APPROVAL DATE

REGISTERED PROFESSIONAL ENGINEER — JENS ERLINGSSON No. 8249 Exp. 9/30/06 ELECTRICAL — STATE OF CALIFORNIA

PB POWER, Inc.
A Parsons Brinckerhoff Company
303 Second St., Suite 700N
San Francisco, CA 94107-1317

The State of California or its officers or agents shall not be responsible for the accuracy or completeness of electronic copies of this plan sheet.

Caltrans now has a web site! To get to the web site, go to http://www.dot.ca.gov

DETAILS
SAS SUPERSTRUCTURE ROADWAY WESTBOUND LIGHTING SCHEDULES

E-82

STATE OF CALIFORNIA - DEPARTMENT OF TRANSPORTATION
DESIGN OVERSIGHT: BEHZAD GOLEMOHAMMADI
CALCULATED/ DESIGNED BY: JP
CHECKED BY: BL
DATE: 8/01 12/01
REVISED BY: DATE REVISED

DATE PLOTTED => 3/17/2008
TIME PLOTTED => 4:30:56 PM
LAST REVISION 00-00-00

FOR REDUCED PLANS ORIGINAL SCALE IS IN MILLIMETERS 0 20 40 60 80
DGN FILE =>T:\13103\MS\pse\SAS Struc\CCO\SAS CC042\04-0120f1_0141R01.dgn
USERNAME =>llorico
CU 04251
EA 0120F1

DIST	COUNTY	ROUTE	KILOMETER POST TOTAL PROJECT	SHEET No	TOTAL SHEETS
04	SF	80	13.2/13.9	142R1	1204

REGISTERED ELECTRICAL ENGINEER — 12/19/02 DATE

12-6-04
PLANS APPROVAL DATE

REGISTERED PROFESSIONAL ENGINEER — JENS ERLINGSSON No. 8249 Exp. 9/30/06 ELECTRICAL — STATE OF CALIFORNIA

PB POWER, Inc.
A Parsons Brinckerhoff Company
303 Second St., Suite 700N
San Francisco, CA 94107-1317

The State of California or its officers or agents shall not be responsible for the accuracy or completeness of electronic copies of this plan sheet.

Caltrans now has a web site! To get to the web site, go to http://www.dot.ca.gov

PULL BOXES

Location	Type	Pull Box Size	Enclosure Type	Nameplate Pull Box Cover	Remarks
Roadway Barrier	PB-Com			Low Voltage - Call Box	Caltrans standard ES-9C (PB-9A)
Roadway Barrier	PB-Ltg			600 V - Electrical	Caltrans standard ES-9C (PB-9)
1					
Roadway and miscellaneous	PB-1B	304 L x 254 W x 127 D	NEMA 4X	600 V - Electrical	Located at main suspender cable
Roadway and miscellaneous	PB-1C	152 L x 152 W x 102 D	NEMA 4X	600 V - Electrical	Located at suspender brackets
Inside Girder Box	PB-2A	406 L x 254 W x 152 D	NEMA 12	600 V - Electrical	
Service Platform	PB-2B	762 L x 610 W x 203 D	NEMA 4X	600 V - Electrical	
Inside Girder Box	PB-2C	915 L x 610 W x 610 D	NEMA 12	600 V - Electrical	Electrical vault-embedded in conc. deck
Inside Girder Box	PB-2K	1067 L x 915 W x 305 D	NEMA 12	600 V - Electrical	Electrical vault-surface/pendant mounted
Inside Girder Box	PB-2L	152 L x 152 W x 102 D	NEMA 12	600 V - Electrical	For future light pipe

PULL BOXES

Location	Type	Pull Box Size	Enclosure Type	Nameplate Pull Box Cover	Remarks
"E" Line Girder access Platform	PB-2D	457 L x 457 W x 203 D	NEMA 4X	600 V - Electrical	For Base Tower power and lighting
Inside Dehumidification #2 Area	PB-2E	203 L x 203 W x 102 D	NEMA 12	600 V - Electrical	For Base Tower Dehumidification #2 power
Tower Base-Elevator Enclosure	PB-2F	203 L x 203 W x 102 D	NEMA 12	600 V - Electrical	For Elevator pit motor power
Tower Walkway Platform, EL. 93.35 m	PB-2G	457 L x 457 W x 203 D	NEMA 4X	600 V - Electrical	For Power and Lighting
Tower Walkway Platform, EL. 93.35 m	PB-2H	457 L x 457 W x 203 D	NEMA 4X	600 V - Electrical	For Power and Lighting
Elevator Enclosure-EL. 93.35 m	PB-2J	203 L x 203 W x 102 D	NEMA 4X	600 V - Electrical	For Power and Lighting
"E" Line Girder access Platform	PB-2K	305 L x 305 W x 152 D	NEMA 4X	600 V - Electrical	For Base Tower power and lighting
Tower Walkway Platform, EL. 53.0 m	PB-2R	203 L x 203 W x 102 D	NEMA 4X	600 V - Electrical	For Power - Booster Pump P1
Tower Vertical Runs	PB-4D	915 L x 610 W x 610 D	NEMA 12	600 V - Electrical	

SPLICE BOXES

Location	Type	Splice Box Size	Enclosure Type	Nameplate Splice Box Cover	Remarks
Inside Girder Box and Tower EL 63.0	PB-3A	1830 L x 915 W x 305 D	NEMA 12	Danger - High Voltage - Keep Out	
Inside Girder Box	PB-3B	813 L x 203 diameter	Cylindrical Housing	Fiber Optic	72 fibers to 12 fibers
Inside Girder Box	PB-3C	813 L x 203 diameter	Cylindrical Housing	Fiber Optic	72 fibers to 72 fibers

PANEL ENCLOSURES (1)

Location	Type	Cabinet/Terminal Box Size	Enclosure Type	Nameplate Cabinet/Terminal Cover	Remarks
Service Platform	PB-6C	See Panel Layout	NEMA 4X	See Panel Layout on E-305	For Navigation Relay Cabinet
Inside Girder Box	PB-7B	See Panel Layout	NEMA 12	See Panel Layout on E-321	For Scada Communication Terminal Box
Service Platform	PB-7C	508 H x 406 W x 203 D	NEMA 4X	Caltrans Telephone	Enclosure only - For Telephone Terminal Box
Inside Girder Box	PB-7D	508 H x 406 W x 203 D	NEMA 12	Caltrans Telephone	Enclosure only - For Telephone Terminal Box
Service Platform	PB-8A	Size by Contractor	NEMA 4X-Fiberglass	See Panel Schedules	Enclosure only - For Transformer/Panel

SAS SUPERSTRUCTURE WB

Location	Type	Pull Box Size	Enclosure Type	Nameplate Pull Box Cover	Remarks
Inside Light Pole	PB-2N	152 L x 152 W x 102 D	NEMA 12	TOS-MVDS	Cable Termination
Tower Platform	PB-2M	305 L x 305 W x 152 D	NEMA 12	TOS-MVDS	Cable Termination
Inside Dehumidification #1 Area	PB-TOS	203 L x 203 W x 102 D	NEMA 4X	TOS-COM	Dehumidification Unit #1

SHEET NOTE:

(1) Panel enclosures shall be provided with padlock provisions.

REGISTERED PROFESSIONAL ENGINEER — MAXWELL FUMIO TAKATA No. E 8651 Exp. 9/30/2008 ELECTRICAL — STATE OF CALIFORNIA

FOR REVISION ONLY

REQUEST FOR INFORMATION NOT ADDRESSED IN THIS CCO REMAIN IN FORCE

MARK	DATE	DESCRIPTIONS	BY	CH'D	CCO#
		REVISIONS			
1	02/19/08	ELECTRICAL MODIFICATIONS	MP EL	RR	42

CONTRACT CHANGE ORDER NO._____
SHEET _____ OF _____

DETAILS
SAS SUPERSTRUCTURE ROADWAY WESTBOUND PULLBOX SCHEDULES

E-83

DESIGN OVERSIGHT — BEHZAD GOLEMOHAMMADI

STATE OF CALIFORNIA - DEPARTMENT OF TRANSPORTATION — Caltrans

REVISED BY	DATE REVISED
FK	10/01
BL	11/01

CALCULATED/DESIGNED BY
CHECKED BY

LAST REVISION 00-00-00 — DATE PLOTTED => 3/17/2008 — TIME PLOTTED => 4:31:26 PM

FOR REDUCED PLANS ORIGINAL SCALE IS IN MILLIMETERS 0 20 40 60 80

DGN FILE =>T:\13103\MS\pse\SAS Struc\CCO\SAS CC042\04-0120f1_0142R01.dgn
USERNAME =>llorico

CU 04251 — EA 0120F1

DIST	COUNTY	ROUTE	KILOMETER POST TOTAL PROJECT	SHEET No	TOTAL SHEETS
04	SF	80	13.2/13.9	149R1	1204

REGISTERED ELECTRICAL ENGINEER — 12/19/02 DATE

12-6-04
PLANS APPROVAL DATE

REGISTERED PROFESSIONAL ENGINEER — JENS ERLINGSSON No. 8249 Exp. 9/30/06 ELECTRICAL — STATE OF CALIFORNIA

PB POWER, Inc.
A Parsons Brinckerhoff Company
303 Second St., Suite 700N
San Francisco, CA 94107-1317

The State of California or its officers or agents shall not be responsible for the accuracy or completeness of electronic copies of this plan sheet.

Caltrans now has a web site! To get to the web site, go to http://www.dot.ca.gov

Caltrans Metric

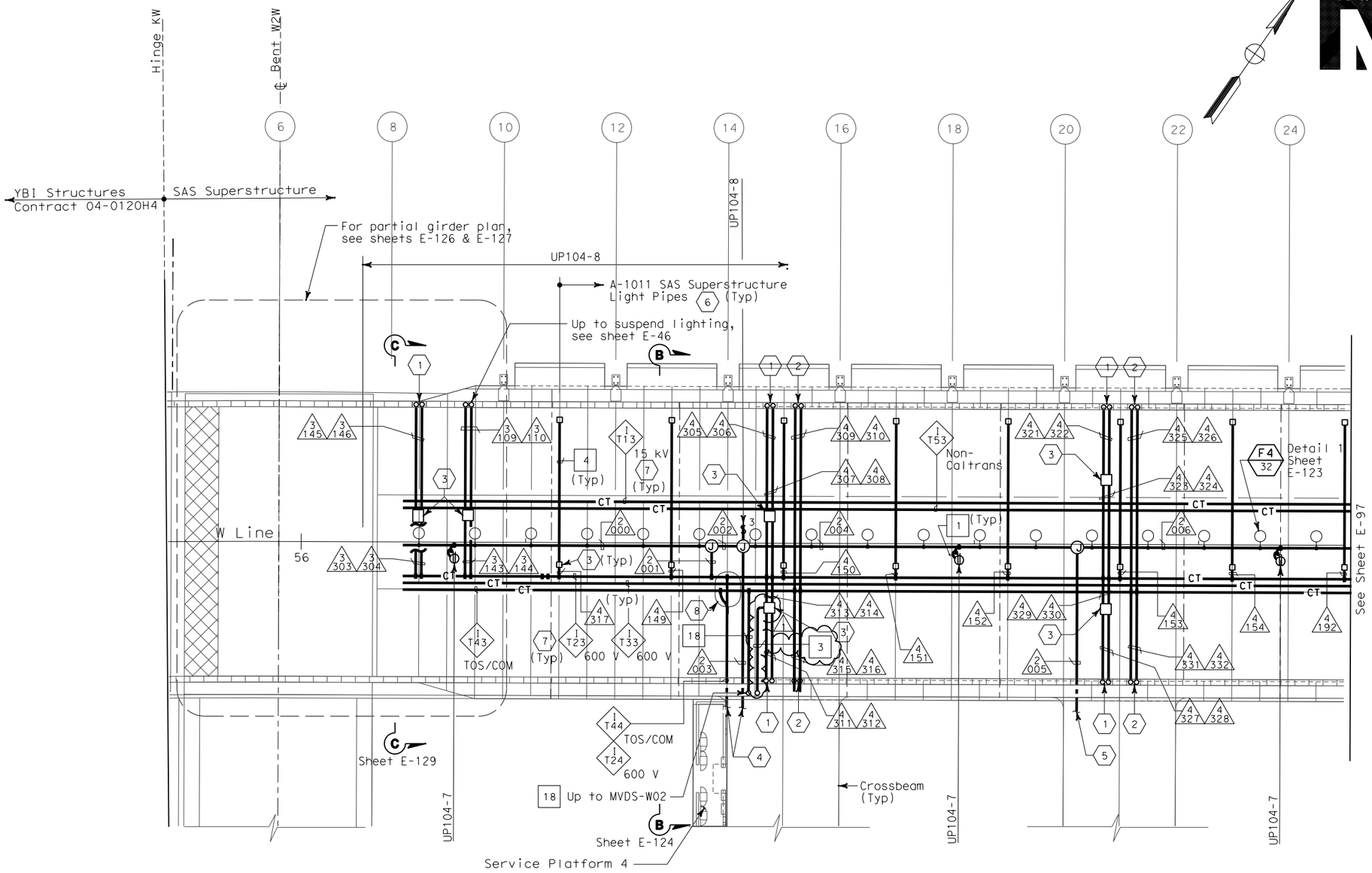

SHEET NOTES:

1. Conduit up to PB-LTG located in barrier, see sheet E-46.
2. Conduit up to PB-COM located in barrier, see sheet E-46.
3. PB-2A locate on top of floor.
4. For cable tray run and lighting inside crossbeam, see sheet E-114.
5. For lighting inside crossbeam, see sheet E-119.
6. PB-2L with circuit for future light pipes. See sheet E-121 for installation details and E-130 for lighting schedule.
7. For cable tray & ground bar support, refer to sheet E-125.
8. For fiber splice tray detail, refer to sheet E-356.

NOTES:

1. References:
   - TOS equipment is shown for conduit routing only. For typical details of TOS controller and devices, see sheets E-344 through E-357.
   - For types of pull boxes, splice boxes and enclosures, see sheet E-83.
   - For bridge grounding plan, see sheet E-111.
   - For circuit and conduit/cable tray schedules, see sheets starting at E-401.
2. For other work related to Hinge KW and items not shown on this sheet, see Electrical Special Provisions.
3. The girder lighting fixtures are shown diagrammatically.Contractor shall install fixtures at railing posts with a maximum of 8000 mm between fixtures. For types and typical lighting fixture installation details, see sheet E-123.
4. The cable trays are shown diagrammatically. For typical girder cable tray plans and sections, see sheets E-124 and E-125.

SAS SUPERSTRUCTURE - CONDUIT AND CABLE TRAY PLAN

REGISTERED PROFESSIONAL ENGINEER — MAXWELL FUMIO TAKATA No. E 8651 Exp. 9/30/2008 ELECTRICAL — STATE OF CALIFORNIA

FOR REVISION ONLY

REQUEST FOR INFORMATION NOT ADDRESSED IN THIS CCO REMAIN IN FORCE

MARK	DATE	DESCRIPTIONS	BY	CH'D	CCO#
		REVISIONS			
1	02/19/08	ELECTRICAL MODIFICATIONS	MP EL	RR	42

CONTRACT CHANGE ORDER NO._____
SHEET _____ OF _____

SAS SUPERSTRUCTURE GIRDER WESTBOUND
LIGHTING AND ELECTRICAL SYSTEMS

SCALE 1:200

E-96

THIS PLAN IS ACCURATE FOR ELECTRICAL WORK ONLY.

ALL DIMENSIONS ARE IN MILLIMETERS UNLESS OTHERWISE SHOWN.

CALCULATED/ DESIGNED BY	CHECKED BY	DATE	REVISED BY
FK	IAH	8/02	8/02

DESIGN OVERSIGHT — BEHZAD GOLEMOHAMMADI

STATE OF CALIFORNIA - DEPARTMENT OF TRANSPORTATION — Caltrans

LAST REVISION 00-00-00 — DATE PLOTTED => 3/17/2008 — TIME PLOTTED => 4:31:47 PM

FOR REDUCED PLANS ORIGINAL SCALE IS IN MILLIMETERS 0 20 40 60 80

DGN FILE =>T:\13103\MS\pse\SAS Struc\CCO\SAS CC042\04-0120f1_0149R01.dgn
USERNAME =>llorico

CU 04251 — EA 0120F1

DIST	COUNTY	ROUTE	KILOMETER POST TOTAL PROJECT	SHEET No	TOTAL SHEETS
04	SF	80	13.2/13.9	152R1	1204

Jens Erlingsson 12/19/02
REGISTERED ELECTRICAL ENGINEER DATE

REGISTERED PROFESSIONAL ENGINEER
JENS ERLINGSSON
No. 8249
Exp. 9/30/06
ELECTRICAL
STATE OF CALIFORNIA

12-6-04
PLANS APPROVAL DATE

PB POWER, Inc.
A Parsons Brinckerhoff Company
303 Second St., Suite 700N
San Francisco, CA 94107-1317

The State of California or its officers or agents shall not be responsible for the accuracy or completeness of electronic copies of this plan sheet.

Caltrans now has a web site! To get to the web site, go to http://www.dot.ca.gov

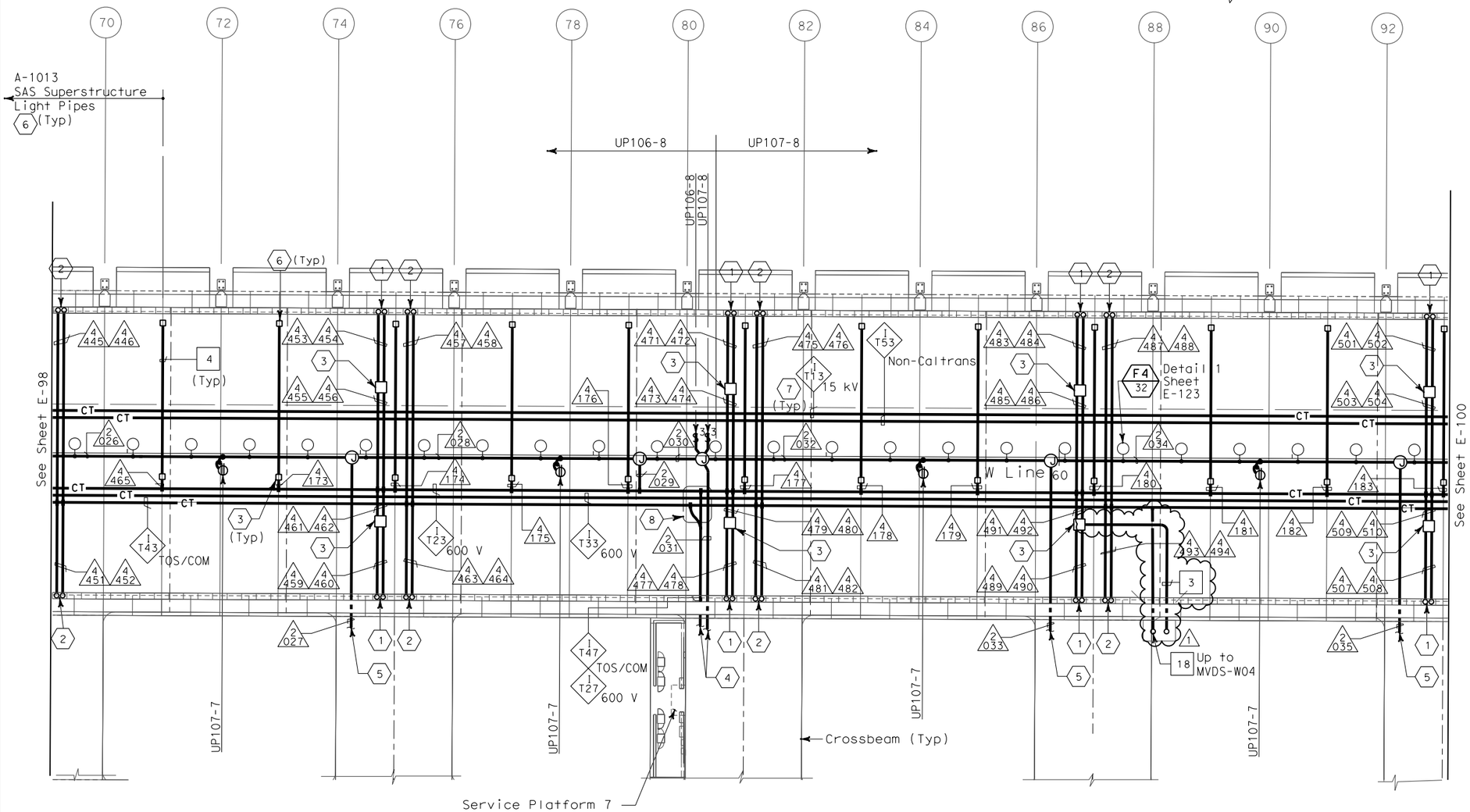

SAS SUPERSTRUCTURE - CONDUIT AND CABLE TRAY PLAN

SHEET NOTES:

1. Conduit up to PB-LTG located in barrier, see sheet E-49.
2. Conduit up to PB-COM located in barrier, see sheet E-49.
3. PB-2A, locate on top of floor.
4. For cable tray run and lighting inside crossbeam, see sheet E-117.
5. For lighting inside crossbeam, see sheet E-119.
6. PB-2L with circuit for future light pipes. See sheet E-121 for installation details and E-130 for lighting schedule.
7. For cable tray and ground bar support, refer to sheet E-125.
8. For fiber splice tray detail, refer to sheet E-356.

NOTES:

1. References:
   - TOS equipment is shown for conduit routing only. For typical details of TOS controller and devices, see sheets E-344 through E-357.
   - For types of pull boxes, splice boxes and enclosures, see sheet E-83.
   - For bridge grounding plan, see sheet E-111.
   - For circuit and conduit/cable tray schedules, see sheets starting at E-401.
2. For other related work not shown on this sheet, see Electrical Special Provisions.
3. The girder lighting fixtures are shown diagrammatically. Contractor shall install fixtures at railing posts with a maximum of 8000 mm between fixtures. For types and typical lighting fixture installation details, see sheet E-123.
4. The cable trays are shown diagrammatically. For typical girder cable tray plans and sections, see sheets E-124 and E-125.

REGISTERED PROFESSIONAL ENGINEER
MAXWELL FUMIO TAKANI
No. E 8651
Exp. 9/30/2008
ELECTRICAL
STATE OF CALIFORNIA

FOR REVISION ONLY

REQUEST FOR INFORMATION NOT ADDRESSED IN THIS CCO REMAIN IN FORCE

MARK	DATE	DESCRIPTIONS	BY	CH'D	CCO#
		REVISIONS			
1	02/19/08	ELECTRICAL MODIFICATIONS	MP EL	RR	42

CONTRACT CHANGE ORDER NO._____
SHEET _____ OF _____

THIS PLAN IS ACCURATE FOR ELECTRICAL WORK ONLY.

ALL DIMENSIONS ARE IN MILLIMETERS UNLESS OTHERWISE SHOWN.

SAS SUPERSTRUCTURE GIRDER WESTBOUND
LIGHTING AND ELECTRICAL SYSTEMS

SCALE 1:200

E-99

CALCULATED/ DESIGNED BY	CHECKED BY	DESIGN OVERSIGHT
FK	IAH	BEHZAD GOLEMOHAMMADI

DATE	REVISED BY
8/02	DATE REVISED

STATE OF CALIFORNIA - DEPARTMENT OF TRANSPORTATION
Caltrans

FOR REDUCED PLANS ORIGINAL SCALE IS IN MILLIMETERS 0 20 40 60 80

DGN FILE =>T:\13103\MS\pse\SAS Struc\CCO\SAS CC042\04-0120f1_0152R01.dgn
USERNAME =>llorico

CU 04251

EA 0120F1

LAST REVISION 00-00-00
DATE PLOTTED => 3/17/2008
TIME PLOTTED => 4:33:07 PM

DIST	COUNTY	ROUTE	KILOMETER POST TOTAL PROJECT	SHEET No	TOTAL SHEETS
04	SF	80	13.2/13.9	153R1	1204

12/19/02
REGISTERED ELECTRICAL ENGINEER DATE

REGISTERED PROFESSIONAL ENGINEER
JENS ERLINGSSON
No. 8249
Exp. 9/30/06
ELECTRICAL
STATE OF CALIFORNIA

12-6-04
PLANS APPROVAL DATE

PB POWER, Inc.
A Parsons Brinckerhoff Company
303 Second St., Suite 700N
San Francisco, CA 94107-1317

The State of California or its officers or agents shall not be responsible for the accuracy or completeness of electronic copies of this plan sheet.

Caltrans now has a web site! To get to the web site, go to http://www.dot.ca.gov

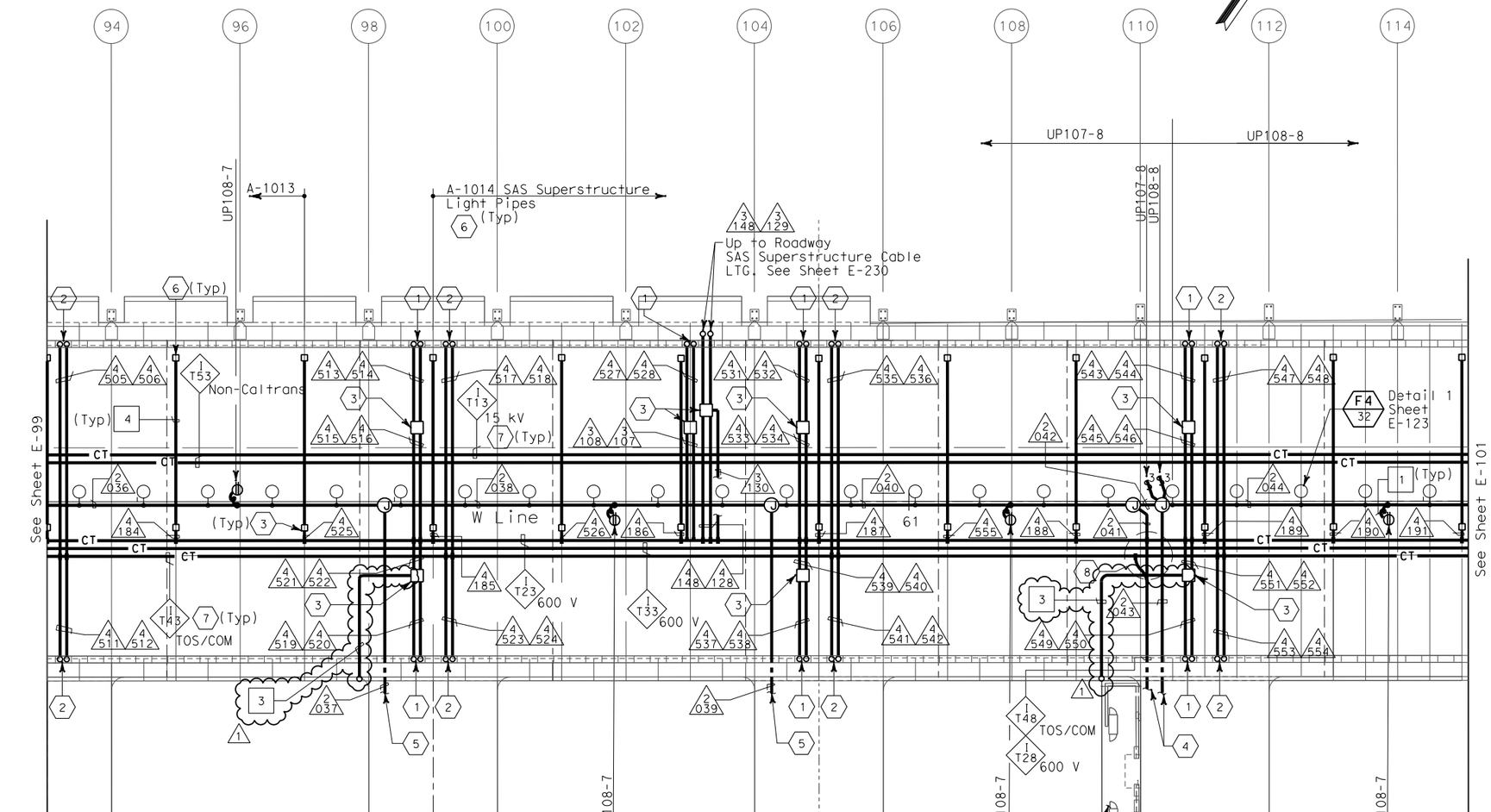

SHEET NOTES:

1. Conduit up to PB-LTG located in barrier, see sheet E-50.
2. Conduit up to PB-COM located in barrier, see sheet E-50.
3. PB-2A, locate on top of floor.
4. For cable tray run and lighting inside crossbeam, see sheet E-118.
5. For lighting inside crossbeam, see sheet E-119.
6. PB-2L with circuit for future light pipes. See sheet E-121 for installation details and E-130 for lighting schedule.
7. For cable tray and ground bar support, refer to sheet E-125.
8. For fiber splice tray detail, refer to sheet E-355.

NOTES:

1. References:
   - TOS equipment is shown for conduit routing only. For typical details of TOS controller and devices, see sheets E-344 through E-357.
   - For types of pull boxes, splice boxes and enclosures, see sheet E-83.
   - For bridge grounding plan, see sheet E-111.
   - For circuit and conduit/cable tray schedules, see sheets starting at E-401.
2. For other related work not shown on this sheet, see Electrical Special Provisions.
3. The girder lighting fixtures are shown diagrammatically. Contractor shall install fixtures at railing posts with a maximum of 8000 mm between fixtures. For types and typical lighting fixture installation details, see sheet E-123.
4. The cable trays are shown diagrammatically. For typical girder cable tray plans and sections, see sheets E-124 and E-125.

SAS SUPERSTRUCTURE - CONDUIT AND CABLE TRAY PLAN

REGISTERED PROFESSIONAL ENGINEER
MAXWELL FUMIO TAKATA
No. E 8651
Exp. 9/30/2008
ELECTRICAL
STATE OF CALIFORNIA

FOR REVISION ONLY

REQUEST FOR INFORMATION NOT ADDRESSED IN THIS CCO REMAIN IN FORCE

MARK	DATE	REVISIONS DESCRIPTIONS	BY	CH'D	CCO#
1	02/19/08	ELECTRICAL MODIFICATIONS	MP EL	RR	42

CONTRACT CHANGE ORDER NO._____
SHEET_____ OF _____

THIS PLAN IS ACCURATE FOR ELECTRICAL WORK ONLY.

ALL DIMENSIONS ARE IN MILLIMETERS UNLESS OTHERWISE SHOWN.

SAS SUPERSTRUCTURE GIRDER WESTBOUND
LIGHTING AND ELECTRICAL SYSTEMS

SCALE 1:200

E-100

STATE OF CALIFORNIA - DEPARTMENT OF TRANSPORTATION
Caltrans
DESIGN OVERSIGHT
BEHZAD GOLEMOHAMMADI

CALCULATED/ DESIGNED BY	CHECKED BY	DATE	REVISED BY
FK	IAH	8/02	DATE REVISED

LAST REVISION 00-00-00
DATE PLOTTED => 3/17/2008
TIME PLOTTED => 4:33:56 PM

FOR REDUCED PLANS ORIGINAL SCALE IS IN MILLIMETERS 0 20 40 60 80

DGN FILE =>T:\13103\MS\pse\SAS Struc\CCO\SAS CC042\04-0120f1_0153R01.dgn
USERNAME =>llorico

CU 04251

EA 0120F1

DIST	COUNTY	ROUTE	KILOMETER POST TOTAL PROJECT	SHEET No	TOTAL SHEETS
04	SF	80	13.2/13.9	154R1	1204

Jens Erlingsson 12/19/02
REGISTERED ELECTRICAL ENGINEER DATE

12-6-04
PLANS APPROVAL DATE

REGISTERED PROFESSIONAL ENGINEER — JENS ERLINGSSON No. 8249 Exp. 9/30/06 ELECTRICAL — STATE OF CALIFORNIA

PB POWER, Inc.
A Parsons Brinckerhoff Company
303 Second St., Suite 700N
San Francisco, CA 94107-1317

The State of California or its officers or agents shall not be responsible for the accuracy or completeness of electronic copies of this plan sheet.

Caltrans now has a web site! To get to the web site, go to http://www.dot.ca.gov

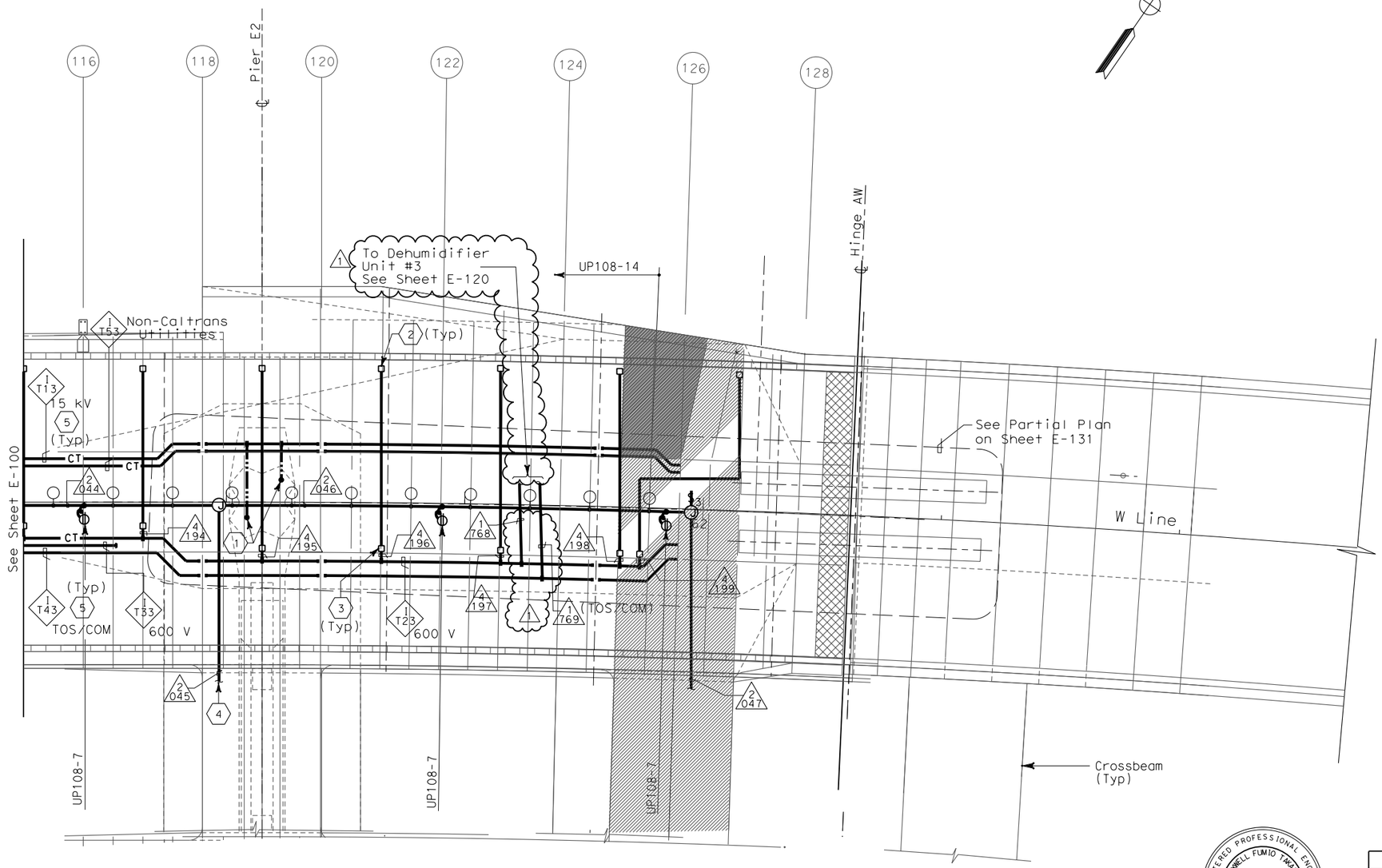

SHEET NOTES:

1. 250 kcmil bare copper grounding conductor exothermically welded to 500 kcmil system ground conductor. See E2/T1 structures EA-0120E1 for limit of work.
2. PB-2L with circuit for future light pipes.
3. PB-2A, locate on top of floor.
4. For lighting inside crossbeam, see sheet E-119.
5. For cable tray & ground bar support, refer to sheet E-125.

NOTES:

1. References:
   - TOS equipment is shown for conduit routing only. For typical details of TOS controller and devices, see sheets E-344 through E-361.
   - For types of pull boxes, splice boxes and enclosures, see sheet E-83.
   - For bridge grounding plan, see sheet E-111.
   - For circuit and conduit/cable tray schedules, see sheets starting at E-401.
2. For other work related to Hinge AW and items not shown on this sheet, see Electrical Special Provisions.
3. The girder lighting fixtures are shown diagrammatically. Contractor shall install fixtures at railing posts with a maximum of 8000 mm between fixtures. For types and typical lighting fixture installation details, see sheet E-123.
4. The cable trays are shown diagrammatically. For typical girder cable tray plans and sections, see sheets E-124 and E-125.

REGISTERED PROFESSIONAL ENGINEER — MARNELL FUMIO TAKAKI No. E 8651 Exp. 9/30/2008 ELECTRICAL — STATE OF CALIFORNIA

FOR REVISION ONLY

REQUEST FOR INFORMATION NOT ADDRESSED IN THIS CCO REMAIN IN FORCE

MARK	DATE	DESCRIPTIONS	BY	CH'D	CCO#
		REVISIONS			
1	02/19/08	ELECTRICAL MODIFICATIONS	MP EL	RR	42

CONTRACT CHANGE ORDER NO._____
SHEET _____ OF _____

SAS SUPERSTRUCTURE - CONDUIT AND CABLE TRAY PLAN

SAS SUPERSTRUCTURE GIRDER WESTBOUND LIGHTING AND ELECTRICAL SYSTEMS

SCALE 1:200

E-101

THIS PLAN IS ACCURATE FOR ELECTRICAL WORK ONLY.

CALCULATED/ DESIGNED BY	DATE	REVISED BY
CHECKED BY	IAH	DATE REVISED

STATE OF CALIFORNIA - DEPARTMENT OF TRANSPORTATION
Caltrans
DESIGN OVERSIGHT
BEHZAD GOLEMOHAMMADI

FOR REDUCED PLANS ORIGINAL SCALE IS IN MILLIMETERS 0 20 40 60 80

DGN FILE =>T:\13103\MS\pse\SAS Struc\CCO\SAS CCO42\04-0120f1_0154R01.dgn
USERNAME =>llorico

CU 04251

EA 0120F1

LAST REVISION 00-00-00
DATE PLOTTED => 3/17/2008
TIME PLOTTED => 4:36:14 PM

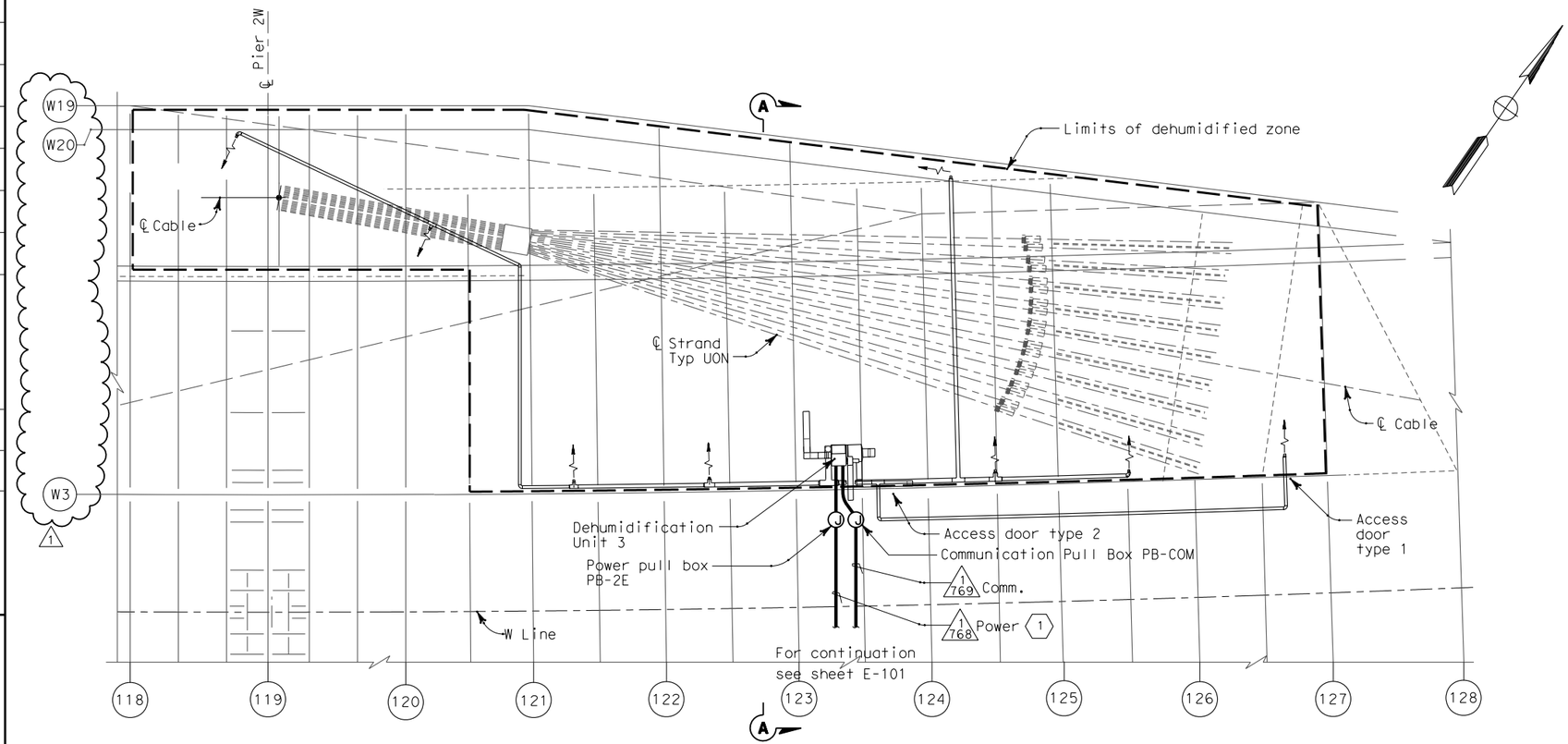

PLAN

SCALE 1:100

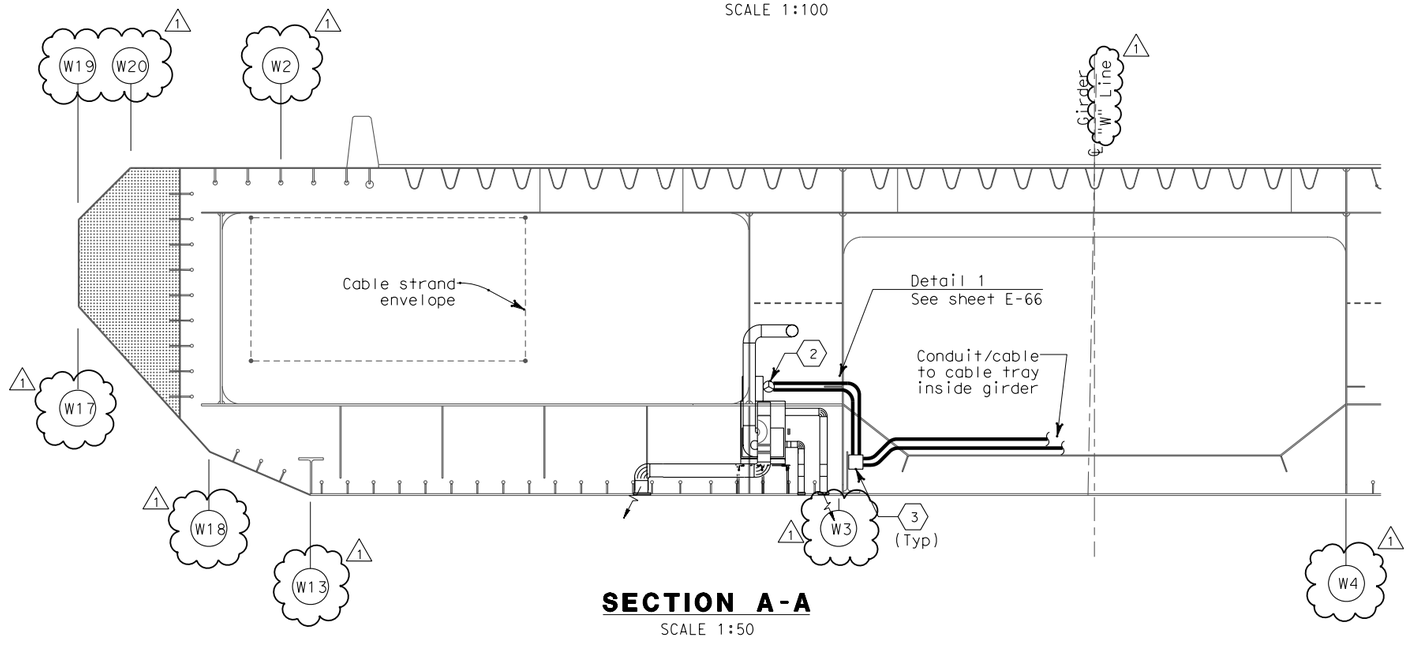

SECTION A-A

SCALE 1:50

DIST	COUNTY	ROUTE	KILOMETER POST TOTAL PROJECT	SHEET No	TOTAL SHEETS
04	SF	80	13.2/13.9	172R1	1204

12/19/02
REGISTERED ELECTRICAL ENGINEER DATE

REGISTERED PROFESSIONAL ENGINEER
JENS ERLINGSSON
No. 8249
Exp. 9/30/06
ELECTRICAL
STATE OF CALIFORNIA

12-6-04
PLANS APPROVAL DATE

PB POWER, Inc.
A Parsons Brinckerhoff Company
303 Second St., Suite 700N
San Francisco, CA 94107-1317

The State of California or its officers or agents shall not be responsible for the accuracy or completeness of electronic copies of this plan sheet.

Caltrans now has a web site! To get to the web site, go to http://www.dot.ca.gov

SHEET NOTES:

1. Route power conduit/cable from dehumidifier to TOS/COM cable tray inside girder. Extend circuit to MH-25. See table this sheet.
2. Final connections to dehumidifier shall be liquid tight flexible metal conduit.
3. Install power and com. junction boxes on unistrut support.

NOTES:

1. References:
   - See sheets M001 through M011 for dehumidifier plans and details.
   - For pull box schedule, see sheet E-83.
2. E Line dehumidification unit 4 is similar. W Line dehumidification unit 3 is shown.

EQUIPMENT	ELECTRICAL	COMM
Dehumidification Unit 3	-480 V, 3 phase, 16 kW (estimated load) - Ckt #1117, LVCC-A - Integral circuit breaker disconnect	- RTU #11W at platform #8

REGISTERED PROFESSIONAL ENGINEER
MAXWELL FUMIO TAKATA
No. E 8651
Exp. 9/30/2008
ELECTRICAL
STATE OF CALIFORNIA

FOR REVISION ONLY

REQUEST FOR INFORMATION NOT ADDRESSED IN THIS CCO REMAIN IN FORCE

MARK	DATE	DESCRIPTIONS (REVISIONS)	BY	CH'D	CCO#
1	02/19/08	ELECTRICAL MODIFICATIONS	MP EL	RR	42

CONTRACT CHANGE ORDER NO._____
SHEET _____ OF _____

DETAILS
SAS SUPERSTRUCTURE GIRDER WESTBOUND DEHUMIDIFIER UNIT 3

SCALE AS NOTED

E-120

CALCULATED/ DESIGNED BY	CHECKED BY
FK	IAH

DATE	REVISED BY
08/02	DATE REVISED

DESIGN OVERSIGHT
BEHZAD GOLEMOHAMMADI

STATE OF CALIFORNIA - DEPARTMENT OF TRANSPORTATION
Caltrans

ALL DIMENSIONS ARE IN MILLIMETERS UNLESS OTHERWISE SHOWN.

FOR REDUCED PLANS ORIGINAL SCALE IS IN MILLIMETERS 0 20 40 60 80

DGN FILE =>T:\13103\MS\pse\SAS Struc\CCO\SAS CC042\04-0120f1_0172R01.dgn
USERNAME =>llorico

CU 04251

EA 0120F1

LAST REVISION 00-00-00
DATE PLOTTED => 3/17/2008
TIME PLOTTED => 4:36:48 PM

DIST	COUNTY	ROUTE	KILOMETER POST TOTAL PROJECT	SHEET No	TOTAL SHEETS
04	SF	80	13.2/13.9	188R1	1204

REGISTERED ELECTRICAL ENGINEER — 12/19/02 DATE

12-6-04
PLANS APPROVAL DATE

REGISTERED PROFESSIONAL ENGINEER — JENS ERLINGSSON No. 8249 Exp. 9/30/06 ELECTRICAL — STATE OF CALIFORNIA

PB POWER, Inc.
A Parsons Brinckerhoff Company
303 Second St., Suite 700N
San Francisco, CA 94107-1317

The State of California or its officers or agents shall not be responsible for the accuracy or completeness of electronic copies of this plan sheet.

Caltrans now has a web site! To get to the web site, go to: http://www.dot.ca.gov

Caltrans Metric

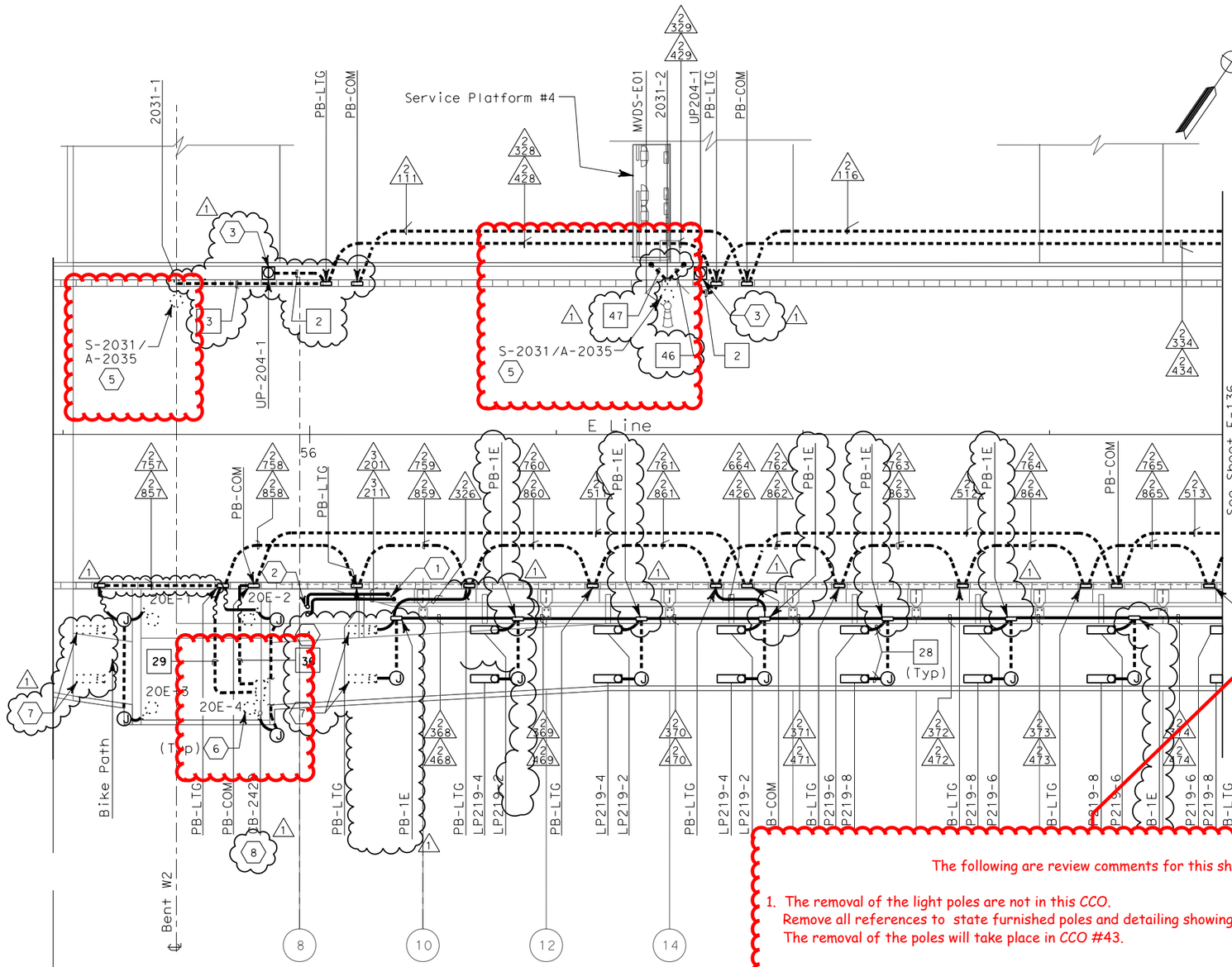

SHEET NOTES:

1. Conduit from barrier pull box or other equipment down into Girder Box, see sheet E-181.
2. For conduit to suspension cable lighting, see sheet E-226.
3. Roadway Barrier Receptacle, see Detail 1, sheet E-162.
4. Contractor shall coil 30 meters inside cable tray for feed into PB-COM by others.
5. Light pole, luminaires and lowering device are state furnished and installed by contractor.
6. Belvedere light poles and luminaires are state furnished and installed by others.
7. Railing lights are contractor furnished and installed by others.
8. Call box is state furnished and installed by contractor.

The following are review comments for this sheet

1. The removal of the light poles are not in this CCO.
   Remove all references to state furnished poles and detailing showing the poles are by others.
   The removal of the poles will take place in CCO #43.

1. References:
   - For typical details and locations of conduit connections to light poles, barrier outlet boxes, call boxes, overhead sign lighting, CMS, CCTV and MVDS, see sheets E-160 thru E-162 and E-169.
   - TOS equipment is shown for conduit routing only. For typical details of TOS controller and devices, see sheets E-344 through E-357.
   - For types of pull boxes, splice boxes and enclosures, see sheet E-169.
   - For circuit and conduit/cable tray schedules, see sheets starting at E-401.

For Roadway level, Bike Path and Belvedere Lighting Fixture Schedules and wiring diagrams see sheets E-146, E-147 and E-165.

For Roadway level and Bike Path Call Box Schedule, see sheet E-397.

For number of lighting fixtures (main tower lights) see lighting schedule sheets E-271 and E-272.

5. All conduits and fittings routed exposed between the Bike Path and the roadway shall be galvanized rigid steel, PVC coated.
6. See sheets E-160 thru E-165 for conduit locations.
7. For Belvedere Lighting Fixture installation, see sheet E-173.

SAS SUPERSTRUCTURE - CONDUIT PLAN

YBI Structures — SAS Superstructure

Hinge KE

SAS SUPERSTRUCTURE ROADWAY EASTBOUND
LIGHTING AND ELECTRICAL SYSTEMS

SCALE 1:200

REGISTERED PROFESSIONAL ENGINEER — MAXWELL FUMIO TAKATA No. E 8651 Exp. 9/30/2008 ELECTRICAL — STATE OF CALIFORNIA

FOR REVISION ONLY

REQUEST FOR INFORMATION NOT ADDRESSED IN THIS CCO REMAIN IN FORCE

MARK	DATE	REVISIONS	BY	CH'D	CCO#
1	02/19/08	ELECTRICAL MODIFICATIONS	MP EL	RR	42

CONTRACT CHANGE ORDER NO._____
SHEET _____ OF _____

THIS PLAN ACCURATE FOR ELECTRICAL WORK ONLY.

ALL DIMENSIONS ARE IN METERS UNLESS OTHERWISE SHOWN.

FOR REDUCED PLANS ORIGINAL SCALE IS IN MILLIMETERS 0 20 40 60 80

DGN FILE =>T:\13103\MS\pse\SAS Struc\CCO\SAS CC042\04-0120f1_0188R01.dgn
USERNAME =>llorico

CU 04251 EA 0120F1

LAST REVISION 00-00-00 DATE PLOTTED => 3/17/2008 TIME PLOTTED => 4:37:15 PM

	DATE	REVISED BY
CALCULATED/DESIGNED BY	08/02	EDC
CHECKED BY	08/02	CYF
	DATE	REVISED

DESIGN OVERSIGHT — BEHZAD GOLEMOHAMMADI

STATE OF CALIFORNIA - DEPARTMENT OF TRANSPORTATION — Caltrans

E-135

DIST	COUNTY	ROUTE	KILOMETER POST TOTAL PROJECT	SHEET No	TOTAL SHEETS
04	SF	80	13.2/13.9	189R1	1204

REGISTERED ELECTRICAL ENGINEER — 12/19/02 DATE

12-6-04
PLANS APPROVAL DATE

REGISTERED PROFESSIONAL ENGINEER — JENS ERLINGSSON No. 8249 Exp. 9/30/06 ELECTRICAL — STATE OF CALIFORNIA

PB POWER, Inc.
A Parsons Brinckerhoff Company
303 Second St., Suite 700N
San Francisco, CA 94107-1317

The State of California or its officers or agents shall not be responsible for the accuracy or completeness of electronic copies of this plan sheet.

Caltrans now has a web site! To get to the web site, go to: http://www.dot.ca.gov

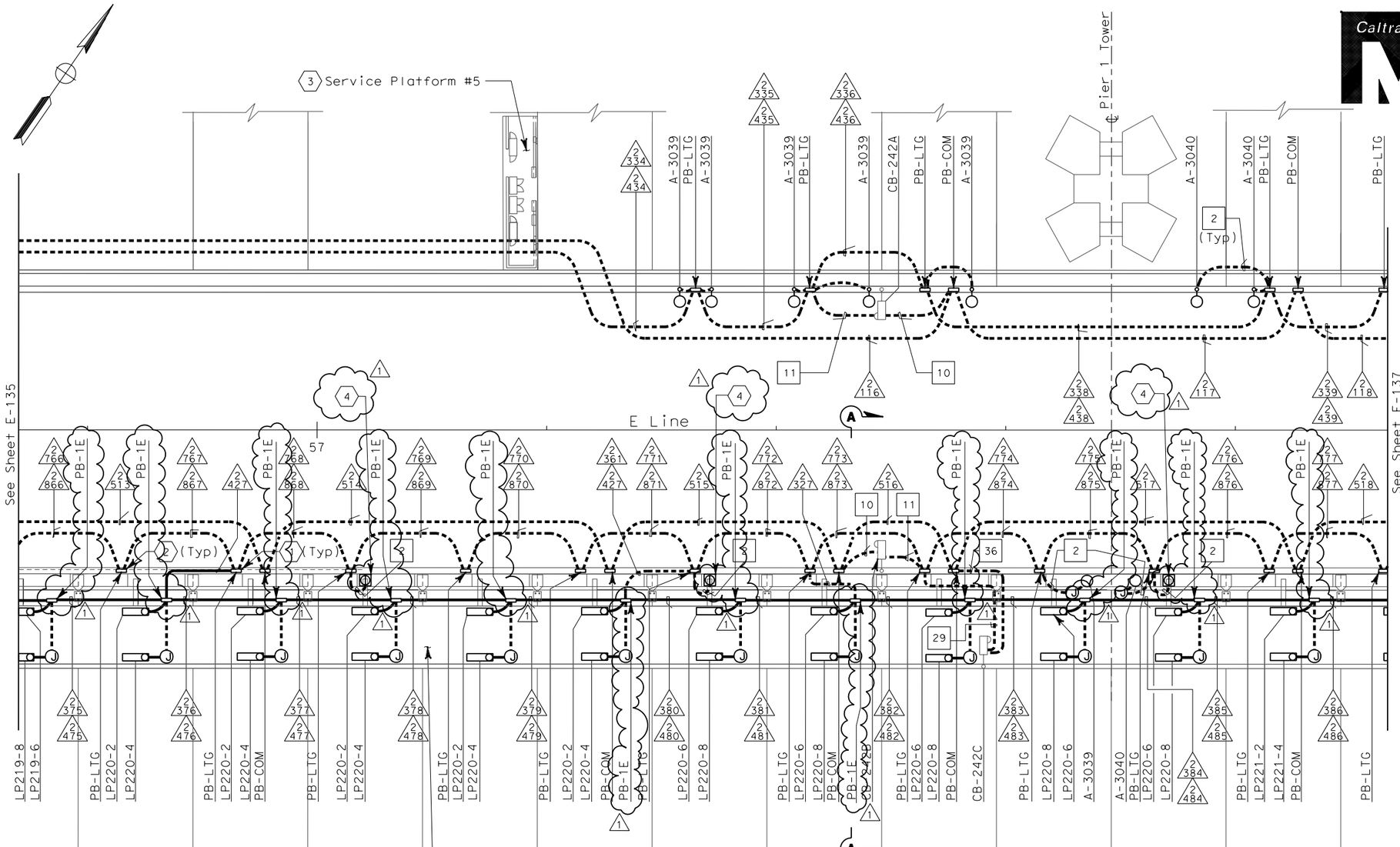

SHEET NOTES:

1. Conduit from barrier pullbox or other equipment down into Girder Box, see sheet E-182.
2. For conduit to tower and suspension cable lighting see sheet E-227.
3. Contractor shall furnish and install UP-205 and LP-220 per sheet E-72. For complete scope of work on platform and other related work not shown on this sheet, see Electrical Special Provisions.
4. Roadway Barrier Receptacle, see Detail 1, sheet E-162.

NOTES:

1. References:
   - For typical details and locations of conduit connections to light poles, barrier outlet boxes, call boxes, overhead sign lighting, CMS, CCTV and MVDS, see sheets E-160 thru E-162 and E-169.
   - TOS equipment is shown for conduit routing only. For typical details of TOS controller and devices, see sheets E-344 through E-357.
   - For types of pull boxes, splice boxes and enclosures, see sheet E-169.
   - For circuit and conduit/cable tray schedules, see sheets starting at E-401.
2. For Roadway Level Call Boxes, refer to sheet E-396.
3. For Roadway level, Bike Path and Belvedere Lighting Fixture Schedules, see sheets E-146, E-147 and E-165.
4. For Roadway level and Bike Path Call Box Schedule, see sheet E-397.
5. For number of lighting fixtures (main tower lights) see lighting schedule sheets E-271 and E-272.
6. All conduits and fittings routed exposed between the Bike Path and the roadway shall be galvanized rigid steel, PVC coated.
7. See sheets E-160 thru E-165 for conduit locations.

SAS SUPERSTRUCTURE CONDUIT - PLAN

REGISTERED PROFESSIONAL ENGINEER — MAXWELL FUMIO TAKATA No. E 8651 Exp. 9/30/2008 ELECTRICAL — STATE OF CALIFORNIA

FOR REVISION ONLY

REQUEST FOR INFORMATION NOT ADDRESSED IN THIS CCO REMAIN IN FORCE

MARK	DATE	DESCRIPTIONS	BY	CH'D	CCO#
		REVISIONS			
1	02/19/08	ELECTRICAL MODIFICATIONS	MP EL	RR	42

CONTRACT CHANGE ORDER NO._____
SHEET _____ OF _____

THIS PLAN ACCURATE FOR ELECTRICAL WORK ONLY.

SAS SUPERSTRUCTURE ROADWAY EASTBOUND
LIGHTING AND ELECTRICAL SYSTEMS

SCALE 1:200

E-136

ALL DIMENSIONS ARE IN METERS UNLESS OTHERWISE SHOWN

FOR REDUCED PLANS ORIGINAL SCALE IS IN MILLIMETERS 0 20 40 60 80

DGN FILE =>T:\13103\MS\pse\SAS Struc\CCO\SAS CCO42\04-0120f1_0189R01.dgn
USERNAME =>llorico

CU 04251 EA 0120F1

DESIGN OVERSIGHT — BEHZAD GOLEMOHAMMADI
STATE OF CALIFORNIA - DEPARTMENT OF TRANSPORTATION — Caltrans

CALCULATED/ DESIGNED BY	DATE	REVISED BY
CHECKED BY	EDC 08/02	DATE REVISED
	CYF 08/02	

LAST REVISION 00-00-00 — DATE PLOTTED => 3/17/2008 TIME PLOTTED => 4:37:35 PM

DIST	COUNTY	ROUTE	KILOMETER POST TOTAL PROJECT	SHEET No	TOTAL SHEETS
04	SF	80	13.2/13.9	190R1	1204

Jens Erlingsson 12/19/02
REGISTERED ELECTRICAL ENGINEER DATE

12-6-04
PLANS APPROVAL DATE

REGISTERED PROFESSIONAL ENGINEER — JENS ERLINGSSON No. 8249 Exp. 9/30/06 ELECTRICAL — STATE OF CALIFORNIA

PB POWER, Inc.
A Parsons Brinckerhoff Company
303 Second St., Suite 700N
San Francisco, CA 94107-1317

The State of California or its officers or agents shall not be responsible for the accuracy or completeness of electronic copies of this plan sheet.

Caltrans now has a web site! To get to the web site, go to: http://www.dot.ca.gov

Caltrans Metric

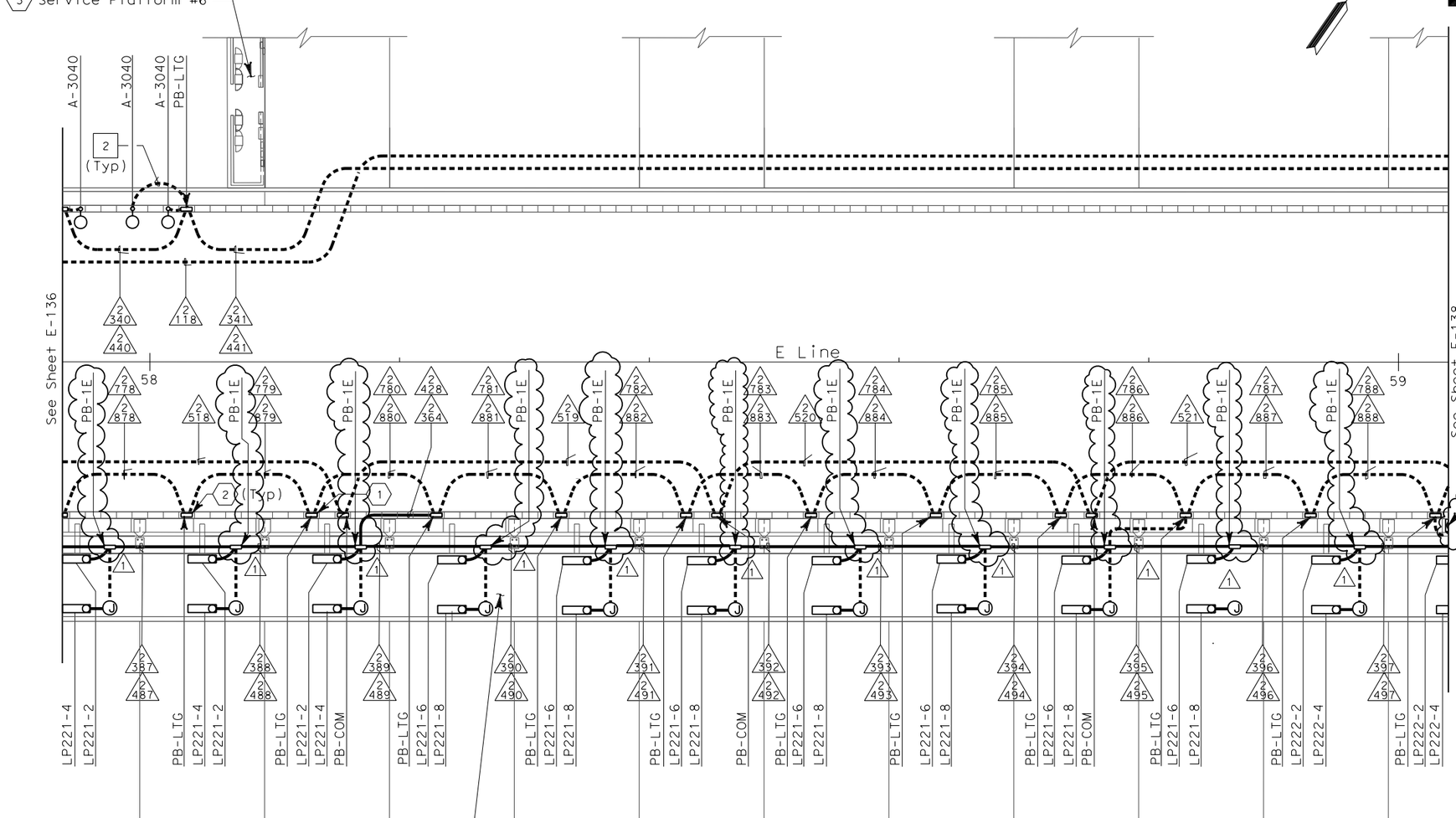

SHEET NOTES:

1. Conduit from barrier pullbox or other equipment down into Girder Box, see sheet E-183.
2. For conduit to tower and suspension cable lighting see sheet E-228.
3. Contractor shall furnish and install UP-206 and LP-221 per sheet E-73. For complete scope of work on platform and other related work not shown on this sheet, see Electrical Special Provisions.
4. Roadway Barrier Receptacle, see Detail 1, sheet E-162.

NOTES:

1. References:
   - For typical details and locations of conduit connections to light poles, barrier outlet boxes, call boxes, overhead sign lighting, CMS, CCTV and MVDS, see sheets E-160 thru E-162 and E-169.
   - TOS equipment is shown for conduit routing only. For typical details of TOS controller and devices, see sheets E-344 through E-357.
   - For types of pull boxes, splice boxes and enclosures, see sheet E-169.
   - For circuit and conduit/cable tray schedules, see sheets starting at E-401.
2. For Roadway Level Call Boxes, refer to sheet E-396.
3. For Roadway level, Bike Path and Belvedere Lighting Fixture Schedules, see sheets E-146, E-147 and E-165.
4. For Roadway level and Bike Path Call Box Schedule, see sheet E-397.
5. For number of lighting fixtures (main tower lights) see lighting schedule sheets E-271 and E-272.
6. All conduits and fittings routed exposed between the Bike Path and the roadway shall be galvanized rigid steel, PVC coated.
7. See sheets E-160 thru E-165 for conduit locations.

SAS SUPERSTRUCTURE - CONDUIT PLAN

REGISTERED PROFESSIONAL ENGINEER — MAXWELL FUMIO TAKATA No. E 8651 Exp. 9/30/2008 ELECTRICAL — STATE OF CALIFORNIA

FOR REVISION ONLY

REQUEST FOR INFORMATION NOT ADDRESSED IN THIS CCO REMAIN IN FORCE

MARK	DATE	DESCRIPTIONS	BY	CH'D	CCO#
		REVISIONS			
1	02/19/08	ELECTRICAL MODIFICATIONS	MP EL	RR	42

CONTRACT CHANGE ORDER NO._____
SHEET _____ OF _____

THIS PLAN ACCURATE FOR ELECTRICAL WORK ONLY.

SAS SUPERSTRUCTURE ROADWAY EASTBOUND
LIGHTING AND ELECTRICAL SYSTEMS

SCALE 1:200

E-137

ALL DIMENSIONS ARE IN METERS UNLESS OTHERWISE SHOWN

FOR REDUCED PLANS ORIGINAL SCALE IS IN MILLIMETERS 0 20 40 60 80

DGN FILE =>T:\13103\MS\pse\SAS Struc\CCO\SAS CCO42\04-0120f1_0190R01.dgn
USERNAME =>llorico

CU 04251 EA 0120F1

LAST REVISION 00-00-00
DATE PLOTTED => 3/17/2008
TIME PLOTTED => 4:37:58 PM

DESIGN OVERSIGHT	CALCULATED/ DESIGNED BY	EDC	DATE 08/02	REVISED BY
BEHZAD GOLEMOHAMMADI	CHECKED BY	CYF	08/02	DATE REVISED

STATE OF CALIFORNIA - DEPARTMENT OF TRANSPORTATION
Caltrans

DIST	COUNTY	ROUTE	KILOMETER POST TOTAL PROJECT	SHEET No	TOTAL SHEETS
04	SF	80	13.2/13.9	191R1	1204

12/19/02
REGISTERED ELECTRICAL ENGINEER DATE

REGISTERED PROFESSIONAL ENGINEER — JENS ERLINGSSON No. 8249 Exp. 9/30/06 ELECTRICAL — STATE OF CALIFORNIA

12-6-04
PLANS APPROVAL DATE

PB POWER, Inc.
A Parsons Brinckerhoff Company
303 Second St., Suite 700N
San Francisco, CA 94107-1317

The State of California or its officers or agents shall not be responsible for the accuracy or completeness of electronic copies of this plan sheet.

Caltrans now has a web site! To get to the web site, go to: http://www.dot.ca.gov

Caltrans Metric

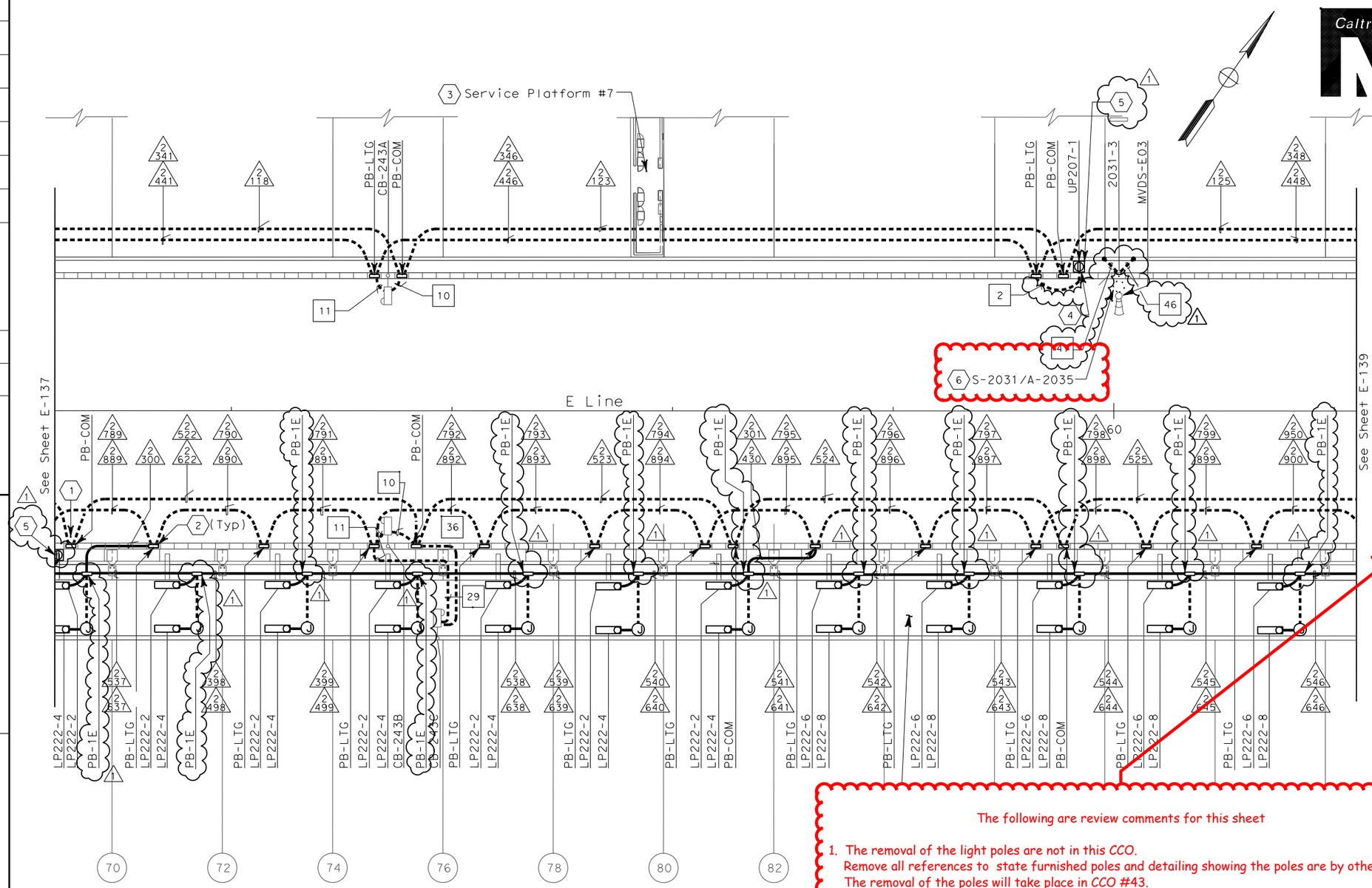

SHEET NOTES:

1. Conduit from barrier pullbox or other equipment down into Girder Box, see sheet E-184.
2. For conduit to tower and suspension cable lighting, see sheet E-229.
3. Contractor shall furnish and install UP-207 and LP-222 per sheet E-74. For complete scope of work on platform and other related work not shown on this sheet, see Electrical Special Provisions.
4. Conduit down to girder for MVDS, see sheet E-184.
5. Roadway Barrier Receptacle, see Detail 1, sheet E-162.
6. Light pole, luminaires and lowering device are state furnished and installed by contractor.

NOTES:

1. References:
   - For typical details and locations of conduit connections to light poles, barrier outlet boxes, call boxes, overhead sign lighting, CMS, CCTV and MVDS, see sheets E-160 thru E-162 and E-169.
   - TOS equipment is shown for conduit routing only. For typical details of TOS controller and devices, see sheets E-344 through E-357.
   - For types of pull boxes, splice boxes and enclosures, see sheet E-169.
   - For circuit and conduit/cable tray schedules, see sheets starting at E-401.
2. For Roadway Level Call Boxes, refer to sheet E-396.
3. For Roadway level, Bike Path and Belvedere Lighting Fixture Schedules, see sheets E-146, E-147 and E-165.
4. For Roadway level and Bike Path Call Box Schedule, see sheet E-397.
5. For number of lighting fixtures (main tower lights) see lighting schedule sheets E-271 and E-272.
6. All conduits and fittings routed exposed between the Bike Path and the roadway shall be galvanized rigid steel, PVC coated.
7. See sheets E-160 thru E-165 for conduit locations.

The following are review comments for this sheet

1. The removal of the light poles are not in this CCO.
   Remove all references to state furnished poles and detailing showing the poles are by others.
   The removal of the poles will take place in CCO #43.

SAS SUPERSTRUCTURE - CONDUIT PLAN

SAS SUPERSTRUCTURE ROADWAY EASTBOUND
LIGHTING AND ELECTRICAL SYSTEMS

SCALE 1:200

REGISTERED PROFESSIONAL ENGINEER — MARNELL FUMIO TAKARA No. E 8651 Exp. 9/30/2008 ELECTRICAL — STATE OF CALIFORNIA

FOR REVISION ONLY

REQUEST FOR INFORMATION NOT ADDRESSED IN THIS CCO REMAIN IN FORCE

MARK	DATE	REVISIONS DESCRIPTIONS	MP EL BY	RR CH'D	42 CCO#
1	02/19/08	ELECTRICAL MODIFICATIONS			

CONTRACT CHANGE ORDER NO._____
SHEET _____ OF _____

THIS PLAN ACCURATE FOR ELECTRICAL WORK ONLY.

ALL DIMENSIONS ARE IN METERS UNLESS OTHERWISE SHOWN

FOR REDUCED PLANS ORIGINAL SCALE IS IN MILLIMETERS 0 20 40 60 80

DGN FILE =>T:\13103\MS\pse\SAS Struc\CCO\SAS CC042\04-0120f1_191R01.dgn
USERNAME =>llorico

CU 04251 EA 0120F1

DESIGN OVERSIGHT — BEHZAD GOLEMOHAMMADI
STATE OF CALIFORNIA - DEPARTMENT OF TRANSPORTATION — Caltrans

CALCULATED/ DESIGNED BY	CHECKED BY	DATE	EDC	CYF	DATE REVISED	REVISED BY
		08/02			08/02	

LAST REVISION 00-00-00 — DATE PLOTTED => 3/17/2008 TIME PLOTTED => 4:39:08 PM

E-138

DIST	COUNTY	ROUTE	KILOMETER POST TOTAL PROJECT	SHEET No	TOTAL SHEETS
04	SF	80	13.2/13.9	192R1	1204

Jens Erlingsson 12/19/02
REGISTERED ELECTRICAL ENGINEER DATE

12-6-04
PLANS APPROVAL DATE

REGISTERED PROFESSIONAL ENGINEER — JENS ERLINGSSON No. 8249 Exp. 9/30/06 ELECTRICAL — STATE OF CALIFORNIA

PB POWER, Inc.
A Parsons Brinckerhoff Company
303 Second St., Suite 700N
San Francisco, CA 94107-1317

The State of California or its officers or agents shall not be responsible for the accuracy or completeness of electronic copies of this plan sheet.

To get to the web site, go to: http://www.dot.ca.gov

Caltrans Metric

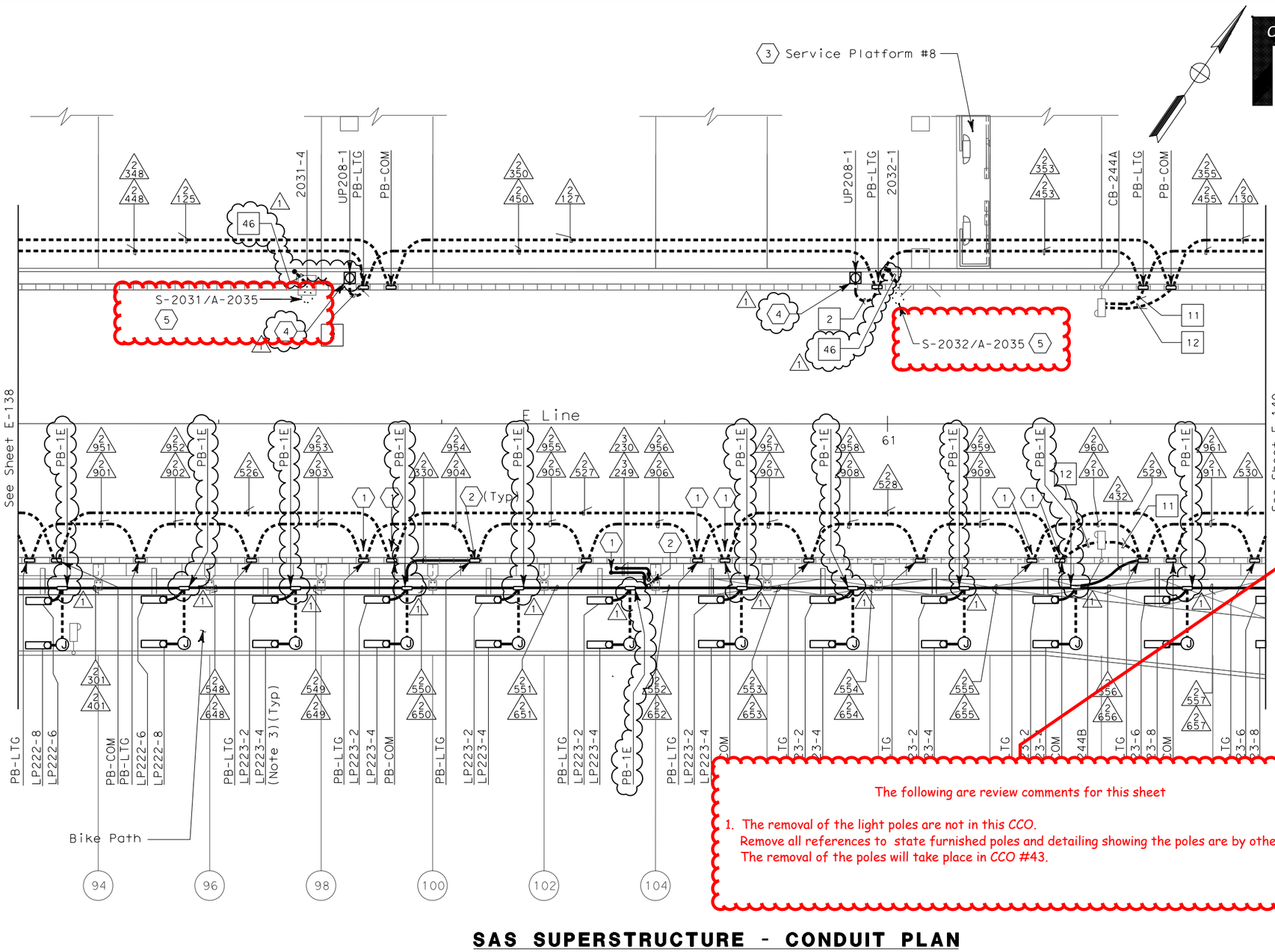

The following are review comments for this sheet

1. The removal of the light poles are not in this CCO.
   Remove all references to state furnished poles and detailing showing the poles are by others.
   The removal of the poles will take place in CCO #43.

SHEET NOTES:

1. Conduit from barrier pullbox or other equipment down into Girder Box, see sheet E-185.
2. Contractor shall furnish and install UP-208 and LP-223 per sheet E-75. For complete scope of work on platform and other related work not shown on this sheet, see Electrical Special Provisions.
3. For conduit to tower and suspension cable lighting, see sheet E-230.
4. Roadway Barrier Receptacle, see Detail 1, sheet E-162.
5. Light pole, luminaires and lowering device are state furnished and installed by contractor.

NOTES:

1. References:
   - For typical details and locations of conduit connections to light poles, barrier outlet boxes, call boxes, overhead sign lighting, CMS, CCTV and MVDS, see sheets E-160 thru E-162 and E-169.
   - TOS equipment is shown for conduit routing only. For typical details of TOS controller and devices, see sheets E-344 through E-357.
   - For types of pull boxes, splice boxes and enclosures, see sheet E-169.
   - For circuit and conduit/cable tray schedules, see sheets starting at E-401.
2. For Roadway Level Call Boxes, refer to sheet E-396.
3. For Roadway level, Bike Path and Belvedere Lighting Fixture Schedules, see sheets E-146, E-147 and E-165.
4. For Roadway level and Bike Path Call Box Schedule, see sheet E-397.
5. For number of lighting fixtures (main tower lights) see lighting schedule sheets E-271 and E-272.
6. All conduits and fittings routed exposed between the Bike Path and the roadway shall be rigid galvanized steel, PVC coated.
7. See sheets E-160 thru E-165 for conduit locations.

SAS SUPERSTRUCTURE - CONDUIT PLAN

REGISTERED PROFESSIONAL ENGINEER — MANUELL FUMIO TAKATA No. E 8651 Exp. 9/30/2008 ELECTRICAL — STATE OF CALIFORNIA

FOR REVISION ONLY

REQUEST FOR INFORMATION NOT ADDRESSED IN THIS CCO REMAIN IN FORCE					
MARK	DATE	REVISIONS DESCRIPTIONS	MP EL BY	RR CH'D	CCO#
1	02/19/08	ELECTRICAL MODIFICATIONS			42

CONTRACT CHANGE ORDER NO._____
SHEET _____ OF _____

THIS PLAN ACCURATE FOR ELECTRICAL WORK ONLY.

SAS SUPERSTRUCTURE ROADWAY EASTBOUND
LIGHTING AND ELECTRICAL SYSTEMS

SCALE 1:200

E-139

STATE OF CALIFORNIA - DEPARTMENT OF TRANSPORTATION
Caltrans
DESIGN OVERSIGHT
BEHZAD GOLEMOHAMMADI

CALCULATED/ DESIGNED BY	EDC	DATE 08/02	REVISED BY
CHECKED BY	CYF	08/02	DATE REVISED

LAST REVISION 00-00-00
DATE PLOTTED => 3/17/2008
TIME PLOTTED => 4:39:28 PM

ALL DIMENSIONS ARE IN METERS UNLESS OTHERWISE SHOWN

FOR REDUCED PLANS ORIGINAL SCALE IS IN MILLIMETERS 0 20 40 60 80

DGN FILE =>T:\13103\MS\pse\SAS Struc\CCO\SAS CCO42\04-0120f1_0192R01.dgn
USERNAME =>llorico

CU 04251

EA 0120F1

DIST	COUNTY	ROUTE	KILOMETER POST TOTAL PROJECT	SHEET No	TOTAL SHEETS
04	SF	80	13.2/13.9	193R1	1204

12/19/02
REGISTERED ELECTRICAL ENGINEER DATE

12-6-04
PLANS APPROVAL DATE

REGISTERED PROFESSIONAL ENGINEER — JENS ERLINGSSON No. 8249 Exp. 9/30/06 ELECTRICAL — STATE OF CALIFORNIA

PB POWER, Inc.
A Parsons Brinckerhoff Company
303 Second St., Suite 700N
San Francisco, CA 94107-1317

The State of California or its officers or agents shall not be responsible for the accuracy or completeness of electronic copies of this plan sheet.

Caltrans now has a web site! To get to the web site, go to http://www.dot.ca.gov

Caltrans Metric

The following are review comments for this sheet

1. The removal of the light poles are not in this CCO.
   Remove all references to state furnished poles and detailing showing the poles are by others.
   The removal of the poles will take place in CCO #43.

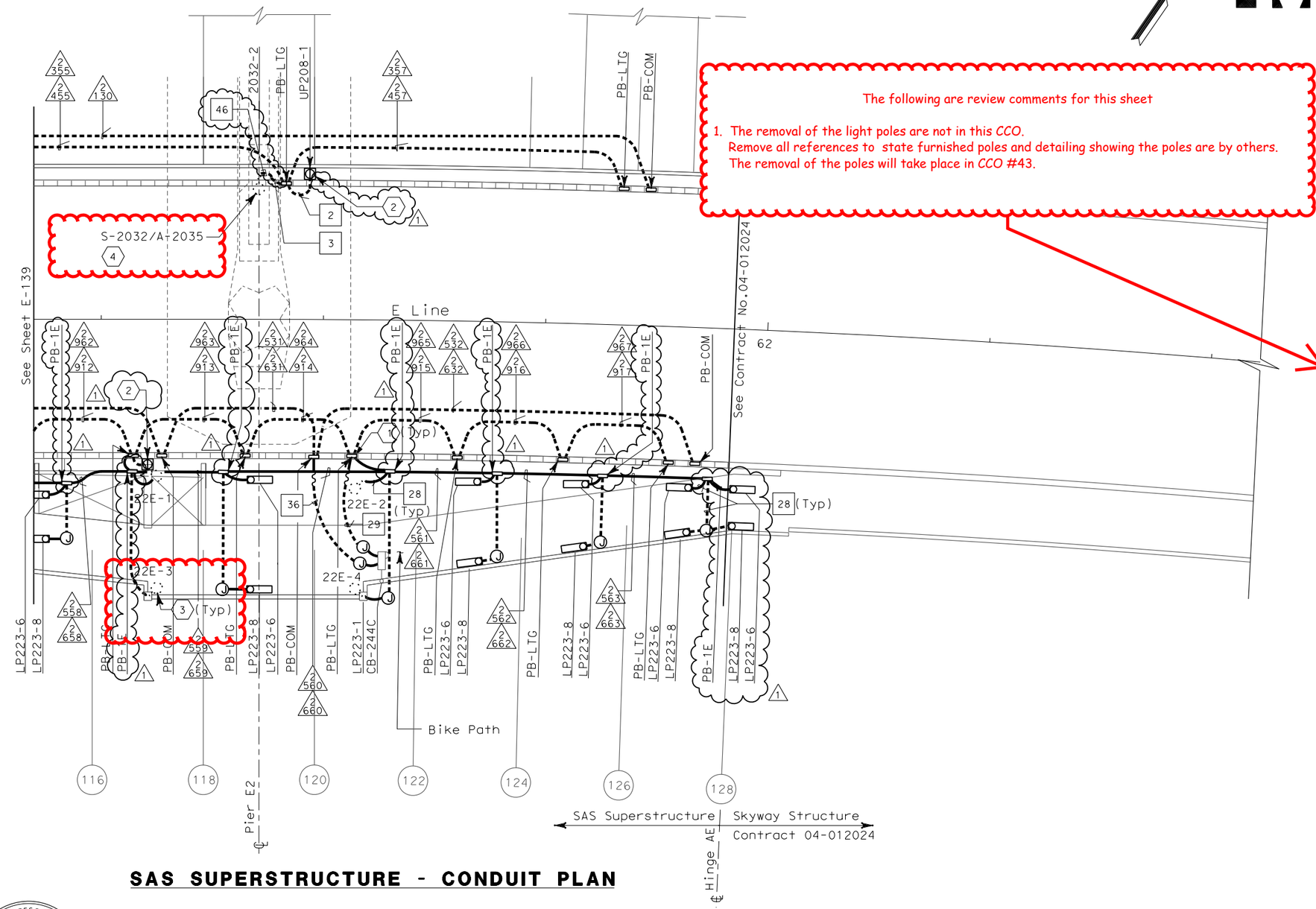

SAS SUPERSTRUCTURE - CONDUIT PLAN

SHEET NOTES:

1. For conduit to tower and suspension cable lighting, see sheet E-230.
2. Roadway Barrier Receptacle, see Detail 1, sheet E-162.
3. Belvedere lights are state furnished and installed by contractor.
4. Light pole, luminaires and lowering device are state furnished and installed by contractor.

NOTES:

1. References:
   - For typical details and locations of conduit connections to light poles, barrier outlet boxes, call boxes, overhead sign lighting, CMS, CCTV and MVDS, see sheets E-160 thru E-162 and E-169.
   - TOS equipment is shown for conduit routing only. For typical details of TOS controller and devices, see sheets E-344 through E-357.
   - For types of pull boxes, splice boxes and enclosures, see sheet E-169.
   - For circuit and conduit/cable tray schedules, see sheets starting at E-401.
2. For Roadway Level Call Boxes, refer to sheet E-396.
3. For Roadway level, Bike Path and Belvedere Lighting Fixture Schedules, see sheets E-146, E-147 and E-165.
4. For Roadway level and Bike Path Call Box Schedule, see sheet E-397.
5. For number of lighting fixtures (main tower lights) see lighting schedule sheets E-271 and E-272.
6. All conduits and fittings routed exposed between the Bike Path and the roadway shall be galvanized rigid steel, PVC coated.
7. See sheets E-160 thru E-165 for conduit locations.
8. For Belvedere lighting fixture installation, see sheet E-173.

REGISTERED PROFESSIONAL ENGINEER — MAXWELL FUMIO TAMAI No. E 8651 Exp. 9/30/2008 ELECTRICAL — STATE OF CALIFORNIA

FOR REVISION ONLY

THIS PLAN ACCURATE FOR ELECTRICAL WORK ONLY.

REQUEST FOR INFORMATION NOT ADDRESSED IN THIS CCO REMAIN IN FORCE

MARK	DATE	REVISIONS DESCRIPTIONS	BY	CH'D	CCO#
1	02/19/08	ELECTRICAL MODIFICATIONS	MP EL	RR	42

CONTRACT CHANGE ORDER NO._____
SHEET_____ OF _____

SAS SUPERSTRUCTURE ROADWAY EASTBOUND
LIGHTING AND ELECTRICAL SYSTEMS

SCALE 1:200

E-140

ALL DIMENSIONS ARE IN METERS UNLESS OTHERWISE SHOWN

FOR REDUCED PLANS ORIGINAL SCALE IS IN MILLIMETERS 0 20 40 60 80

DGN FILE =>T:\13103\MS\pse\SAS Struc\CCO\SAS CCO42\04-0120f1_0193R01.dgn
USERNAME =>llorico

CU 04251 EA 0120F1

DESIGN OVERSIGHT: BEHZAD GOLEMOHAMMADI
CALCULATED/DESIGNED BY: CHECKED BY
DRAWN BY: EDC CYF
DATE REVISED: 08/02 08/02
REVISED BY:
STATE OF CALIFORNIA - DEPARTMENT OF TRANSPORTATION
Caltrans

LAST REVISION 00-00-00
DATE PLOTTED => 3/17/2008
TIME PLOTTED => 4:39:47 PM

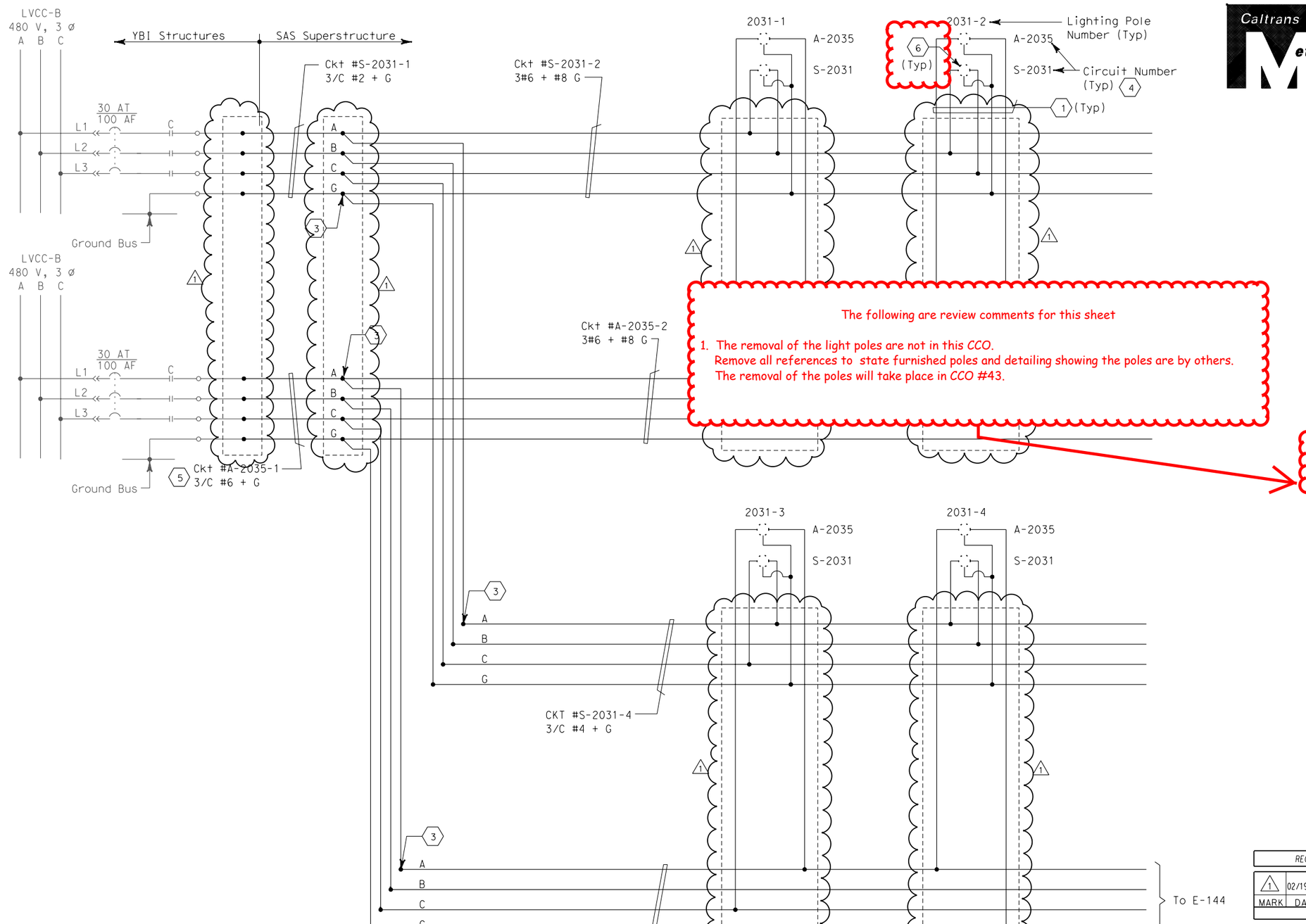

The following are review comments for this sheet

1. The removal of the light poles are not in this CCO.
   Remove all references to state furnished poles and detailing showing the poles are by others.
   The removal of the poles will take place in CCO #43.

SHEET NOTES:

1. 4#10 + #10 G, single conductors.
2. Deleted.
3. Conductors spliced inside junction box located inside girder.
4. For Main Span Roadway Eastbound lighting schedule, see sheet E-168.
5. The Contractor shall extend and coil 5 meters of cable in manhole 25. All cables shall be tagged with circuit numbers as shown.
6. Light pole, luminaires and lowering device are state furnished and installed by contractor.

NOTES:

1. Use multi-conductor cable if circuit is routed via cable trays.
2. References:
   - For LVCC-B single line diagrams, see sheets E-32 to E-34
   - For circuit and conduit/cable tray schedules, see sheets starting at E-401.
3. For SAS Superstructure Roadway Eastbound 480 V Roadway Lighting, see sheets E-135 thru E-140.

DIST	COUNTY	ROUTE	KILOMETER POST TOTAL PROJECT	SHEET No	TOTAL SHEETS
04	SF	80	13.2/13.9	194R1	1204

Jens Erlingsson 12/19/02
REGISTERED ELECTRICAL ENGINEER DATE

12-6-04
PLANS APPROVAL DATE

REGISTERED PROFESSIONAL ENGINEER — JENS ERLINGSSON No. 8249 Exp. 9/30/06 ELECTRICAL — STATE OF CALIFORNIA

PB POWER, Inc.
A Parsons Brinckerhoff Company
303 Second St., Suite 700N
San Francisco, CA 94107-1317

The State of California or its officers or agents shall not be responsible for the accuracy or completeness of electronic copies of this plan sheet.

Caltrans now has a web site! To get to the web site, go to http://www.dot.ca.gov

REGISTERED PROFESSIONAL ENGINEER — MAXWELL FUMIO TAKATA No. E 8651 Exp. 9/30/2008 ELECTRICAL — STATE OF CALIFORNIA

FOR REVISION ONLY

REQUEST FOR INFORMATION NOT ADDRESSED IN THIS CCO REMAIN IN FORCE

MARK	DATE	DESCRIPTIONS	BY	CH'D	CCO#
		REVISIONS			
1	02/19/08	ELECTRICAL MODIFICATIONS	MP EL	RR	42

CONTRACT CHANGE ORDER NO._____
SHEET _____ OF _____

DETAILS
SAS SUPERSTRUCTURE ROADWAY EASTBOUND 480 V ROADWAY LIGHTING WIRING DIAGRAM

NO SCALE

E-143

CALCULATED/ DESIGNED BY	CHECKED BY	DATE	REVISED BY	DATE REVISED
JP	BL	09/01		11/01

DESIGN OVERSIGHT: BEHZAD GOLEMOHAMMADI

STATE OF CALIFORNIA - DEPARTMENT OF TRANSPORTATION — Caltrans

LAST REVISION 00-00-00 — DATE PLOTTED => 3/17/2008 TIME PLOTTED => 4:40:16 PM

FOR REDUCED PLANS ORIGINAL SCALE IS IN MILLIMETERS 0 20 40 60 80

DGN FILE =>T:\13103\MS\pse\SAS Struc\CCO\SAS CCO42\04-0120f1_0194R01.dgn
USERNAME =>llorico

CU 04251 | EA 0120F1

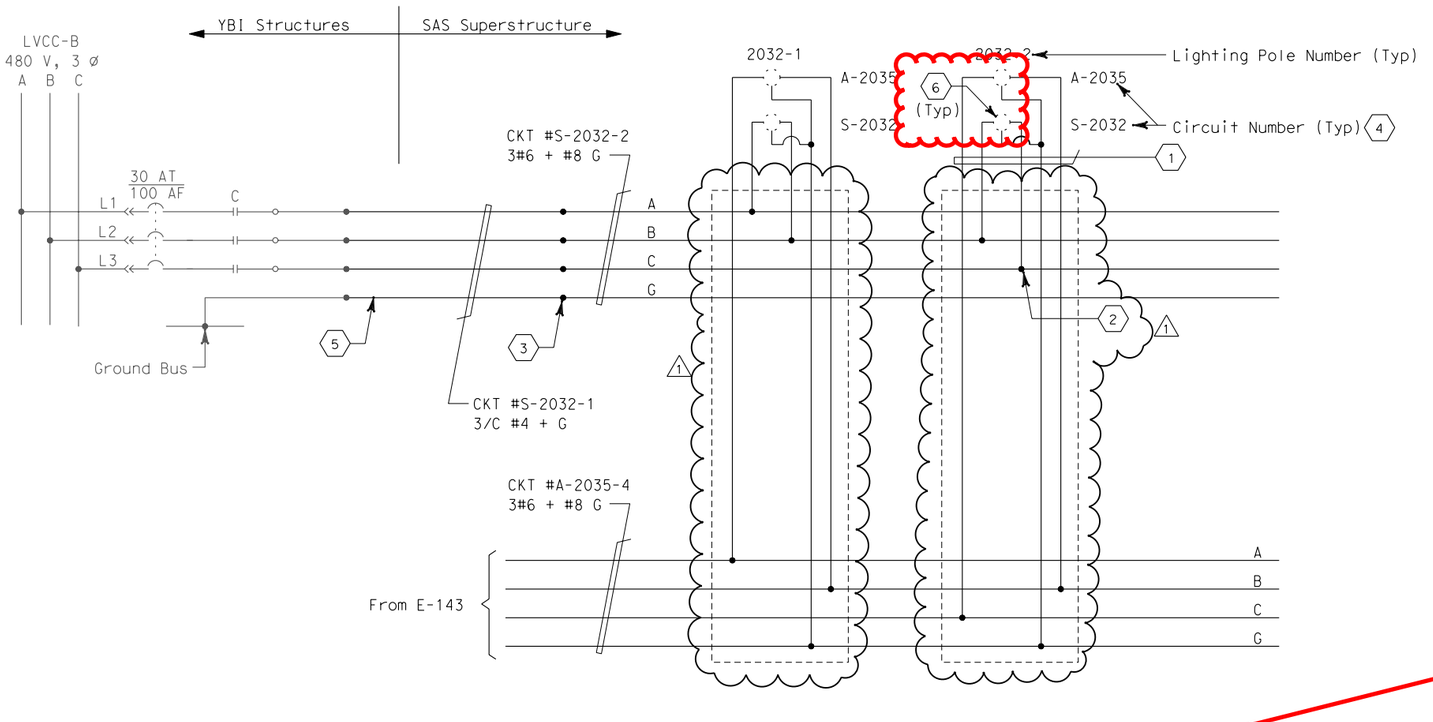

DIST	COUNTY	ROUTE	KILOMETER POST TOTAL PROJECT	SHEET No	TOTAL SHEETS
04	SF	80	13.2/13.9	195R1	1204

REGISTERED ELECTRICAL ENGINEER — 12/19/02 DATE

12-6-04
PLANS APPROVAL DATE

REGISTERED PROFESSIONAL ENGINEER — JENS ERLINGSSON No. 8249 Exp. 9/30/06 ELECTRICAL — STATE OF CALIFORNIA

PB POWER, Inc.
A Parsons Brinckerhoff Company
303 Second St., Suite 700N
San Francisco, CA 94107-1317

The State of California or its officers or agents shall not be responsible for the accuracy or completeness of electronic copies of this plan sheet.

Caltrans now has a web site! To get to the web site, go to http://www.dot.ca.gov

SHEET NOTES:

1. 4#10 + #10 G single conductors.
2. Tape and coil conductors spliced inside pull box PB-LTG. (Pole #2032-2 only). (1)
3. Conductors spliced inside junction box located inside girder.
4. For SAS Superstructure Roadway Eastbound lighting schedule, see sheet E-168.
5. The Contractor shall extend and coil 5 meters of cable in manhole 25. All cables shall be tagged with circuit numbers as shown.
6. Light pole, luminaires and lowering device are state furnished and installed by contractor.

NOTES:

1. Use multi-conductor cable if circuit is routed via cable trays.
2. References:
   - For LVCC-B single line diagrams, see sheets E-32 to E-34
   - For pull box schedules, see sheet E-169
   - For circuit and conduit/cable tray schedules, see sheets starting at E-401.
3. For SAS Superstructure Roadway Eastbound 480 V Roadway Lighting, see sheets E-139 and E-140.

The following are review comments for this sheet

1. The removal of the light poles are not in this CCO.
   Remove all references to state furnished poles and detailing showing the poles are by others.
   The removal of the poles will take place in CCO #43.

REGISTERED PROFESSIONAL ENGINEER — MARNELL FUMIO TAKATA No. E 8651 Exp. 9/30/2008 ELECTRICAL — STATE OF CALIFORNIA

FOR REVISION ONLY

REQUEST FOR INFORMATION NOT ADDRESSED IN THIS CCO REMAIN IN FORCE

MARK	DATE	DESCRIPTIONS	BY	CH'D	CCO#
		REVISIONS			
1	02/19/08	ELECTRICAL MODIFICATIONS	MP EL	RR	42

CONTRACT CHANGE ORDER NO._____
SHEET _____ OF _____

DETAILS
SAS SUPERSTRUCTURE ROADWAY EASTBOUND 480 V ROADWAY LIGHTING WIRING DIAGRAM

NO SCALE

E-144

DATE	REVISED BY
09/01	JP
11/01	BL

CALCULATED/DESIGNED BY
CHECKED BY

DESIGN OVERSIGHT
BEHZAD GOLEMOHAMMADI

STATE OF CALIFORNIA - DEPARTMENT OF TRANSPORTATION
Caltrans

DATE PLOTTED => 3/17/2008
TIME PLOTTED => 4:40:39 PM
LAST REVISION 00-00-00

FOR REDUCED PLANS ORIGINAL SCALE IS IN MILLIMETERS 0 20 40 60 80

DGN FILE =>T:\13103\MS\pse\SAS Struc\CCO\SAS CC042\04-0120f1_0195R01.dgn
USERNAME =>llorico

CU 04251

EA 0120F1

DIST	COUNTY	ROUTE	KILOMETER POST TOTAL PROJECT	SHEET No	TOTAL SHEETS
04	SF	80	13.2/13.9	197R1	1204

REGISTERED ELECTRICAL ENGINEER 12/19/02 DATE

12-6-04
PLANS APPROVAL DATE

PB POWER, Inc.
A Parsons Brinckerhoff Company
303 Second St., Suite 700N
San Francisco, CA 94107-1317

REGISTERED PROFESSIONAL ENGINEER JENS ERLINGSSON No. 8249 Exp. 9/30/06 ELECTRICAL STATE OF CALIFORNIA

The State of California or its officers or agents shall not be responsible for the accuracy or completeness of electronic copies of this plan sheet.

Caltrans now has a web site! To get to the web site, go to http://www.dot.ca.gov

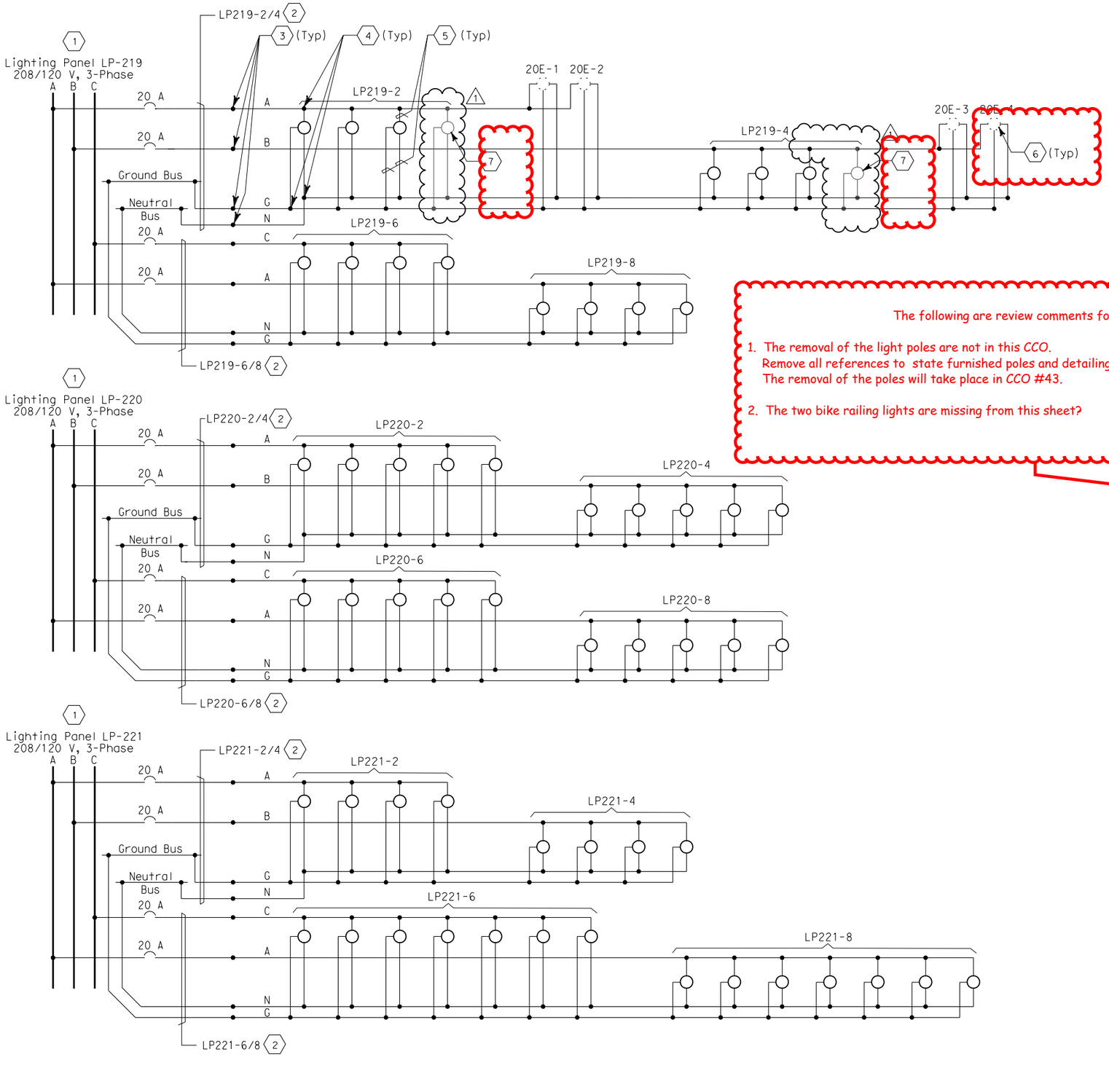

The following are review comments for this sheet

1. The removal of the light poles are not in this CCO.
   Remove all references to state furnished poles and detailing showing the poles are by others.
   The removal of the poles will take place in CCO #43.

2. The two bike railing lights are missing from this sheet?

SHEET NOTES:

1. For lighting panel schedule LP-219, LP-220, LP-221, see sheets E-155 and E-156.
2. Lighting feeder cable is 3/C #6 + G.
3. Conductors spliced inside PB-LTG located in barrier.
4. Conductors spliced inside PB-LTG (PB-9A) located next to bike path.
5. 2#10 + #10 G single conductors.
6. Belvedere light poles and luminaires are state furnished and installed by contractor.
7. Railing lights are contractor furnished and installed by others.

NOTES:

1. For circuit and conduit/cable tray schedules, see sheets starting at E-401.

REGISTERED PROFESSIONAL ENGINEER MAXWELL FUMIO TAKAKI No. E 8651 Exp. 9/30/2008 ELECTRICAL STATE OF CALIFORNIA

FOR REVISION ONLY

REQUEST FOR INFORMATION NOT ADDRESSED IN THIS CCO REMAIN IN FORCE

MARK	DATE	DESCRIPTIONS	BY	CH'D	CCO#
1	02/19/08	ELECTRICAL MODIFICATIONS	MP EL	RR	42

REVISIONS

CONTRACT CHANGE ORDER NO. _____
SHEET _____ OF _____

DETAILS
SAS SUPERSTRUCTURE ROADWAY EASTBOUND
120 V BIKE PATH LIGHTING WIRING DIAGRAMS

NO SCALE

E-146

STATE OF CALIFORNIA - DEPARTMENT OF TRANSPORTATION
Caltrans

DESIGN OVERSIGHT: BEHZAD GOLEMOHAMMADI
CALCULATED/DESIGNED BY: JP DATE 9/01 REVISED BY
CHECKED BY: BL 11/01 DATE REVISED

DATE PLOTTED => 3/17/2008
TIME PLOTTED => 4:41:54 PM
LAST REVISION 00-00-00

FOR REDUCED PLANS ORIGINAL SCALE IS IN MILLIMETERS 0 20 40 60 80

DGN FILE =>T:\13103\MS\pse\SAS Struc\CCO\SAS CCO42\04-0120f1_0197R01.dgn
USERNAME =>llorico

CU 04251 EA 0120F1

UTILITY PANEL UP-205 (CKT #2096)

Location: SAS SUPERSTRUCTURE SERVICE PLATFORM #5

LOAD DESCRIPTION	LTG	REC	OTH.	CB			CB	LTG	REC	OTH.	LOAD DESCRIPTION
Recept (2) Eastbound North Barrier		360		20/1	1	A 2	20/1			10	CB-242A
Spare				20/1	3	B 4	20/1			20	CB-242B, 242C
Recept (2) Service Platform #5		360		20/1	5	C 6	20/1				Spare (1)
Recept (2) Girder		360		20/1	7	A 8	20/1	738			Girder Lighting (18)
RTU #10E (PLC Power Supply)			100	20/1	9	B 10	20/1				Spare
RTU-#10E (Lighting & Receptacle)	105	180	150	20/1	11	C 12	20/1				Spare
TOTAL WATTS	105	1260	250					738		30 (1)	TOTAL VA

LOAD SUMMARY (INCLUDES .90 PF) (VA)

Lighting (At 100%): 843
Gen Use (1st 10 kVA at 100% Plus 50% of remainder): 1540 (1)

TOTAL kVA: 2.383 (1)

BALANCE (kVA)

Phase A - 1.468
Phase B - 0.120
Phase C - 0.795 (1)

VOLTAGE: 208/120 V
PHASE/WIRES: 3-phase, 4-wire
BUS RATING: 100 A
MAIN: 60 A
MOUNTING: Surface
K.A.I.C.: 10

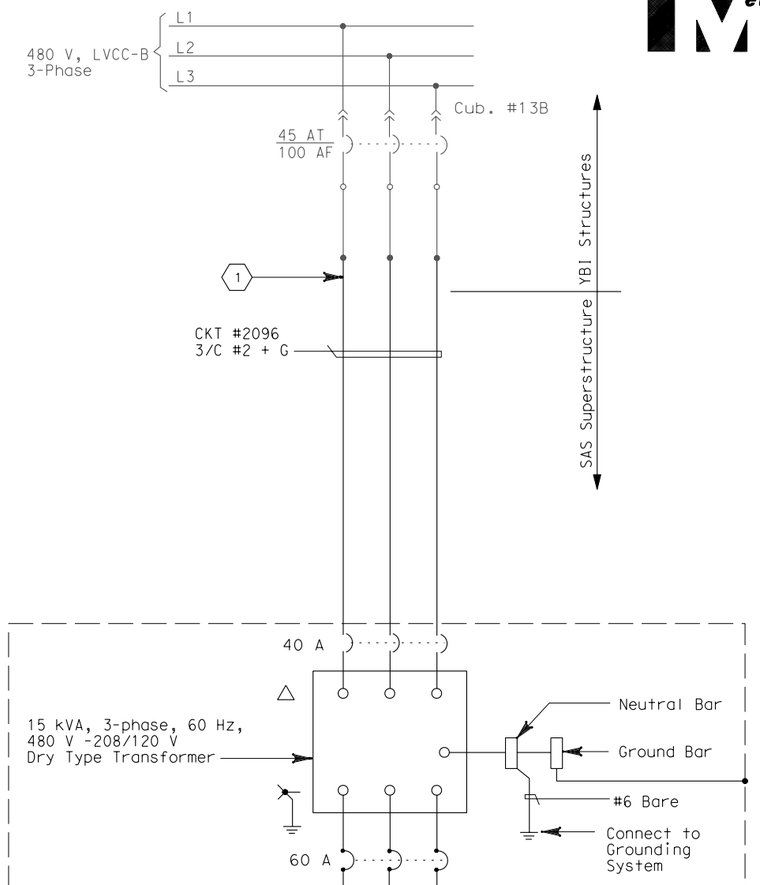

DIST	COUNTY	ROUTE	KILOMETER POST TOTAL PROJECT	SHEET No	TOTAL SHEETS
04	SF	80	13.2/13.9	200R1	1204

James Ellingsson 12/19/02
REGISTERED ELECTRICAL ENGINEER DATE

REGISTERED PROFESSIONAL ENGINEER — JENS ERLINGSSON No. 8249 Exp. 9/30/06 ELECTRICAL — STATE OF CALIFORNIA

12-6-04
PLANS APPROVAL DATE

PB POWER, Inc.
A Parsons Brinckerhoff Company
303 Second St., Suite 700N
San Francisco, CA 94107-1317

The State of California or its officers or agents shall not be responsible for the accuracy or completeness of electronic copies of this plan sheet.

Caltrans now has a web site! To get to the web site, go to http://www.dot.ca.gov

SHEET NOTES:

(1) The Contractor shall extend and coil 5.0 meters of cable in manhole #25. All cables shall be tagged with circuit numbers as shown.

NOTES:

1. The Contractor shall provide nameplates and circuit schedules as shown.
2. Install transformer/panelboard inside a PB-8A enclosure (fiberglass) to be sized by the Contractor.
3. References:
   - For LVCC-B single line diagram, see sheets E-32 thru E-34.
   - For circuit and conduit/cable tray schedules, see sheets starting at E-401.
   - For pull box schedule, see sheet E-169.

REGISTERED PROFESSIONAL ENGINEER — MAXWELL FUMIO TAKAHASHI No. E 8651 Exp. 9/30/2008 ELECTRICAL — STATE OF CALIFORNIA

FOR REVISION ONLY

REQUEST FOR INFORMATION NOT ADDRESSED IN THIS CCO REMAIN IN FORCE

MARK	DATE	REVISIONS	BY	CH'D	CCO#
1	02/19/08	ELECTRICAL MODIFICATIONS	MP EL	RR	42

CONTRACT CHANGE ORDER NO._____
SHEET _____ OF _____

DETAILS
SAS SUPERSTRUCTURE ROADWAY EASTBOUND PANEL UP-205 SCHEDULE
NO SCALE

E-151

REVISED BY	DATE	CALCULATED/ DESIGNED BY	CHECKED BY
	7/01	JP	BL
	12/01		

DESIGN OVERSIGHT: BEHZAD GOLEMOHAMMADI

STATE OF CALIFORNIA - DEPARTMENT OF TRANSPORTATION
Caltrans

LAST REVISION 00-00-00 | DATE PLOTTED => 3/17/2008 | TIME PLOTTED => 4:42:30 PM

FOR REDUCED PLANS ORIGINAL SCALE IS IN MILLIMETERS 0 20 40 60 80

DGN FILE =>T:\13103\MS\pse\SAS Struc\CCO\SAS CC042\04-0120f1_0200R01.dgn
USERNAME =>llorico

CU 04251 | EA 0120F1

DIST	COUNTY	ROUTE	KILOMETER POST TOTAL PROJECT	SHEET No	TOTAL SHEETS
04	SF	80	13.2/13.9	204R1	1204

Jens Erlingsson 12/19/02
REGISTERED ELECTRICAL ENGINEER DATE

12-6-04
PLANS APPROVAL DATE

REGISTERED PROFESSIONAL ENGINEER JENS ERLINGSSON No. 8249 Exp. 9/30/06 ELECTRICAL STATE OF CALIFORNIA

PB POWER, Inc.
A Parsons Brinckerhoff Company
303 Second St., Suite 700N
San Francisco, CA 94107-1317

The State of California or its officers or agents shall not be responsible for the accuracy or completeness of electronic copies of this plan sheet.

Caltrans now has a web site! To get to the web site, go to http://www.dot.ca.gov

Caltrans Metric

LIGHTING PANEL LP-219 (CKT #2103)

LOCATION: SAS SUPERSTRUCTURE SERVICE PLATFORM #4

LOAD DESCRIPTION	LTG	CB		CB	LTG	LOAD DESCRIPTION
Spare		20/1	1 A 2	20/1	162 (1)	Bike Path LTG (4) Belvedere (2) (2) (1)
		20/1	3 B 4	20/1	162 (1)	Bike Path LTG (4) Belvedere (2) (2) (1)
		20/1	5 C 6	20/1	216	Bike Path LTG (4)
		20/1	7 A 8	20/1	216	Bike Path LTG (4)
		20/1	9 B 10	20/1		Spare
		20/1	11 C 12	20/1		
TOTAL VA					756 (1)	TOTAL VA

LOAD SUMMARY (INCLUDES .90 PF) (VA)
LIGHTING (AT 100%): 756 (1)

BALANCE (kVA)
Phase A - 0.378 (1)
Phase B - 0.162
Phase C - 0.216

VOLTAGE: 208/120 V
PHASE/WIRES: 3-phase, 4-wire
BUS RATING: 100 A
MAIN: 60 A
MOUNTING: Surface
K.A.I.C.: 10

TOTAL kVA: 0.756 (1)

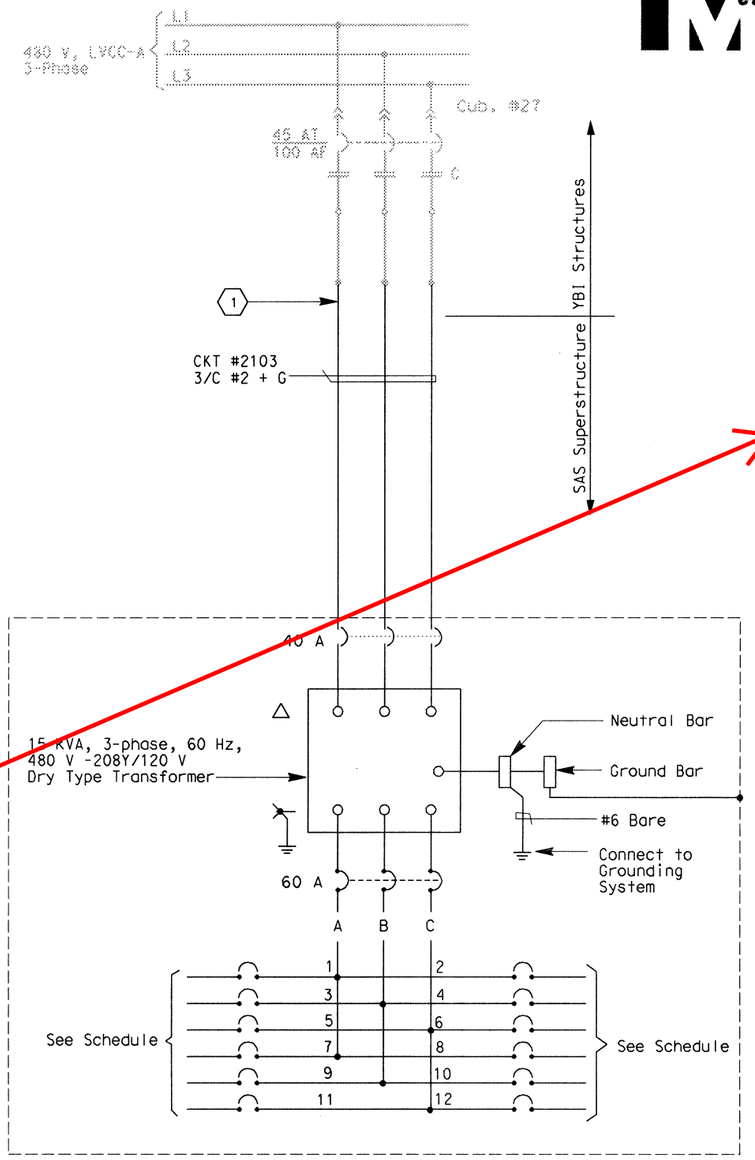

The following are review comments for this sheet

1. This sheet was missing from the last updated CCO # 42 Set.
There are still items that are associated with this CCO included in this sheet.

SHEET NOTES:

(1) The Contractor shall extend and coil 5.0 meters of cable in M.H.#25 All cables shall be tagged with circuit numbers as shown.

(2) Installation of Belvedere additional loads by others.

NOTES:

1. The Contractor shall provide nameplates and circuit schedules as shown.
2. Install transformer/panelboard inside a PB-8A enclosure (fiberglass) to be sized by the Contractor.
3. References:
   - For LVCC-A single line diagram, see sheets E-29 thru E-31.
   - For circuit and conduit/cable tray schedules, see sheets starting at E-401.
   - For pull box schedule, see sheet E-169.

REGISTERED PROFESSIONAL ENGINEER MAXWELL FUMIO TAKAKI No. E 8651 Exp. 9/30/2008 ELECTRICAL STATE OF CALIFORNIA

FOR REVISION ONLY

REQUEST FOR INFORMATION NOT ADDRESSED IN THIS CCO REMAIN IN FORCE

MARK	DATE	DESCRIPTIONS	BY	CH'D	CCO#
1	02/19/08	ELECTRICAL MODIFICATIONS	MP EL	RR	42

REVISIONS

CONTRACT CHANGE ORDER NO._____
SHEET _____ OF _____

This Sheet is missing from this Update Package.

DETAILS
SAS SUPERSTRUCTURE ROADWAY EASTBOUND PANEL LP-219 SCHEDULE
NO SCALE

E-155

STATE OF CALIFORNIA - DEPARTMENT OF TRANSPORTATION
Caltrans

DESIGN OVERSIGHT: BEHZAD GOLEMOHAMMADI
CALCULATED/DESIGNED BY: JP DATE 09/01
CHECKED BY: BL 11/01
REVISED BY
DATE REVISED

FOR REDUCED PLANS ORIGINAL 0 20 40 60 80
DGN FILE =>t:\13103\ms\pse\sas struc\cco\sas cco42\04-0120f1_0204r01.dgn
USERNAME =>\ecchirto
CU 04251
EA 0120F1
LAST REVISION
DATE PLOTTED => 2/19/2008

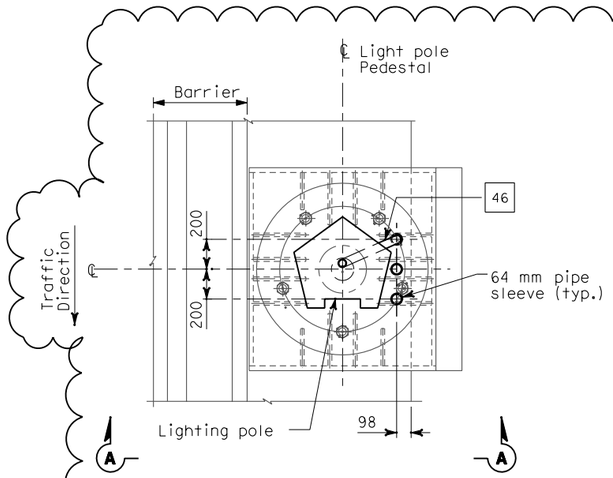

PLAN

CONDUIT STUB-UP PLAN FOR ROADWAY LIGHTING ON A METAL BASE
SCALE 1:20

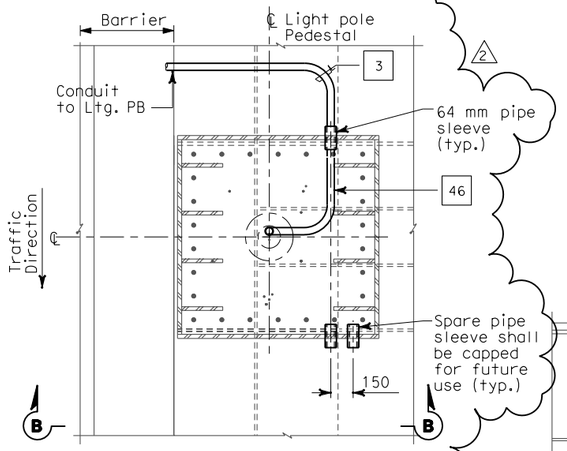

PLAN

CONDUIT STUB-UP PLAN FOR ROADWAY LIGHTING ON A METAL BASE AT PIER E2 ONLY
SCALE 1:20

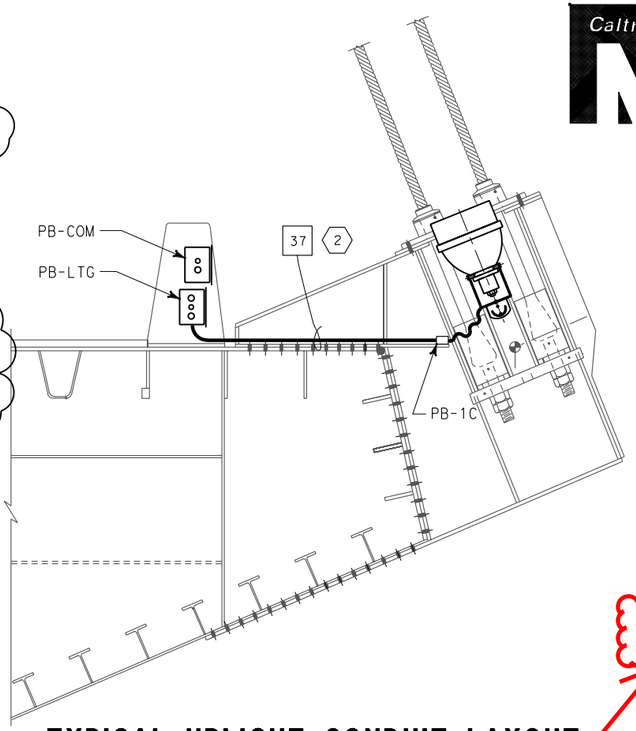

TYPICAL UPLIGHT CONDUIT LAYOUT

SCALE 1:20

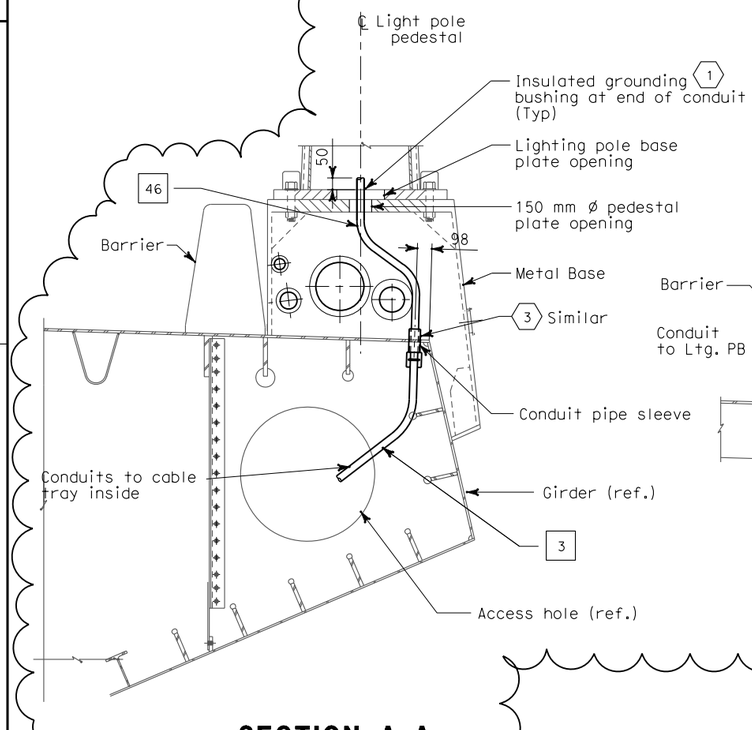

SECTION A-A

LIGHT POLE METAL PEDESTAL CONDUIT TYPICAL INSTALLATION
SCALE 1:20

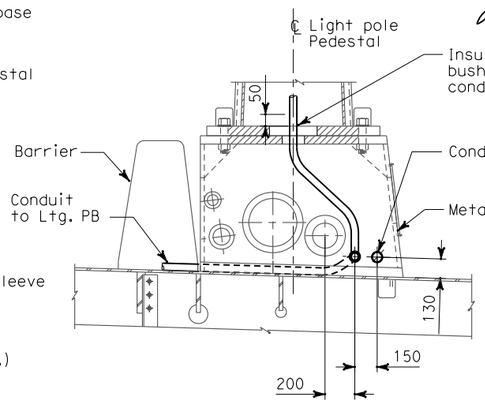

SECTION B-B

SCALE 1:20

SHEET NOTES:

1. Bond grounding bushing to ground lug of lighting pole with #6 bare copper wire.
2. Conduit shall be clear of all piping and pipe sleeve. Route conduit on top of deck plate, outside of girder box.
3. See Utility Detail No. 1 (Sheet No. 965 of 1204) for conduit penetration through girder plate and lighting pole metal base. The Contractor shall install sealant between the sleeve and conduit for future light pipe, plug and cap sleeve to prevent water or moisture from passing inside the sleeve.

NOTES:

1. References:
   - For lighting pole schedule, see sheet E-168.
   - For location of pull boxes inside girder, see sheets E-181 thru E-186.
   - For luminaire support details, see structural sheets.

The following are review comments for this sheet

1. Marks from previous CCO's are to be removed when a new CCO modifies the sheet. See CCO guidelines.

FOR REVISION ONLY

DIST	COUNTY	ROUTE	KILOMETER POST TOTAL PROJECT	SHEET No	TOTAL SHEETS
04	SF	80	13.2/13.9	208R2	1204

Jens Erlingsson 12/19/02
REGISTERED ELECTRICAL ENGINEER DATE

12-6-04
PLANS APPROVAL DATE

REGISTERED PROFESSIONAL ENGINEER — JENS ERLINGSSON No. 8249 Exp. 9/30/06 ELECTRICAL — STATE OF CALIFORNIA

PB POWER, Inc.
A Parsons Brinckerhoff Company
303 Second St., Suite 700N
San Francisco, CA 94107-1317

The State of California or its officers or agents shall not be responsible for the accuracy or completeness of electronic copies of this plan sheet.

Caltrans now has a web site! To get to the web site, go to http://www.dot.ca.gov

REGISTERED PROFESSIONAL ENGINEER — MAXWELL FUMIO TAKATA No. E 8651 Exp. 9/30/2008 ELECTRICAL — STATE OF CALIFORNIA

MARK	DATE	DESCRIPTIONS	REV	CH'D	CCO#
		REVISIONS			
2	02/19/08	ELECTRICAL MODIFICATIONS	MP EL RG	RR	42
1	10/16/06	REVISED SHEET NOTES	LR	MG	11

REQUEST FOR INFORMATION NOT ADDRESSED IN THIS CCO REMAIN IN FORCE

CONTRACT CHANGE ORDER NO. _____
SHEET _____ OF _____

DETAILS
SAS SUPERSTRUCTURE ROADWAY EASTBOUND CONDUIT LOCATIONS

SCALE AS NOTED

E-161

DESIGNED BY	CHECKED BY	CALCULATED/ DESIGNED BY	DATE	REVISED BY	DATE REVISED
BEHZAD GOLEMOHAMMADI	AB	KG	10/01		
			11/01		

DESIGN OVERSIGHT
STATE OF CALIFORNIA - DEPARTMENT OF TRANSPORTATION
Caltrans

ALL DIMENSIONS ARE IN MILLIMETERS UNLESS OTHERWISE SHOWN.

FOR REDUCED PLANS ORIGINAL SCALE IS IN MILLIMETERS 0 20 40 60 80

DGN FILE =>T:\13103\MS\pse\SAS Struc\CCO\SAS CCO42\04-0120f1_0208R02.dgn
USERNAME =>llorico
CU 04251
EA 0120F1

LAST REVISION 00-00-00
DATE PLOTTED => 3/17/2008
TIME PLOTTED => 4:43:03 PM

DIST	COUNTY	ROUTE	KILOMETER POST TOTAL PROJECT	SHEET No	TOTAL SHEETS
04	SF	80	13.2/13.9	209R1	1204

REGISTERED ELECTRICAL ENGINEER — 12/19/02 DATE

REGISTERED PROFESSIONAL ENGINEER — JENS ERLINGSSON No. 8249 Exp. 9/30/06 ELECTRICAL — STATE OF CALIFORNIA

12-6-04
PLANS APPROVAL DATE

PB POWER, Inc.
A Parsons Brinckerhoff Company
303 Second St., Suite 700N
San Francisco, CA 94107-1317

The State of California or its officers or agents shall not be responsible for the accuracy or completeness of electronic copies of this plan sheet.

Caltrans now has a web site! To get to the web site, go to http://www.dot.ca.gov

Caltrans Metric

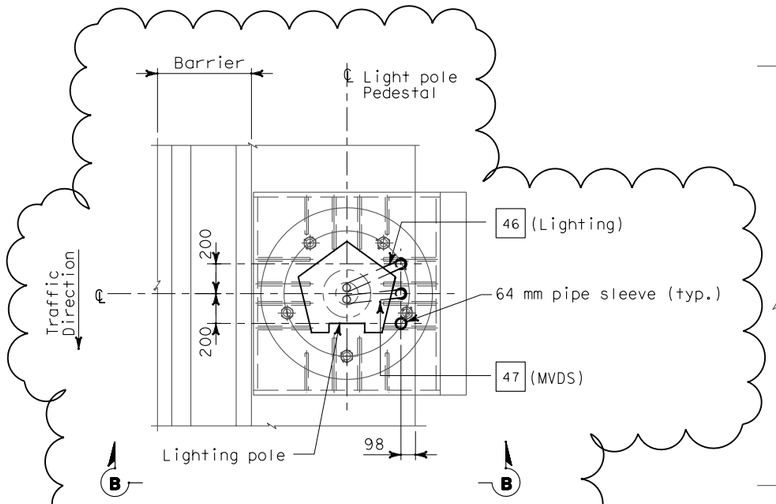

PLAN
CONDUIT STUB-UP PLAN FOR ROADWAY LIGHTING AND MVDS ON METAL BASE
SCALE 1:20

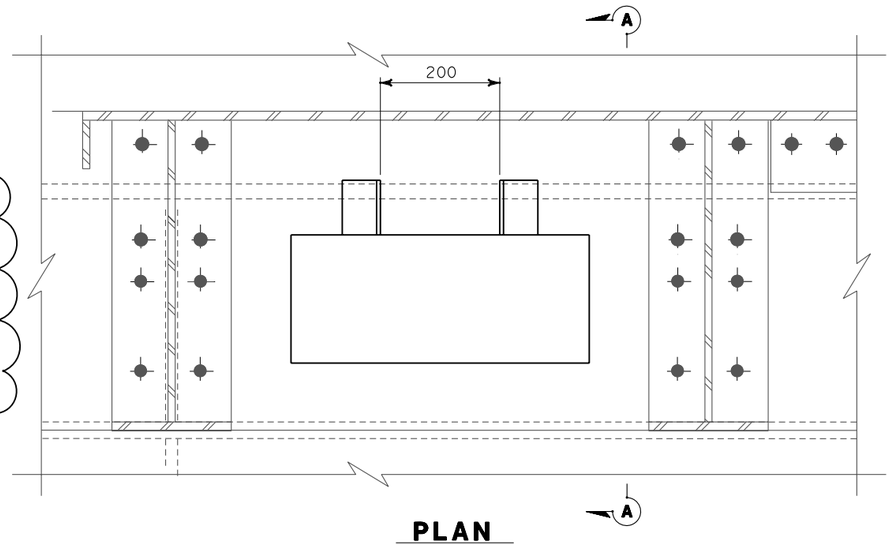

PLAN
PULL BOX IN STEEL BARRIER
SCALE 1:5

SHEET NOTES:

1. Bond grounding bushing to ground lug of lighting pole with #6 bare copper wire.
2. Deleted
3. Conduit penetration thru girder plate and lighting pole metal base, see Utility Detail No. 1 of Superstructure and Tower Drawings. To prevent moisture from passing inside the sleeve, the Contractor shall install sealant between the sleeve and conduit.

NOTES:

1. References:
   - For installation and typical details of TOS equipment, see sheets E-341 thru E-357.
   - For pull box schedule, see sheet E-169

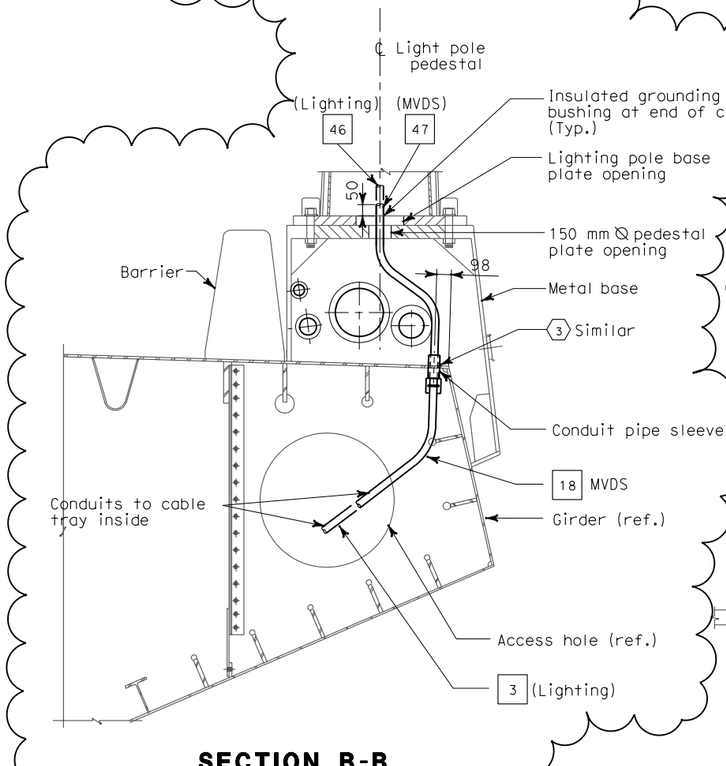

SECTION B-B
SCALE 1:20

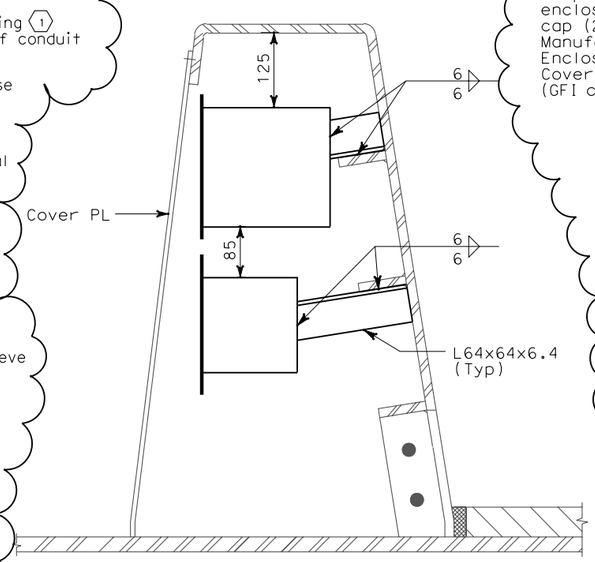

SECTION A-A
SCALE 1:5

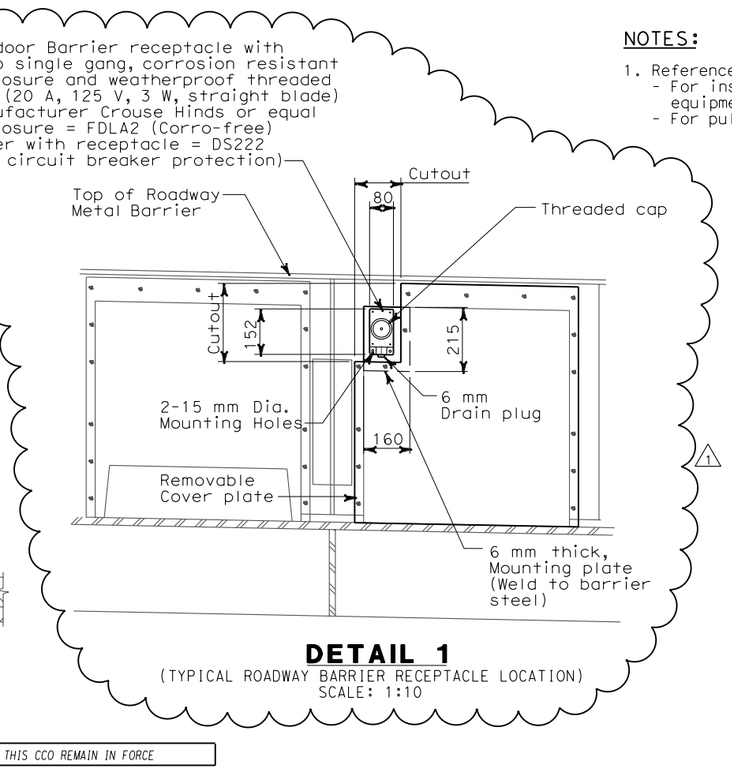

DETAIL 1
(TYPICAL ROADWAY BARRIER RECEPTACLE LOCATION)
SCALE: 1:10

REGISTERED PROFESSIONAL ENGINEER — MARRELL FUMIO TAKAKI No. E 8651 Exp. 9/30/2008 ELECTRICAL — STATE OF CALIFORNIA

REGISTERED ELECTRICAL ENGINEER
FOR REVISION ONLY

REQUEST FOR INFORMATION NOT ADDRESSED IN THIS CCO REMAIN IN FORCE

MARK	DATE	REVISIONS	MP EL RG BY	RR CH'D	42 CCO#
1	02/19/08	ELECTRICAL MODIFICATIONS			

CONTRACT CHANGE ORDER NO._____
SHEET_____ OF _____

DETAILS
SAS SUPERSTRUCTURE ROADWAY EASTBOUND CONDUIT LOCATIONS

SCALE AS NOTED

E-162

CALCULATED/ DESIGNED BY	DATE	REVISED BY	DATE REVISED
KG	10/01		
CHECKED BY		AB	11/01

STATE OF CALIFORNIA - DEPARTMENT OF TRANSPORTATION
Caltrans
DESIGN OVERSIGHT
BEHZAD GOLEMOHAMMADI

LAST REVISION 00-00-00
DATE PLOTTED => 3/17/2008
TIME PLOTTED => 4:43:24 PM

FOR REDUCED PLANS ORIGINAL SCALE IS IN MILLIMETERS 0 20 40 60 80

DGN FILE =>T:\13103\MS\pse\SAS Struc\CCO\SAS CCO42\04-0120f1_0209R01.dgn
USERNAME =>llorico
CU 04251
EA 0120F1

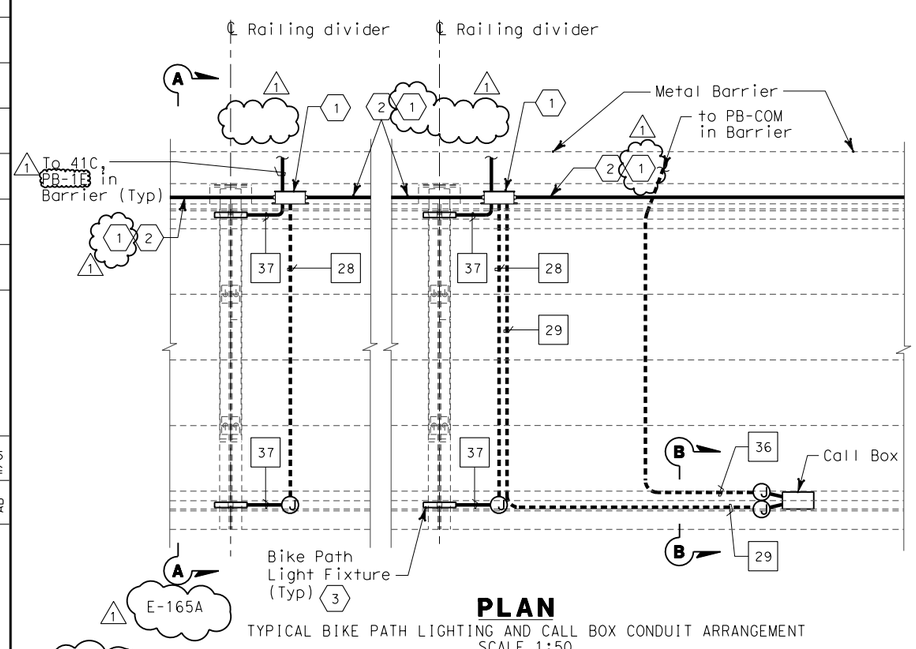

PLAN

TYPICAL BIKE PATH LIGHTING AND CALL BOX CONDUIT ARRANGEMENT
SCALE 1:50

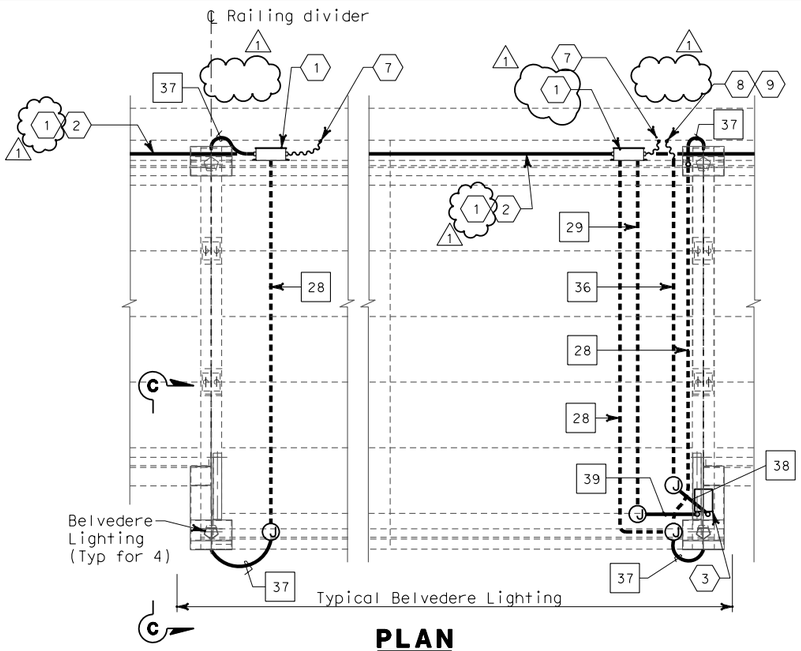

PLAN

CONDUIT ARRANGEMENT
SCALE 1:50

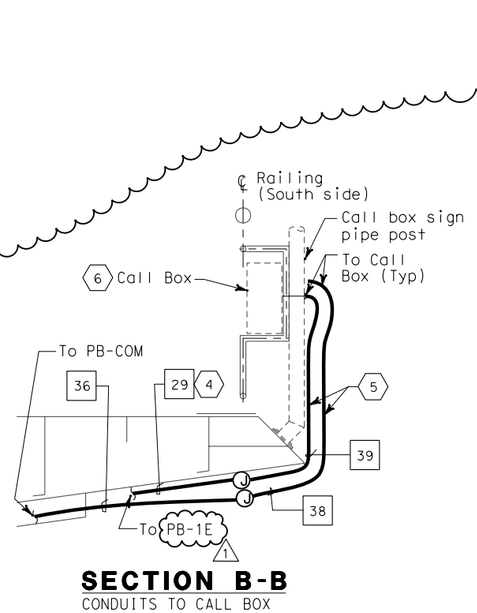

SECTION B-B

CONDUITS TO CALL BOX
SCALE 1:20

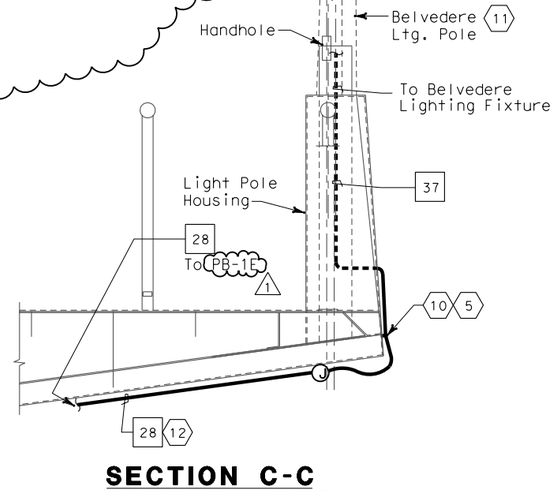

SECTION C-C

CONDUITS TO BELVEDERE LIGHTING
SCALE 1:20

DIST	COUNTY	ROUTE	KILOMETER POST TOTAL PROJECT	SHEET No	TOTAL SHEETS
04	SF	80	13.2/13.9	210R1	1204

Jens Erlingsson 12/19/02
REGISTERED ELECTRICAL ENGINEER DATE

12-6-04
PLANS APPROVAL DATE

REGISTERED PROFESSIONAL ENGINEER — JENS ERLINGSSON No. 8249 Exp. 9/30/06 ELECTRICAL — STATE OF CALIFORNIA

PB POWER, Inc.
A Parsons Brinckerhoff Company
303 Second St., Suite 700N
San Francisco, CA 94107-1317

The State of California or its officers or agents shall not be responsible for the accuracy or completeness of electronic copies of this plan sheet.

Caltrans now has a web site! To get to the web site, go to http://www.dot.ca.gov

SHEET NOTES:

1. PB-1E and conduit support, mounting details see sheet E-165A.
2. 41C, continued to the next PB-1E mounted along side at Bike Path deck. 1
3. For bike path light detail, see sheet E-172.
4. Weld connectors for conduit support under bike path.
5. Field locate support for metal-clad cable.
6. For connection and mounting details of call box on railings, refer to structural railing details.
7. 41C flex to Roadway concrete barrier PB-LTG.
8. 41C flex to Roadway concrete barrier PB-COM.
9. Provide reducer as required.
10. For connection and mounting details, see sheet E-172. Metal clad cable is supplied and part of Bike Path lighting assembly. Cable is shown solid for detail clarity only.
11. For details of Belvedere, see sheet E-173.
12. Weld connectors for conduit support under Bike Path. Field to locate support for conduit as required.

NOTES:

1. All exposed conduits and fittings installed between the roadway and the bike path shall be PVC coated galvanized steel.
2. See sheets E-135 through E-140 for SAS Superstructure Roadway Plans.

DETAILS
SAS SUPERSTRUCTURE ROADWAY EASTBOUND
TYPICAL BIKE PATH PLANS AND SECTIONS

SCALE AS NOTED

E-165

REGISTERED PROFESSIONAL ENGINEER — MAXWELL FUMIO TAKATA No. E 8651 Exp. 9/30/2008 ELECTRICAL — STATE OF CALIFORNIA

FOR REVISION ONLY

REQUEST FOR INFORMATION NOT ADDRESSED IN THIS CCO REMAIN IN FORCE

MARK	DATE	DESCRIPTIONS	MP EL BY	RR CH'D	CCO#
		REVISIONS			
1	02/19/08	ELECTRICAL MODIFICATIONS			42

CONTRACT CHANGE ORDER NO._____
SHEET_____ OF _____

CALCULATED/ DESIGNED BY	CHECKED BY
KG	AB

DATE	REVISED BY	DATE REVISED
10/01		11/01

STATE OF CALIFORNIA - DEPARTMENT OF TRANSPORTATION
Caltrans
DESIGN OVERSIGHT
BEHZAD GOLEMOHAMMADI

ALL DIMENSIONS ARE IN MILLIMETERS UNLESS OTHERWISE SHOWN.

FOR REDUCED PLANS ORIGINAL SCALE IS IN MILLIMETERS 0 20 40 60 80

DGN FILE =>T:\13103\MS\pse\SAS Struc\CCO\SAS CC042\04-0120f1_02 10R01.dgn
USERNAME =>llorico

CU 04251

EA 0120F1

LAST REVISION 00-00-00
DATE PLOTTED => 3/17/2008
TIME PLOTTED => 4:43:52 PM

DIST	COUNTY	ROUTE	KILOMETER POST TOTAL PROJECT	SHEET No	TOTAL SHEETS
04	SF	80	13.2/13.9	210S1	1204

8-24-07
REGISTERED ELECTRICAL ENGINEER DATE

REGISTERED PROFESSIONAL ENGINEER — MARRELL FUMIO TAKAKI — No. E 8651 — Exp. 9/30/2008 ELECTRICAL — STATE OF CALIFORNIA

PLANS APPROVAL DATE

PB AMERICAS, Inc.
A Parsons Brinckerhoff Company
303 Second St., Suite 700N
San Francisco, CA 94107-1317

The State of California or its officers or agents shall not be responsible for the accuracy or completeness of electronic copies of this plan sheet.

To get to the web site, go to: http://www.dot.ca.gov

Caltrans Metric

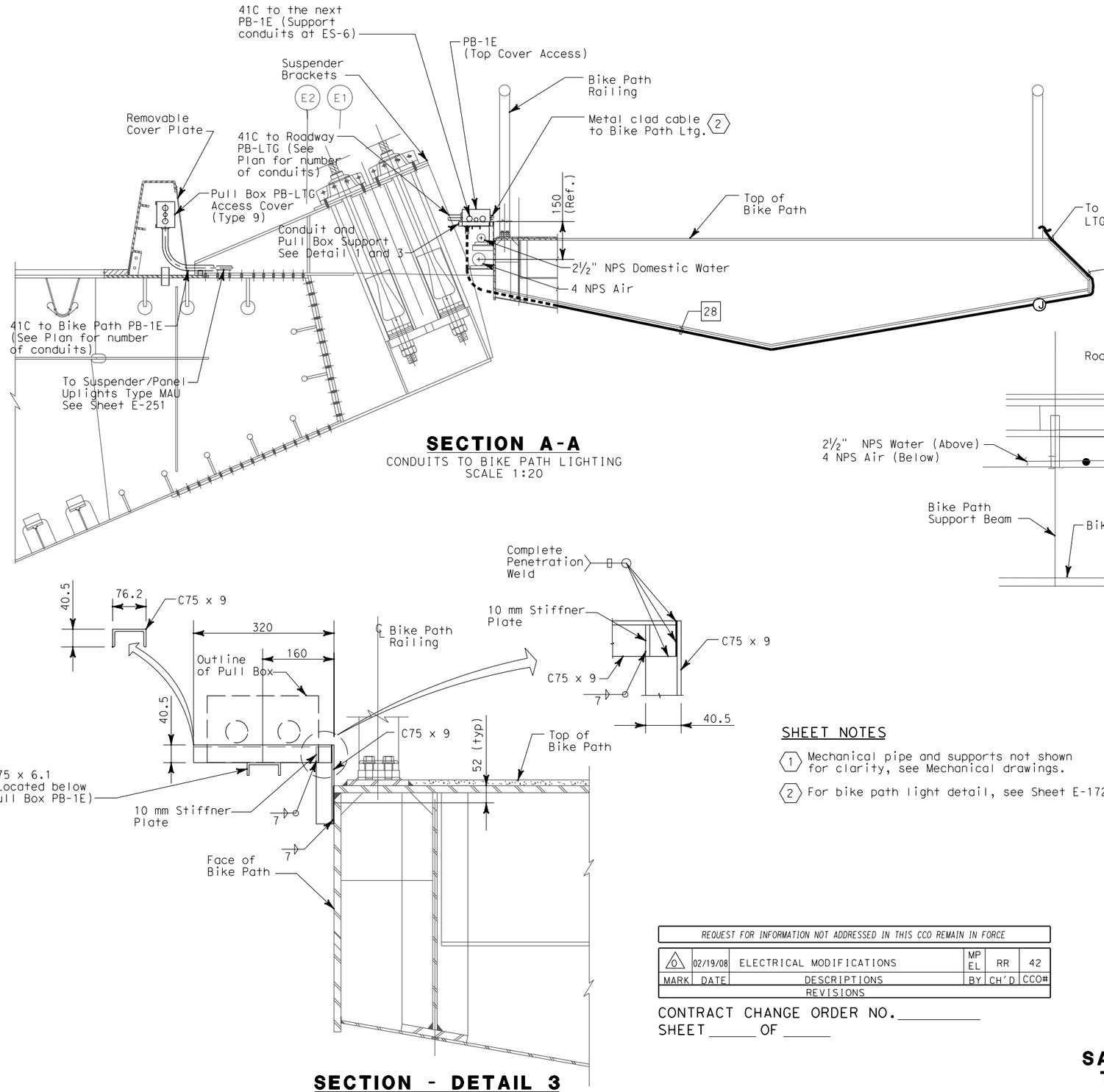

SECTION A-A
CONDUITS TO BIKE PATH LIGHTING
SCALE 1:20

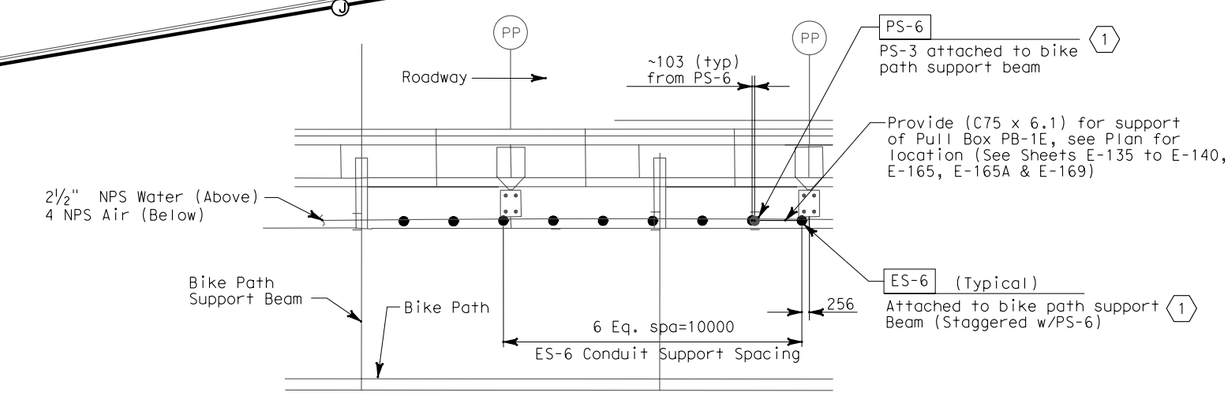

PLAN - DETAIL 1
TYPICAL CONDUIT SUPPORT
SCALE 1:10

SECTION - DETAIL 3
CONDUIT AND PULL BOX SUPPORT
SCALE 1:5

SHEET NOTES
1. Mechanical pipe and supports not shown for clarity, see Mechanical drawings.
2. For bike path light detail, see Sheet E-172.

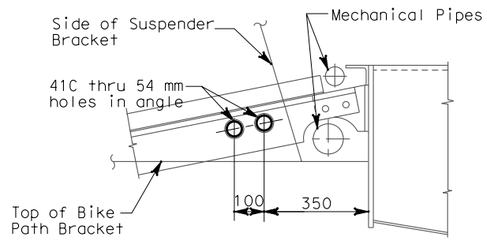

SECTION - DETAIL 2
LOCATION OF CONDUIT AT EMERGENCY ACCESS PLATFORM
SCALE 1:10

REQUEST FOR INFORMATION NOT ADDRESSED IN THIS CCO REMAIN IN FORCE					
0	02/19/08	ELECTRICAL MODIFICATIONS	MP EL	RR	42
MARK	DATE	DESCRIPTIONS	BY	CH'D	CCO#
REVISIONS					

CONTRACT CHANGE ORDER NO._____
SHEET _____ OF _____

DETAILS
SAS SUPERSTRUCTURE ROADWAY EASTBOUND
TYPICAL BIKE PATH PLANS AND SECTIONS
SCALE AS NOTED

E-165A

THIS PLAN ACCURATE FOR ELECTRICAL WORK ONLY.

ALL DIMENSIONS ARE IN MILLIMETERS UNLESS OTHERWISE SHOWN

FOR REDUCED PLANS ORIGINAL SCALE IS IN MILLIMETERS 0 20 40 60 80

DGN FILE =>T:\13103\MS\pse\SAS Struc\CCO\SAS CC042\04-0120f1_0210S01.dgn
USERNAME =>llorico

CU 04251

EA 0120F1

STATE OF CALIFORNIA - DEPARTMENT OF TRANSPORTATION
Caltrans
DESIGN OVERSIGHT
BEHZAD GOLEMOHAMMADI

CALCULATED/ DESIGNED BY	DATE 2/07	REVISED BY
CHECKED BY	7/07	DATE REVISED
	EL	
	RR	

LAST REVISION 00-00-00
DATE PLOTTED => 3/17/2008
TIME PLOTTED => 4:58:11 PM

LIGHTING POLE SCHEDULE

Circuit Number	Pole Number	Station	Location: Roadway side	Mounting Height (M)	Ltg. Fixture Type	Number/ Wattage	Remarks (Mounting Provisions)
S-2031	2031-1	55+89	North	20	MSR-2B-L	3-400 W	Pole mounted
A-2035					MAM-3	1-250 W	
S-2031	2031-2	56+29	North	20	MSR-2B-L	3-400 W	Pole mounted
A-2035					MAM-3	1-250 W	
S-2031	2031-3	59+99	North	20	MSR-2-L	2-400 W	Pole mounted
					MSR-2B-L	2-400 W	
A-2035					MAM-3	1-250 W	
S-2031	2031-4	60+49	North	20	MSR-2-L	2-400 W	Pole mounted
S-2031					MSR-2B-L	2-400 W	
A-2035					MAM-3	1-250 W	
S-2032	2032-1	61+01	North	20	MSR-2-L	2-400 W	Pole mounted
					MSR-2B-L	2-400 W	
A-2035					MAM-3	1-250 W	
S-2032	2032-2	61+54	North	20	MSR-2-L	2-400 W	Pole mounted
					MSR-2B-L	2-400 W	
A-2035					MAM-3	1-250 W	

(1)

BELVEDERE LIGHTING POLE AND FIXTURE SCHEDULE (1)

Circuit Number	Pole Number	Location	Mounting Height (M)	Ltg. Fixture Type	Number/ Wattage
LP219-2	20E-1	Belvedere 20E	4.3	MSV	2-35 W
LP219-2	20E-2		4.3	MSV	2-35 W
LP219-4	20E-3		4.3	MSV	2-35 W
LP219-4	20E-4		4.3	MSV	2-35 W
LP223-6	22E-1	Belvedere 22E	4.3	MSV	2-35 W
LP223-6	22E-2		4.3	MSV	2-35 W
LP223-8	22E-3		4.3	MSV	2-35 W
LP223-8	22E-4		4.3	MSV	2-35 W

(2)

PIER 1 MAIN TOWER LIGHTS SCHEDULE (ROADWAY LEVEL)

Circuit Number	Station	Location: Roadway side	Location: Suspend at Panel Point	Mounting	Ltg. Fixture Type	Number/ Wattage	Remarks
PYLON LIGHTING							
A-3039	57+34	North	PP-35/36	Bridge deck	MAT-1B-D	2-1000 W	with Remote Ballast
A-3039	57+36	North	PP-36	Bridge deck	MAT-1C-D	1-1000 W	with Remote Ballast
A-3039	57+42	North	PP-36/37	Bridge deck	MAT-1A-D	2-1000 W	with Remote Ballast
A-3039	57+55	North	PP-39	Bridge deck	MAT-3-D	2-250 W	with Remote Ballast
A-3039	57+60	North	PP-40	Bridge deck	MAT-3-RC	2-250 W	with Remote Ballast
A-3039	57+66.7	South	West of PP-42	Bridge deck	MAT-1A-D	1-1000 W (1)	with Remote Ballast
		(1)	(1)				
A-3040	58+05	North	PP-48/49	Bridge deck	MAT-1B-D	2-1000 W	with Remote Ballast
A-3040	58+03	North	PP-48	Bridge deck	MAT-1C-D	1-1000 W	with Remote Ballast
A-3040	57+97	North	PP-47/48	Bridge deck	MAT-1A-D	2-1000 W	with Remote Ballast
A-3040	57+84	North	PP-45	Bridge deck	MAT-3-D	2-250 W	with Remote Ballast
A-3040	57+79	North	PP-44	Bridge deck	MAT-3-RC	2-250 W	with Remote Ballast
A-3040	57+71.7	South	East of PP-42	Bridge deck	MAT-1A-D	1-1000 W (1)	with Remote Ballast
	(1)		(1)				

LIGHTING FIXTURE TYPE DESIGNATION (1)

Example: MSR-2B-C (See Special provisions for additional information)
MSR = SAS Safety light
-2B = 400 Watts
-C Beam Angles

Location (Letter)		Function (Letter)		Application (Letter)		Number/ Lamp Wattage		Beam Angles (Letter)		Mounting Type (Letter)	
M	SAS	A	Aesthetic light	D	Downward flood light	1	1000 W	A		C	Cable
		S	Safety light	U	Upward flood light	2	400 W	B		D	Roadway deck
				R	Roadway light	3	250 W	C		PB	Pier Base/ Pole mount
				T	Pylon flood light	4	175 W			RC	Roadway at Cross beam
				M	Marker light	5	100 W			P	Pole mounted without lower/raiser
				P	Pylon marker light	6	50 W			L	Pole mounted with lower/raiser
				B	Bike path light						
				V	Belvedere light						
				L	Light pipe						

BIKE PATH FIXTURE SCHEDULE

Location	Mounting	Ltg. Fixture Type	Number/ Wattage	Remarks
Bike Path Structure	Bike Path Railway	MSB	1-40 W	Compact Fluorescent

Caltrans Metric

DIST	COUNTY	ROUTE	KILOMETER POST TOTAL PROJECT	SHEET No	TOTAL SHEETS
04	SF	80	13.2/13.9	211R1	1204

Jens Erlingsson 12/19/02
REGISTERED ELECTRICAL ENGINEER DATE

12-6-04
PLANS APPROVAL DATE

REGISTERED PROFESSIONAL ENGINEER — JENS ERLINGSSON No. 8249 Exp. 9/30/06 ELECTRICAL — STATE OF CALIFORNIA

PB POWER, Inc.
A Parsons Brinckerhoff Company
303 Second St., Suite 700N
San Francisco, CA 94107-1317

The State of California or its officers or agents shall not be responsible for the accuracy or completeness of electronic copies of this plan sheet.

Caltrans now has a web site! To get to the web site, go to http://www.dot.ca.gov

NOTES:

1. References:
   - For roadway level lighting wiring diagram, see sheets E-143 thru E-145.
   - For roadway level lighting conduit diagram, see sheets E-135 thru E-140.

SHEET NOTES:

(1) 20 meter light poles, luminaires and lowering devices are state furnished and installed by contractor.

(2) Belvedere light poles and luminaires are state furnished and installed by contractor.

The following are review comments for this sheet

1. The removal of the light poles are not in this CCO.
   Remove all references to state furnished poles and detailing showing the poles are by others.
   The removal of the poles will take place in CCO #43.

REGISTERED PROFESSIONAL ENGINEER — MAXWELL FUMIO TAKATA No. E 8651 Exp. 9/30/2008 ELECTRICAL — STATE OF CALIFORNIA

FOR REVISION ONLY

REQUEST FOR INFORMATION NOT ADDRESSED IN THIS CCO REMAIN IN FORCE

MARK	DATE	REVISIONS: DESCRIPTIONS	BY	CH'D	CCO#
1	02/19/08	ELECTRICAL MODIFICATIONS	MP EL	RR	42

CONTRACT CHANGE ORDER NO._____
SHEET _____ OF _____

DETAILS
SAS SUPERSTRUCTURE ROADWAY EASTBOUND LIGHTING SCHEDULES

NO SCALE

E-168

DESIGN OVERSIGHT	CALCULATED/ DESIGNED BY	CHECKED BY	DATE REVISED	REVISED BY
BEHZAD GOLEMOHAMMADI	JP	BL	10/01	DATE 09/01

STATE OF CALIFORNIA - DEPARTMENT OF TRANSPORTATION — Caltrans

LAST REVISION 00-00-00 | DATE PLOTTED => 3/17/2008 | TIME PLOTTED => 5:00:45 PM

FOR REDUCED PLANS ORIGINAL SCALE IS IN MILLIMETERS 0 20 40 60 80

DGN FILE =>T:\13103\MS\pse\SAS Struc\CCO\SAS CC042\04-0120f1_021R01.dgn
USERNAME =>llorico

CU 04251 | EA 0120F1

DIST	COUNTY	ROUTE	KILOMETER POST TOTAL PROJECT	SHEET No	TOTAL SHEETS
04	SF	80	13.2/13.9	212R1	1204

Jens Erlingsson 12/19/02
REGISTERED ELECTRICAL ENGINEER DATE

12-6-04
PLANS APPROVAL DATE

REGISTERED PROFESSIONAL ENGINEER — JENS ERLINGSSON No. 8249 Exp. 9/30/06 ELECTRICAL — STATE OF CALIFORNIA

PB POWER, Inc.
A Parsons Brinckerhoff Company
303 Second St., Suite 700N
San Francisco, CA 94107-1317

The State of California or its officers or agents shall not be responsible for the accuracy or completeness of electronic copies of this plan sheet.

Caltrans now has a web site! To get to the web site, go to http://www.dot.ca.gov

PULL BOXES

Location	Type	Pull Box Size	Enclosure Type	Nameplate Pull Box Cover	Remarks
Roadway Barrier	PB-Com			Low Voltage - Call Box	Caltrans standard ES-9C (PB-9A)
Roadway Barrier	PB-Ltg			600 V - Electrical	Caltrans standard ES-9C (PB-9)
					1
Roadway and miscellaneous	PB-1B	304 L x 254 W x 127 D	NEMA 4X	600 V - Electrical	Located at main suspender cable
Roadway and miscellaneous	PB-1C	152 L x 152 W x 102 D	NEMA 4X	600 V - Electrical	Located at suspender brackets
Bike Path	PB-1D	152 L x 203 W x 102 D	NEMA 4X	600 V - Electrical	
Bike Path	PB-1E	305 L x 254 W x 152 D	NEMA 4X	600 V - Electrical	1
Inside Girder Box	PB-2A	406 L x 254 W x 152 D	NEMA 12	600 V - Electrical	
Service Platform	PB-2B	762 L x 610 W x 203 D	NEMA 4X	600 V - Electrical	
Inside Girder Box	PB-2C	915 L x 610 W x 610 D	NEMA 12	600 V - Electrical	Electrical vault-embedded in conc. deck
Inside Girder Box	PB-2K	1067 L x 915 W x 305 D	NEMA 12	600 V - Electrical	Electrical vault-surface/pendant mounted
Inside Girder Box	PB-2L	152 L x 152 W x 102 D	NEMA 12	600 V - Electrical	For future light pipe 1

SPLICE BOXES

Location	Type	Splice Box Size	Enclosure Type	Nameplate Splice Box Cover	Remarks
Inside Girder Box	PB-3A	1830 L x 915 W x 305 D	NEMA 12	Danger - High Voltage - Keep Out	
Inside Girder Box	PB-3B	813 L x 203 diameter	Cylindrical Housing	Fiber Optic	72 fibers to 12 fibers
Inside Girder Box	PB-3C	813 L x 203 diameter	Cylindrical Housing	Fiber Optic	72 fibers to 72 fibers

PANEL ENCLOSURES (1)

Location	Type	Cabinet/Terminal Box Size	Enclosure Type	Nameplate Cabinet/Terminal Cover	Remarks
Service Platform	PB-6C	See Panel Layout	NEMA 4X	See Panel Layout on E-305	For Navigation Relay Cabinet
Inside Girder Box	PB-7B	See Panel Layout	NEMA 12	See Panel Layout on E-321	For Scada Communication Terminal Box
Service Platform	PB-7C	508 H x 406 W x 203 D	NEMA 4X	Caltrans Telephone	Enclosure only - For Telephone Terminal Box
Inside Girder Box	PB-7D	508 H x 406 W x 203 D	NEMA 12	Caltrans Telephone	Enclosure only - For Telephone Terminal Box
Service Platform	PB-8A	Size by Contractor	NEMA 4X-Fiberglass	See Panel Schedules	Enclosure only - For Transformer/Panel

SAS SUPERSTRUCTURE EB

Location	Type	Pull Box Size	Enclosure Type	Nameplate Pull Box Cover	Remarks
Inside Light Pole	PB-2N	152 L x 152 W x 102 D	NEMA 12	TOS-MVDS	Cable Termination
Tower Platform	PB-2M	305 L x 305 W x 152 D	NEMA 12	TOS-MVDS	Cable Termination

SHEET NOTE:

(1) Panel enclosures shall be provided with padlock provisions.

REGISTERED PROFESSIONAL ENGINEER — MAXWELL FUMIO TAKATA No. E 8651 Exp. 9/30/2008 ELECTRICAL — STATE OF CALIFORNIA

FOR REVISION ONLY

REQUEST FOR INFORMATION NOT ADDRESSED IN THIS CCO REMAIN IN FORCE

MARK	DATE	DESCRIPTIONS	BY	CH'D	CCO#
		REVISIONS			
1	02/19/08	ELECTRICAL MODIFICATIONS	MP EL	RR	42

CONTRACT CHANGE ORDER NO._____
SHEET _____ OF _____

DETAILS
SAS SUPERSTRUCTURE ROADWAY EASTBOUND PULLBOX SCHEDULES
NO SCALE

E-169

STATE OF CALIFORNIA - DEPARTMENT OF TRANSPORTATION — Caltrans
DESIGN OVERSIGHT — BEHZAD GOLEMOHAMMADI
CALCULATED/DESIGNED BY — JP
CHECKED BY — BL
DATE 9/01 — 11/01
REVISED BY — DATE REVISED
LAST REVISION 00-00-00
DATE PLOTTED => 3/17/2008
TIME PLOTTED => 5:07:07 PM

FOR REDUCED PLANS ORIGINAL SCALE IS IN MILLIMETERS 0 20 40 60 80

DGN FILE =>T:\13103\MS\pse\SAS Struc\CCO\SAS CC042\04-0120f1_212R01.dgn
USERNAME =>llorico

CU 04251 | EA 0120F1

DIST	COUNTY	ROUTE	KILOMETER POST TOTAL PROJECT	SHEET No	TOTAL SHEETS
04	SF	80	13.2/13.9	215R1	1204

12/19/02
REGISTERED ELECTRICAL ENGINEER DATE

12-6-04
PLANS APPROVAL DATE

REGISTERED PROFESSIONAL ENGINEER — JENS ERLINGSSON No. 8249 Exp. 9/30/06 ELECTRICAL — STATE OF CALIFORNIA

PB POWER, Inc.
A Parsons Brinckerhoff Company
303 Second St., Suite 700N
San Francisco, CA 94107-1317

The State of California or its officers or agents shall not be responsible for the accuracy or completeness of electronic copies of this plan sheet.

Caltrans now has a web site! To get to the web site, go to http://www.dot.ca.gov

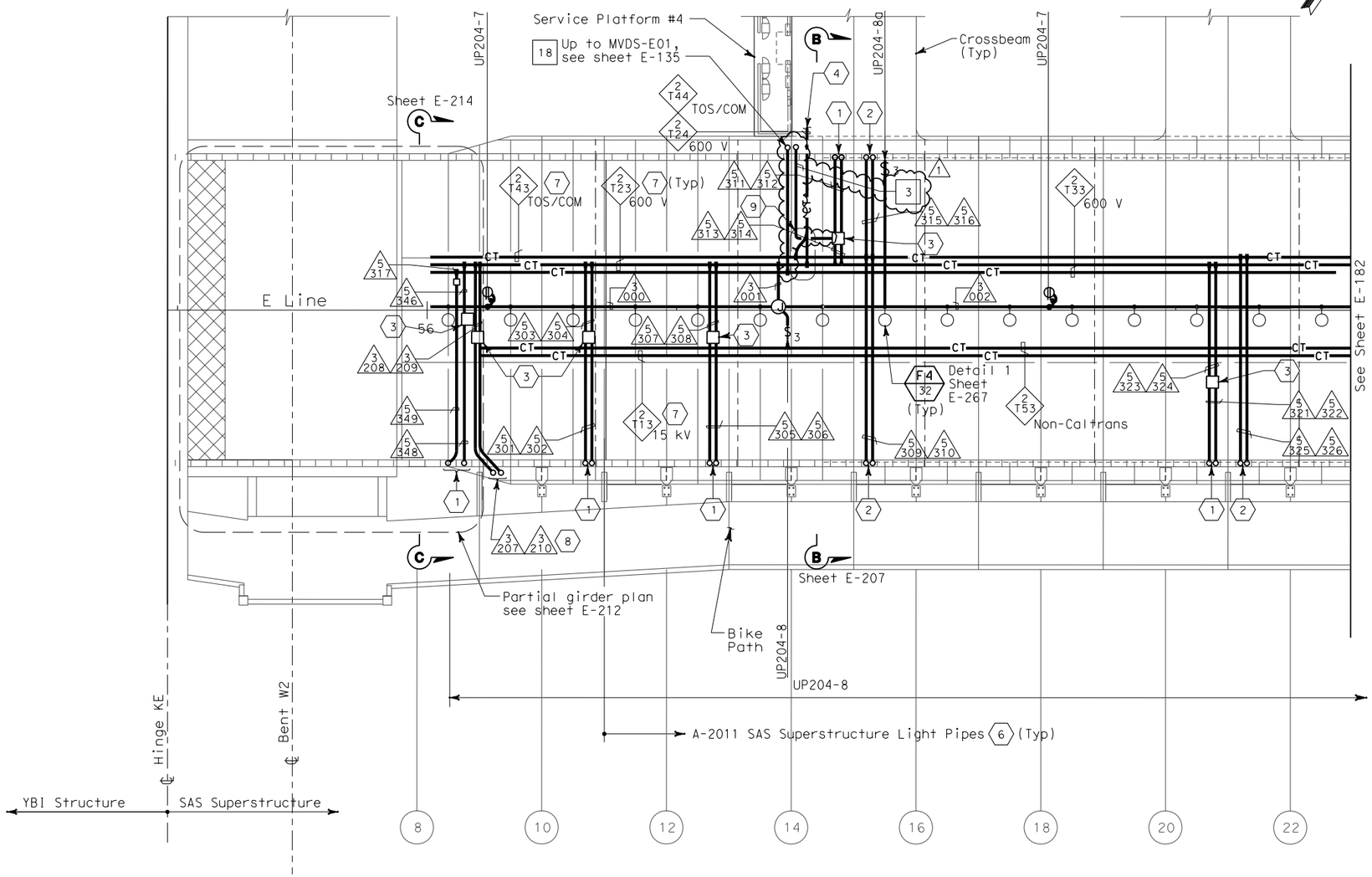

SHEET NOTES:

1. Conduit up to PB-LTG located in barrier, see sheet E-135.
2. Conduit up to PB-COM located in barrier, see sheet E-135.
3. PB-2A, locate on top of floor.
4. For cable tray run and lighting inside crossbeam, see sheet E-114.
5. For lighting inside crossbeam, see sheet E-119.
6. For future light pipes. see sheets E-202 thru E-205. For light pipe schedule, see sheet E-217.
7. For cable tray & ground bar support, refer to sheet E-208.
8. Up to suspension cable lighting, for continuation see sheet E-135.
9. For fiber splice tray detail. Refer to sheet E-211.

NOTES:

1. References:
   - TOS equipment is shown for conduit routing only. For typical details of TOS controller and devices, see sheets E-344 through E-346.
   - For types of pull boxes, splice boxes and enclosures, see sheet E-169.
   - For bridge grounding plan, see sheet E-196.
   - For circuit and conduit/cable tray schedules, see sheets starting at E-401.
2. For other work related to Hinge KE and items not shown on this sheet, see Electrical Special Provisions.
3. The girder lighting fixtures are shown diagrammatically.Contractor shall install fixtures at railing posts with a maximum of 8000 mm between fixtures. For types and typical lighting fixture installation details, see sheet E-206.
4. The cable trays are shown diagrammatically. For typical girder cable tray plans and sections, see sheets E-207 and E-208.

SAS SUPERSTRUCTURE - CONDUIT AND CABLE TRAY PLAN

REGISTERED PROFESSIONAL ENGINEER — MAXWELL FUMIO TAKATA No. E 8651 Exp. 9/30/2008 ELECTRICAL — STATE OF CALIFORNIA

FOR REVISION ONLY

REQUEST FOR INFORMATION NOT ADDRESSED IN THIS CCO REMAIN IN FORCE

MARK	DATE	DESCRIPTIONS	MP EL BY	RR CH'D	42 CCO#
		REVISIONS			
1	02/19/08	ELECTRICAL MODIFICATIONS			

CONTRACT CHANGE ORDER NO._____
SHEET _____ OF _____

SAS SUPERSTRUCTURE GIRDER EASTBOUND
LIGHTING AND ELECTRICAL SYSTEMS

SCALE 1:200

E-181

THIS PLAN IS ACCURATE FOR ELECTRICAL WORK ONLY.

ALL DIMENSIONS ARE IN METERS UNLESS OTHERWISE SHOWN

FOR REDUCED PLANS ORIGINAL SCALE IS IN MILLIMETERS 0 20 40 60 80

DGN FILE =>T:\13103\MS\pse\SAS Struc\CCO\SAS CC042\04-0120f1_0215R01.dgn
USERNAME =>llorico

CU 04251

EA 0120F1

LAST REVISION 00-00-00
DATE PLOTTED => 3/17/2008
TIME PLOTTED => 5:07:49 PM

STATE OF CALIFORNIA - DEPARTMENT OF TRANSPORTATION
Caltrans

DESIGN OVERSIGHT
BEHZAD GOLEMOHAMMADI

CALCULATED/ DESIGNED BY
CHECKED BY

DATE	REVISED BY
08/02	DATE REVISED
EDC	
CYF	

DIST	COUNTY	ROUTE	KILOMETER POST TOTAL PROJECT	SHEET No	TOTAL SHEETS
04	SF	80	13.2/13.9	218R1	1204

REGISTERED ELECTRICAL ENGINEER — 12/19/02 DATE

12-6-04
PLANS APPROVAL DATE

REGISTERED PROFESSIONAL ENGINEER — JENS ERLINGSSON No. 8249 Exp. 9/30/06 ELECTRICAL — STATE OF CALIFORNIA

PB POWER, Inc.
A Parsons Brinckerhoff Company
303 Second St., Suite 700N
San Francisco, CA 94107-1317

The State of California or its officers or agents shall not be responsible for the accuracy or completeness of electronic copies of this plan sheet.

Caltrans now has a web site! To get to the web site, go to http://www.dot.ca.gov

Caltrans Metric

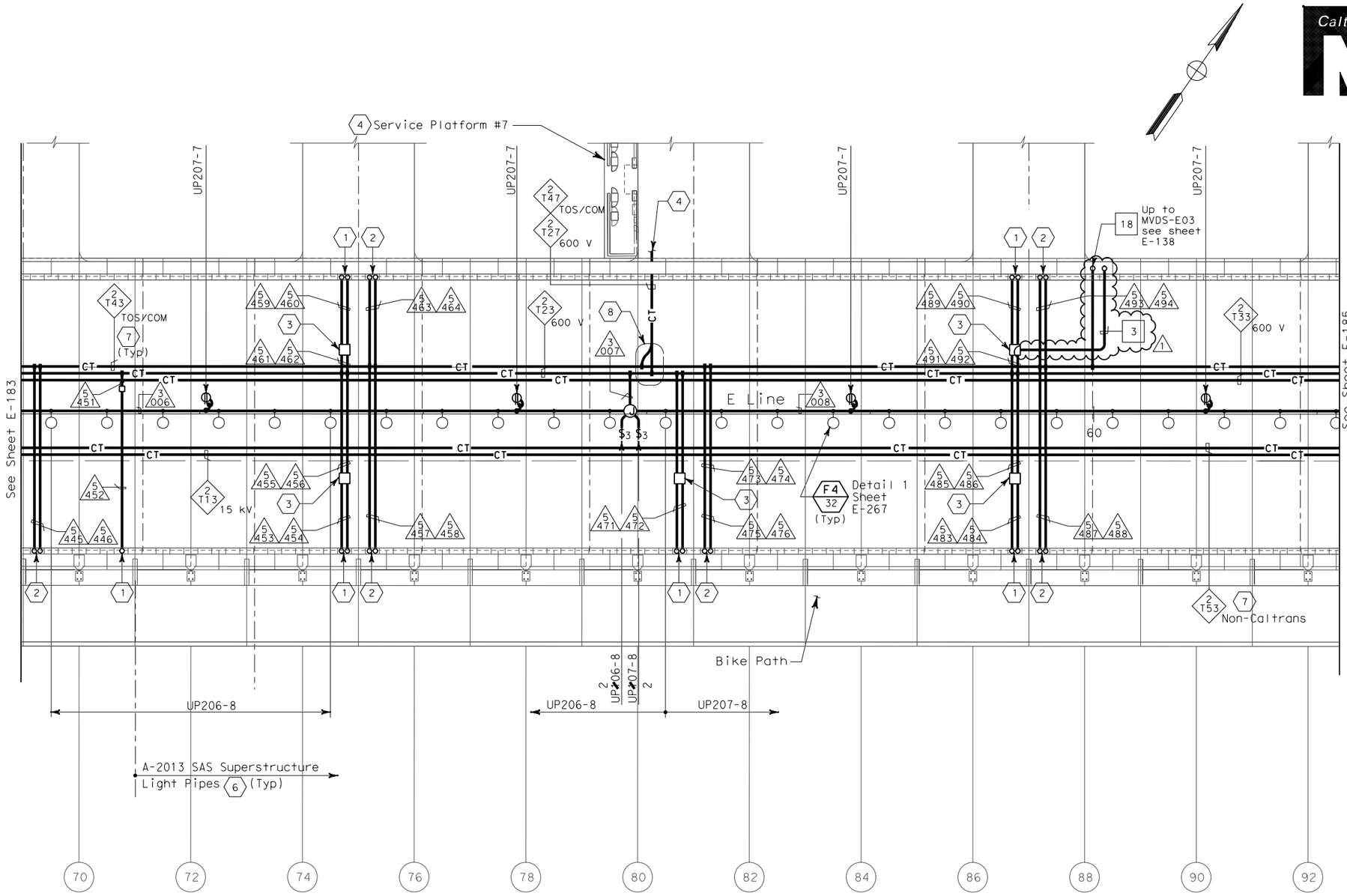

SHEET NOTES:

1. Conduit up to PB-LTG located in barrier, see sheet E-138.
2. Conduit up to PB-COM located in barrier, see sheet E-138
3. PB-2A, locate on top of floor.
4. For cable tray run and lighting inside crossbeam, see sheet E-117.
5. For lighting inside crossbeam, see sheet E-119.
6. For future light pipes, see sheets E-202 thru E-204. For light pipe schedule, see sheet E-217.
7. For cable tray & ground bar support, refer to sheet E-208.
8. For fiber splice tray detail. Refer to sheet E-355.

NOTES:

1. References:
   - TOS equipment is shown for conduit routing only. For typical details of TOS controller and devices, see sheets E-344 through E-357.
   - For types of pull boxes, splice boxes and enclosures, see sheet E-169.
   - For bridge grounding plan, see sheet E-196.
   - For circuit and conduit/cable tray schedules, see sheets starting at E-401.
2. For other work related to items not shown on this sheet, see Electrical Special Provisions.
3. The girder lighting fixtures are shown diagrammatically.Contractor shall install fixtures at railing posts with a maximum of 8000 mm between fixtures. For types and typical lighting fixture installation details, see sheet E-206.
4. The cable trays are shown diagrammatically. For typical girder cable tray plans and sections, see sheets E-207 and E-208.

SAS SUPERSTRUCTURE - CONDUIT AND CABLE TRAY PLAN

REGISTERED PROFESSIONAL ENGINEER — MAXWELL FUMIO TAKATA No. E 8651 Exp. 9/30/2008 ELECTRICAL — STATE OF CALIFORNIA

FOR REVISION ONLY

REQUEST FOR INFORMATION NOT ADDRESSED IN THIS CCO REMAIN IN FORCE

MARK	DATE	DESCRIPTIONS	BY	CH'D	CCO#
		REVISIONS			
1	02/19/08	ELECTRICAL MODIFICATIONS	MP EL	RR	42

CONTRACT CHANGE ORDER NO._____
SHEET _____ OF _____

SAS SUPERSTRUCTURE GIRDER EASTBOUND LIGHTING AND ELECTRICAL SYSTEMS

SCALE 1:200

E-184

STATE OF CALIFORNIA - DEPARTMENT OF TRANSPORTATION — Caltrans
DESIGN OVERSIGHT — BEHZAD GOLEMOHAMMADI
CALCULATED/DESIGNED BY — CHECKED BY
DATE 08/02 EDC — 08/02 CYF
REVISED BY — DATE REVISED

LAST REVISION 00-00-00
DATE PLOTTED => 3/17/2008
TIME PLOTTED => 5:10:33 PM

THIS PLAN IS ACCURATE FOR ELECTRICAL WORK ONLY.

ALL DIMENSIONS ARE IN METERS UNLESS OTHERWISE SHOWN.

FOR REDUCED PLANS ORIGINAL SCALE IS IN MILLIMETERS 0 20 40 60 80

DGN FILE =>T:\13103\MS\pse\SAS Struc\CCO\SAS CC042\04-0120f1_028R01.dgn
USERNAME =>llorico

CU 04251 EA 0120F1

DIST	COUNTY	ROUTE	KILOMETER POST TOTAL PROJECT	SHEET No	TOTAL SHEETS
04	SF	80	13.2/13.9	219R1	1204

12/19/02
REGISTERED ELECTRICAL ENGINEER DATE

12-6-04
PLANS APPROVAL DATE

REGISTERED PROFESSIONAL ENGINEER — JENS ERLINGSSON No. 8249 Exp. 9/30/06 ELECTRICAL — STATE OF CALIFORNIA

PB POWER, Inc.
A Parsons Brinckerhoff Company
303 Second St., Suite 700N
San Francisco, CA 94107-1317

The State of California or its officers or agents shall not be responsible for the accuracy or completeness of electronic copies of this plan sheet.

Caltrans now has a web site! To get to the web site, go to http://www.dot.ca.gov

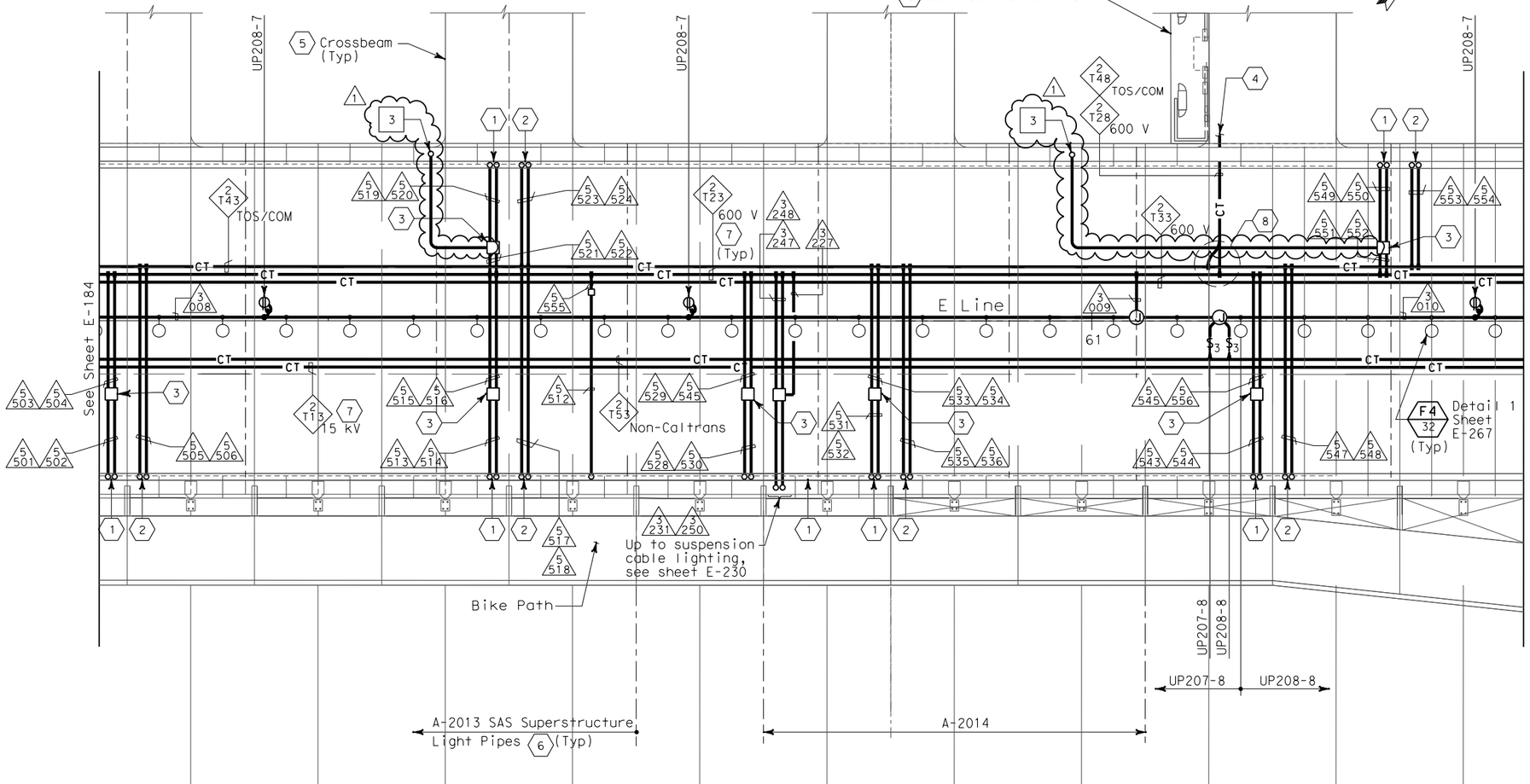

SHEET NOTES:

1. Conduit up to PB-LTG located in barrier, see sheet E-139.
2. Conduit up to PB-COM located in barrier, see sheet E-139.
3. PB-2A, locate on top of floor.
4. For cable tray run and lighting inside crossbeam, see sheet E-118.
5. For lighting inside crossbeam, see sheet E-119.
6. For future light pipes, see sheets E-202 thru E-204. For light pipe schedule, see sheet E-217.
7. For cable tray & ground bar support, refer to sheet E-208.
8. For fiber splice tray detail, refer to sheet E-355.

NOTES:

1. References:
   - TOS equipment is shown for conduit routing only. For typical details of TOS controller and devices, see sheets E-344 through E-357.
   - For types of pull boxes, splice boxes and enclosures, see sheet E-169.
   - For bridge grounding plan, see sheet E-196.
   - For circuit and conduit/cable tray schedules, see sheets starting at E-401.
2. For other work related to items not shown on this sheet, see Electrical Special Provisions.
3. The girder lighting fixtures are shown diagrammatically. Contractor shall install fixtures at railing posts with a maximum of 8000 mm between fixtures. For types and typical lighting fixture installation details, see sheet E-206.
4. The cable trays are shown diagrammatically. For typical girder cable tray plans and sections, see sheets E-207 and E-208.

SAS SUPERSTRUCTURE - CONDUIT AND CABLE TRAY PLAN

REGISTERED PROFESSIONAL ENGINEER — MAXWELL FUMIO TAKATA No. E 8651 Exp. 9/30/2008 ELECTRICAL — STATE OF CALIFORNIA

FOR REVISION ONLY

REQUEST FOR INFORMATION NOT ADDRESSED IN THIS CCO REMAIN IN FORCE

MARK	DATE	DESCRIPTIONS	BY	CH'D	CCO#
		REVISIONS			
1	02/19/08	ELECTRICAL MODIFICATIONS	MP EL	RR	42

CONTRACT CHANGE ORDER NO._____
SHEET _____ OF _____

SAS SUPERSTRUCTURE GIRDER EASTBOUND
LIGHTING AND ELECTRICAL SYSTEMS

SCALE 1:200

E-185

STATE OF CALIFORNIA - DEPARTMENT OF TRANSPORTATION
Caltrans
DESIGN OVERSIGHT
BEHZAD GOLEMOHAMMADI
CALCULATED/DESIGNED BY
CHECKED BY
EDC
CYF
DATE 08/02
DATE 08/02
REVISED BY
DATE REVISED

THIS PLAN IS ACCURATE FOR ELECTRICAL WORK ONLY.

ALL DIMENSIONS ARE IN METERS UNLESS OTHERWISE SHOWN.

FOR REDUCED PLANS ORIGINAL SCALE IS IN MILLIMETERS 0 20 40 60 80

DGN FILE =>T:\13103\MS\pse\SAS Struc\CCO\SAS CC042\04-0120f1_029R01.dgn
USERNAME =>llorico

CU 04251

EA 0120F1

LAST REVISION 00-00-00
DATE PLOTTED => 3/17/2008
TIME PLOTTED => 5:10:53 PM

Caltrans Metric

DIST	COUNTY	ROUTE	KILOMETER POST TOTAL PROJECT	SHEET No	TOTAL SHEETS
04	SF	80	13.2/13.9	222R1	1204

James Erlingsson 12/19/02
REGISTERED ELECTRICAL ENGINEER DATE

12-6-04
PLANS APPROVAL DATE

REGISTERED PROFESSIONAL ENGINEER — JENS ERLINGSSON No. 8249 Exp. 9/30/06 ELECTRICAL — STATE OF CALIFORNIA

PB POWER, Inc.
A Parsons Brinckerhoff Company
303 Second St., Suite 700N
San Francisco, CA 94107-1317

The State of California or its officers or agents shall not be responsible for the accuracy or completeness of electronic copies of this plan sheet.

Caltrans now has a web site! To get to the web site, go to http://www.dot.ca.gov

SHEET NOTES:

1. 2#10 + #10 G single conductors.
2. Conductors spliced in pull box PB-2A (1) located inside the girder.
3. Future light pipe connections. Coil and tape end of conductors ~~in the first~~ pull box ~~PB-2A~~ located ~~inside girder~~. PB-1B (1) inside barrier
4. Future light pipe not included in this contract.
5. The Contractor shall extend and coil 5.0 meters of cable in manhole #25. All cables shall be tagged with circuit numbers as shown.

3

NOTES:

1. References:
   - For LVCC-B single line diagrams, see sheets E-32 to E-34.
   - For light pipe schedules, see sheet E-217.
   - For circuit and conduit/cable tray schedules, see sheets starting at E-401.
   - For typical pull box schedules, see sheet E-169.

REGISTERED PROFESSIONAL ENGINEER — MAXWELL FUMIO TAKATA No. E 8651 Exp. 9/30/2008 ELECTRICAL — STATE OF CALIFORNIA

FOR REVISION ONLY

REQUEST FOR INFORMATION NOT ADDRESSED IN THIS CCO REMAIN IN FORCE

MARK	DATE	DESCRIPTIONS	BY	CH'D	CCO#
		REVISIONS			
1	02/19/08	ELECTRICAL MODIFICATIONS	MP EL	RR	42

CONTRACT CHANGE ORDER NO._____
SHEET _____ OF _____

DETAILS
SAS SUPERSTRUCTURE GIRDER EASTBOUND
480 V LIGHT PIPE WIRING DIAGRAM

NO SCALE

3 **REVISED PER ADDENDUM NO. 3 DATED NOVEMBER 7, 2005**

E-189

REVISED BY	DATE REVISED
EDC	08/02
CYF	08/02

CALCULATED/DESIGNED BY
CHECKED BY

DESIGN OVERSIGHT
BEHZAD GOLEMOHAMMADI

STATE OF CALIFORNIA - DEPARTMENT OF TRANSPORTATION
Caltrans

LAST REVISION 00-00-00
DATE PLOTTED => 3/17/2008
TIME PLOTTED => 5:11:17 PM

FOR REDUCED PLANS ORIGINAL SCALE IS IN MILLIMETERS 0 20 40 60 80

DGN FILE =>T:\13103\MS\pse\SAS Struc\CCO\SAS CC042\04-0120f1_0222R01.dgn
USERNAME =>llorico

CU 04251

EA 0120F1

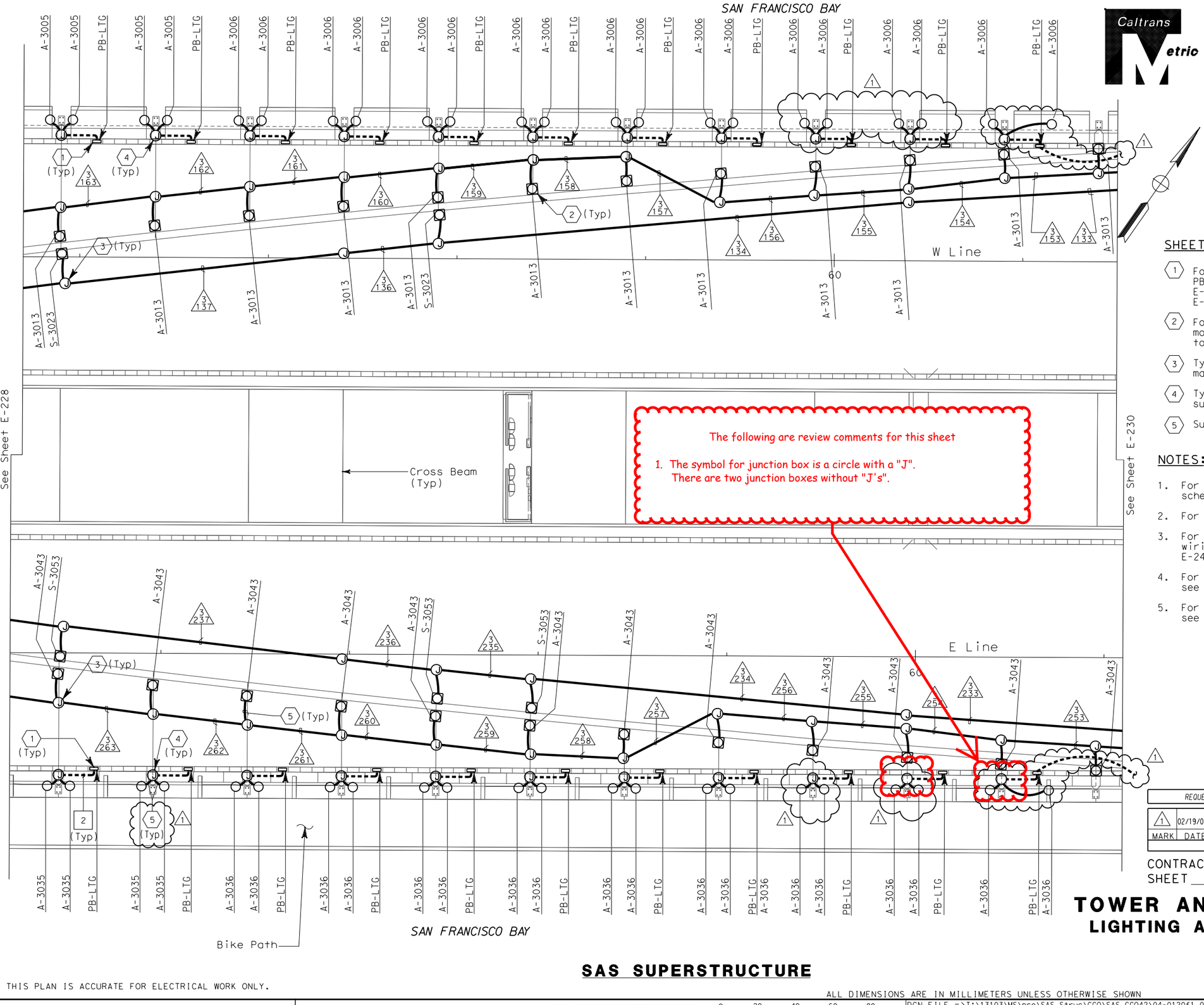

DIST	COUNTY	ROUTE	KILOMETER POST TOTAL PROJECT	SHEET No	TOTAL SHEETS
04	SF	80	13.2/13.9	247R1	1204

12/19/02
REGISTERED ELECTRICAL ENGINEER DATE

REGISTERED PROFESSIONAL ENGINEER
JENS ERLINGSSON
No. 8249
Exp. 9/30/06
ELECTRICAL
STATE OF CALIFORNIA

12-6-04
PLANS APPROVAL DATE

PB POWER, Inc.
A Parsons Brinckerhoff Company
303 Second St., Suite 700N
San Francisco, CA 94107-1317

The State of California or its officers or agents shall not be responsible for the accuracy or completeness of electronic copies of this plan sheet.

Caltrans now has a web site! To get to the web site, go to http://www.dot.ca.gov

SHEET NOTES:

1. For additional conduits and actual location from PB-LTG, see SAS Superstructure Roadway Plans: E-49 (Westbound) E-138 (Eastbound)
2. For tower and suspension cable lighting mounting details, see sheets E-251 and E-257 to E-261.
3. Type PB-1B junction box is mounted on main suspension cable.
4. Type PB-1C junction box is mounted on suspender brackets.
5. Supplied with lighting fixture assembly.

NOTES:

1. For tower and suspension cable lighting schedule see sheets E-271 to E-272.
2. For pull box schedule see sheets E-83 & E-169.
3. For 480 V main suspension cable lighting wiring diagrams, see sheets E-236 through E-240 and E-243 through E-247.
4. For circuit and conduit/cable tray schedules, see sheets starting at E-401.
5. For other related work not shown on this sheet, see Electrical Special Provisions.

REGISTERED PROFESSIONAL ENGINEER
MARRELL FUMIO TAKATA
No. E 8651
Exp. 9/30/2008
ELECTRICAL
STATE OF CALIFORNIA

FOR REVISION ONLY

REQUEST FOR INFORMATION NOT ADDRESSED IN THIS CCO REMAIN IN FORCE

MARK	DATE	DESCRIPTIONS	BY	CH'D	CCO#
		REVISIONS			
1	02/19/08	ELECTRICAL MODIFICATIONS	MP EL	RR	42

CONTRACT CHANGE ORDER NO._____
SHEET _____ OF _____

TOWER AND SUSPENSION CABLE LIGHTING AND ELECTRICAL SYSTEMS

SCALE 1:200

SAS SUPERSTRUCTURE

E-229

CALCULATED/ DESIGNED BY	DATE	REVISED BY
CHECKED BY	EDC	09/01
	JP	08/01

DESIGN OVERSIGHT - BEHZAD GOLEMOHAMMADI

STATE OF CALIFORNIA - DEPARTMENT OF TRANSPORTATION

Caltrans

THIS PLAN IS ACCURATE FOR ELECTRICAL WORK ONLY.

ALL DIMENSIONS ARE IN MILLIMETERS UNLESS OTHERWISE SHOWN

FOR REDUCED PLANS ORIGINAL SCALE IS IN MILLIMETERS 0 20 40 60 80

DGN FILE =>T:\13103\MS\pse\SAS Struc\CCO\SAS CC042\04-0120f1_0247R01.dgn
USERNAME =>llorico

CU 04251

EA 0120F1

LAST REVISION 00-00-00

DATE PLOTTED => 3/17/2008
TIME PLOTTED => 5:11:41 PM

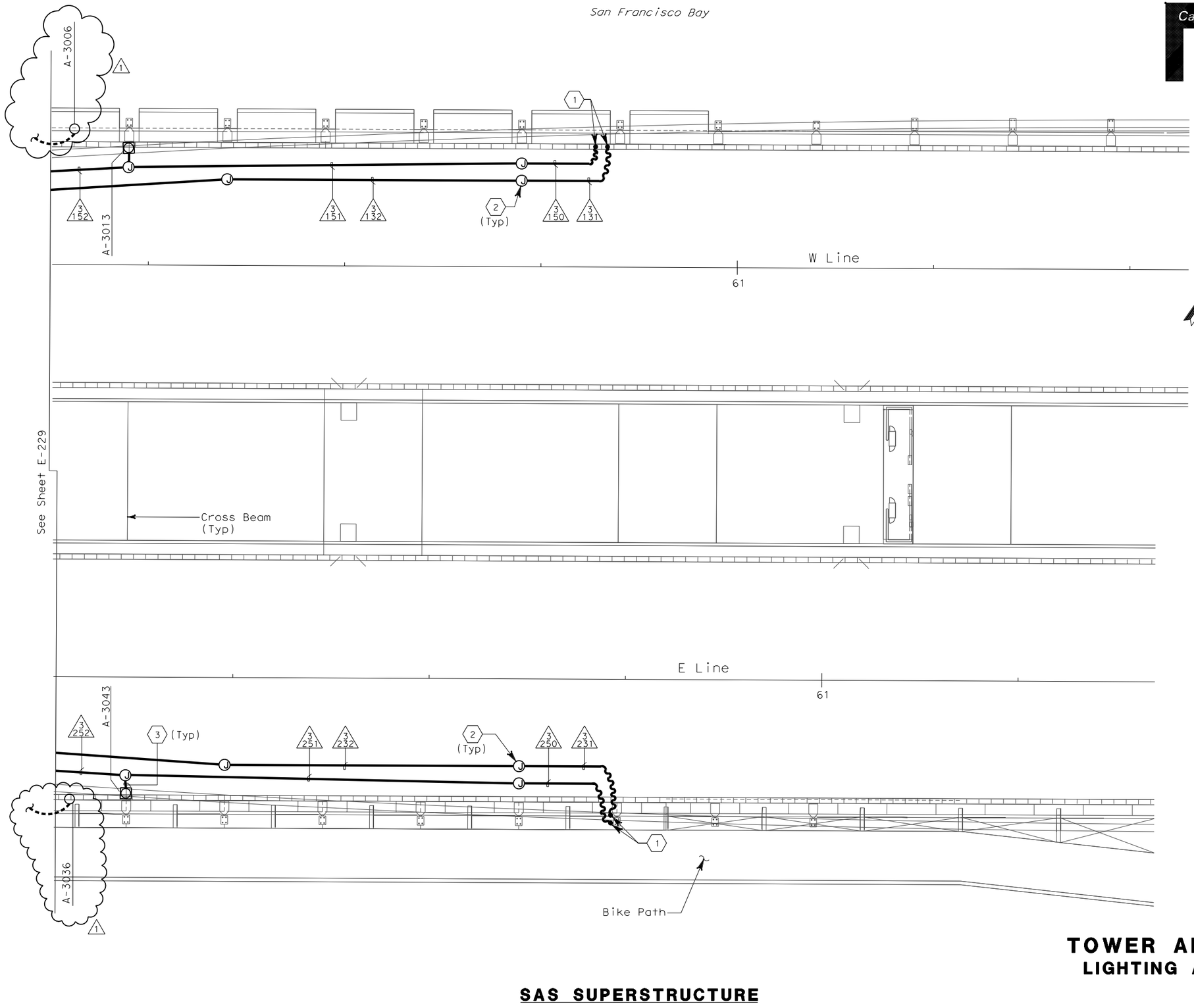

SHEET NOTES:

1. Flexible conduits attached to suspender cables. See SAS Superstructure Roadway Plans: E-50 (Westbound) E-139 (Eastbound)
2. Type PB-1B junction box is mounted on main suspension cable.
3. Supplied with lighting fixture assembly.

NOTES:

1. For tower and suspension cable lighting schedule see sheets E-271 to E-272.
2. For pull box schedule see sheets E-83 & E-169.
3. For 480 V main suspension cable lighting wiring diagrams, see sheets E-236 through E-240 and E-243 through E-247.
4. For circuit and conduit/cable tray schedules, see sheets starting at E-401.
5. For other related work not shown on this sheet, see Electrical Special Provisions.

SAS SUPERSTRUCTURE

TOWER AND SUSPENSION CABLE LIGHTING AND ELECTRICAL SYSTEMS

SCALE 1:200

E-230

DIST	COUNTY	ROUTE	KILOMETER POST TOTAL PROJECT	SHEET No	TOTAL SHEETS
04	SF	80	13.2/13.9	248R1	1204

Jens Erlingsson 12/19/02
REGISTERED ELECTRICAL ENGINEER DATE

12-6-04
PLANS APPROVAL DATE

REGISTERED PROFESSIONAL ENGINEER — JENS ERLINGSSON No. 8249 Exp. 9/30/06 ELECTRICAL — STATE OF CALIFORNIA

PB POWER, Inc.
A Parsons Brinckerhoff Company
303 Second St., Suite 700N
San Francisco, CA 94107-1317

The State of California or its officers or agents shall not be responsible for the accuracy or completeness of electronic copies of this plan sheet.

Caltrans now has a web site! To get to the web site, go to http://www.dot.ca.gov

REGISTERED PROFESSIONAL ENGINEER — MAXWELL FUMIO TAKATA No. E 8651 Exp. 9/30/2008 ELECTRICAL — STATE OF CALIFORNIA

FOR REVISION ONLY

REQUEST FOR INFORMATION NOT ADDRESSED IN THIS CCO REMAIN IN FORCE

MARK	DATE	DESCRIPTIONS	BY	CH'D	CCO#
		REVISIONS			
1	02/19/08	ELECTRICAL MODIFICATIONS	MP EL	RR	42

CONTRACT CHANGE ORDER NO._____
SHEET _____ OF _____

CALCULATED/ DESIGNED BY	CHECKED BY
JP	EDC

DATE	REVISED BY
08/01	09/01

DATE REVISED

DESIGN OVERSIGHT
BEHZAD GOLEMOHAMMADI

STATE OF CALIFORNIA - DEPARTMENT OF TRANSPORTATION
Caltrans

THIS PLAN IS ACCURATE FOR ELECTRICAL WORK ONLY.

ALL DIMENSIONS ARE IN MILLIMETERS UNLESS OTHERWISE SHOWN

FOR REDUCED PLANS ORIGINAL SCALE IS IN MILLIMETERS 0 20 40 60 80

DGN FILE =>T:\13103\MS\pse\SAS Struc\CCO\SAS CCO42\04-0120f1_0248R01.dgn
USERNAME =>llorico

CU 04251 EA 0120F1

LAST REVISION 00-00-00
DATE PLOTTED => 3/17/2008
TIME PLOTTED => 5:12:02 PM

DIST	COUNTY	ROUTE	KILOMETER POST TOTAL PROJECT	SHEET No	TOTAL SHEETS
04	SF	80	13.2/13.9	249R1	1204

12/19/02
REGISTERED ELECTRICAL ENGINEER DATE

12-6-04
PLANS APPROVAL DATE

REGISTERED PROFESSIONAL ENGINEER — JENS ERLINGSSON — No. 8249 — Exp. 9/30/06 ELECTRICAL — STATE OF CALIFORNIA

PB POWER, Inc.
A Parsons Brinckerhoff Company
303 Second St., Suite 700N
San Francisco, CA 94107-1317

The State of California or its officers or agents shall not be responsible for the accuracy or completeness of electronic copies of this plan sheet.

Caltrans now has a web site! To get to the web site, go to http://www.dot.ca.gov

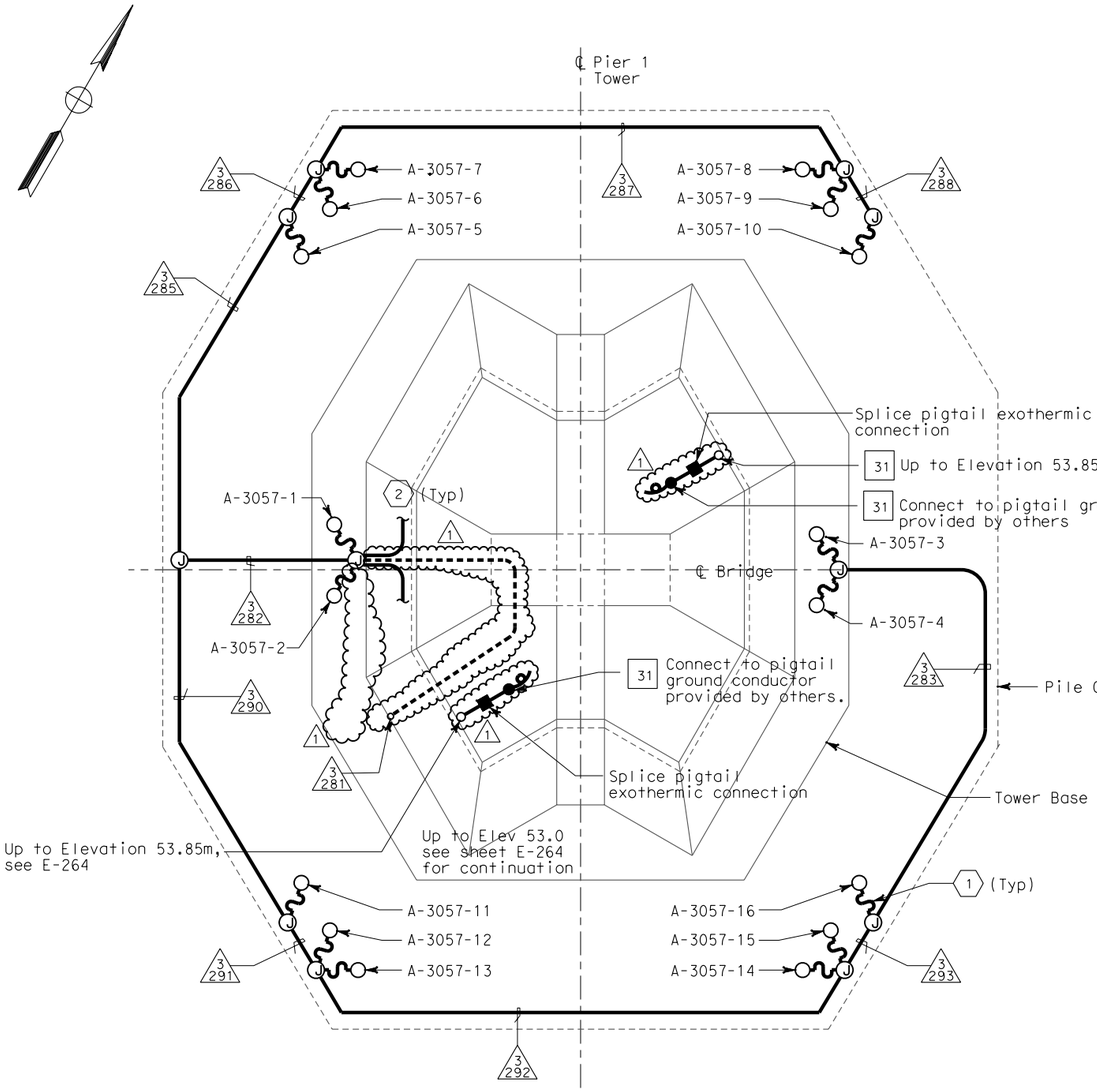

PLAN AT ELEV. 3.0

SCALE 1:125

NOTES:

1. References:
   - For 480 V Pier 1 tower lighting wiring diagram, see sheet E-250.
2. For circuit and conduit/cable tray schedules, see sheets starting at E-401.
3. For location plan of marker lights type MAP, see sheet E-227.
4. For other related work not shown on this sheet, see Electrical Special Provisions.

SHEET NOTES:

(1) Supplied with lighting fixture assembly.
(2) Continue to sump pump shown on E-266.

PIER 1 TOWER - LIGHTING SCHEDULE

Fixture Number	Location	Light Fixture Type	Number/ Wattage	Remarks
A-3057-1	Inside Pylon	MAU-2A	1-400 W	With Remote Ballast
A-3057-2	Inside Pylon	MAU-2A	1-400 W	With Remote Ballast
A-3057-3	Inside Pylon	MAU-2A	1-400 W	With Remote Ballast
A-3057-4	Inside Pylon	MAU-2A	1-400 W	With Remote Ballast
A-3057-5	Base (North)	MAR-2A-PB	1-400 W	
A-3057-6	Base (North)	MAR-2-PB	1-400 W	
A-3057-7	Base (North)	MAR-2A-PB	1-400 W	
A-3057-8	Base (North)	MAR-2A-PB	1-400 W	
A-3057-9	Base (North)	MAR-2-PB	1-400 W	
A-3057-10	Base (North)	MAR-2A-PB	1-400 W	
A-3057-11	Base (South)	MAR-2A-PB	1-400 W	
A-3057-12	Base (South)	MAR-2-PB	1-400 W	
A-3057-13	Base (South)	MAR-2A-PB	1-400 W	
A-3057-14	Base (South)	MAR-2A-PB	1-400 W	
A-3057-15	Base (South)	MAR-2-PB	1-400 W	
A-3057-16	Base (South)	MAR-2A-PB	1-400 W	
A-3008	Top of Pylon	MAP	2-250 W max. at 120 V, w/ lamp changer	

REGISTERED PROFESSIONAL ENGINEER — MARRELL FUMIO TAKAKI — No. E 8651 — Exp. 9/30/2008 ELECTRICAL — STATE OF CALIFORNIA

FOR REVISION ONLY

REQUEST FOR INFORMATION NOT ADDRESSED IN THIS CCO REMAIN IN FORCE

MARK	DATE	DESCRIPTIONS	BY	CH'D	CCO#
		REVISIONS			
1	02/19/08	ELECTRICAL MODIFICATIONS	MP EL	RR	42

CONTRACT CHANGE ORDER NO._____
SHEET _____ OF _____

TOWER AND SUSPENSION CABLE LIGHTING AND ELECTRICAL SYSTEMS

SCALE AS NOTED

E-231

THIS PLAN IS ACCURATE FOR ELECTRICAL WORK ONLY.

ALL DIMENSIONS ARE IN MILLIMETERS UNLESS OTHERWISE SHOWN.

STATE OF CALIFORNIA - DEPARTMENT OF TRANSPORTATION
Caltrans
DESIGN OVERSIGHT
BEHZAD GOLEMOHAMMADI

CALCULATED/ DESIGNED BY		REVISED BY	AB
CHECKED BY	EDC	DATE REVISED	2/04
	FK	DATE 10/01	
			11/01

LAST REVISION 00-00-00
DATE PLOTTED => 3/17/2008
TIME PLOTTED => 5:12:23 PM

FOR REDUCED PLANS ORIGINAL SCALE IS IN MILLIMETERS 0 20 40 60 80

DGN FILE =>T:\13103\MS\pse\SAS Struc\CCO\SAS CCO42\04-0120f1_0249R01.dgn
USERNAME =>llorico

CU 04251

EA 0120F1

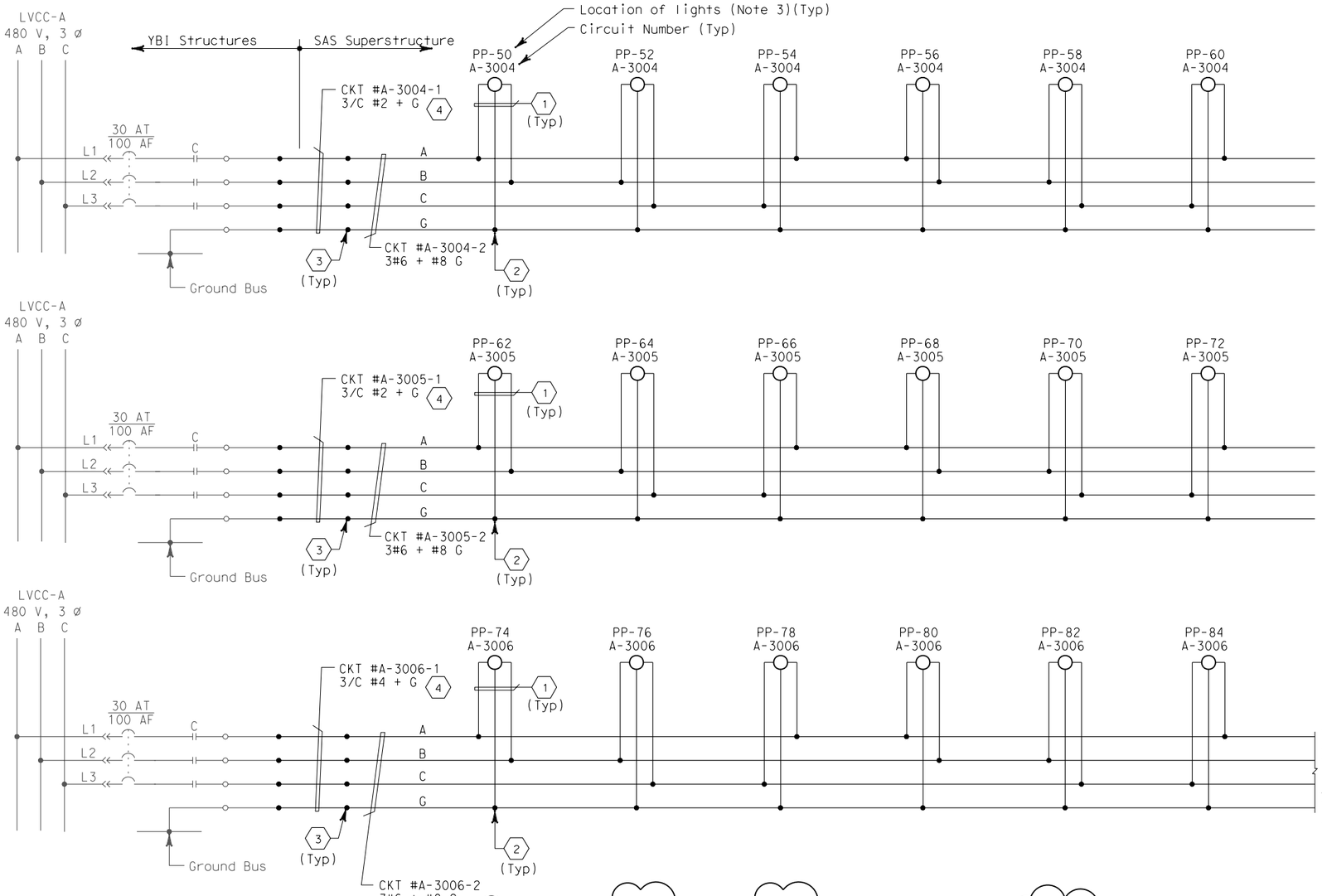

480 V SUSPENDER UPLIGHT LIGHTING

Caltrans Metric

DIST	COUNTY	ROUTE	KILOMETER POST TOTAL PROJECT	SHEET No	TOTAL SHEETS
04	SF	80	13.2/13.9	252R1	1204

Jens Erlingsson 12/19/02
REGISTERED ELECTRICAL ENGINEER DATE

12-6-04
PLANS APPROVAL DATE

REGISTERED PROFESSIONAL ENGINEER — JENS ERLINGSSON No. 8249 Exp. 9/30/06 ELECTRICAL — STATE OF CALIFORNIA

PB POWER, Inc.
A Parsons Brinckerhoff Company
303 Second St., Suite 700N
San Francisco, CA 94107-1317

The State of California or its officers or agents shall not be responsible for the accuracy or completeness of electronic copies of this plan sheet.

Caltrans now has a web site! To get to the web site, go to http://www.dot.ca.gov

SHEET NOTES:

1. 2/C #10 + G, type SO cord.
2. Conductors spliced inside pull box PB-LTG.
3. Conductors spliced inside junction box PB-2A located inside girder.
4. The Contractor shall extend and coil 5 meters of cable in manhole 25. All cables shall be tagged with circuits numbers as shown.

NOTES:

1. Use multi-conductor cable if circuit is routed via trays.
2. References:
   - For typical pull box schedule, see sheets E-83 and E-169.
   - For circuit and conduit/cable tray schedules, see sheets starting at E-401.
3. For number of lighting fixtures see Lighting Fixture Schedule sheets E-271 and E-272.

REGISTERED PROFESSIONAL ENGINEER — MANNELL FUMIO TAKAKI No. E 8651 Exp. 9/30/2008 ELECTRICAL — STATE OF CALIFORNIA

FOR REVISION ONLY

REQUEST FOR INFORMATION NOT ADDRESSED IN THIS CCO REMAIN IN FORCE

MARK	DATE	DESCRIPTIONS	BY	CH'D	CCO#
		REVISIONS			
1	02/19/08	ELECTRICAL MODIFICATIONS	MP EL	RR	42

CONTRACT CHANGE ORDER NO._____
SHEET _____ OF _____

DETAILS
TOWER AND SUSPENSION CABLE
480 V MAIN SUSPENSION CABLE LIGHTING WIRING DIAGRAM

NO SCALE

E-238

CALCULATED/ DESIGNED BY	DATE 8/01	REVISED BY
CHECKED BY	EDC 11/01	DATE REVISED

DESIGN OVERSIGHT — BEHZAD GOLEMOHAMMADI

STATE OF CALIFORNIA - DEPARTMENT OF TRANSPORTATION — Caltrans

LAST REVISION 00-00-00 — DATE PLOTTED => 3/17/2008 — TIME PLOTTED => 5:12:50 PM

FOR REDUCED PLANS ORIGINAL SCALE IS IN MILLIMETERS 0 20 40 60 80

DGN FILE =>T:\13103\MS\pse\SAS Struc\CCO\SAS CC042\04-0120f1_0252R01.dgn
USERNAME =>llorico

CU 04251 — EA 0120F1

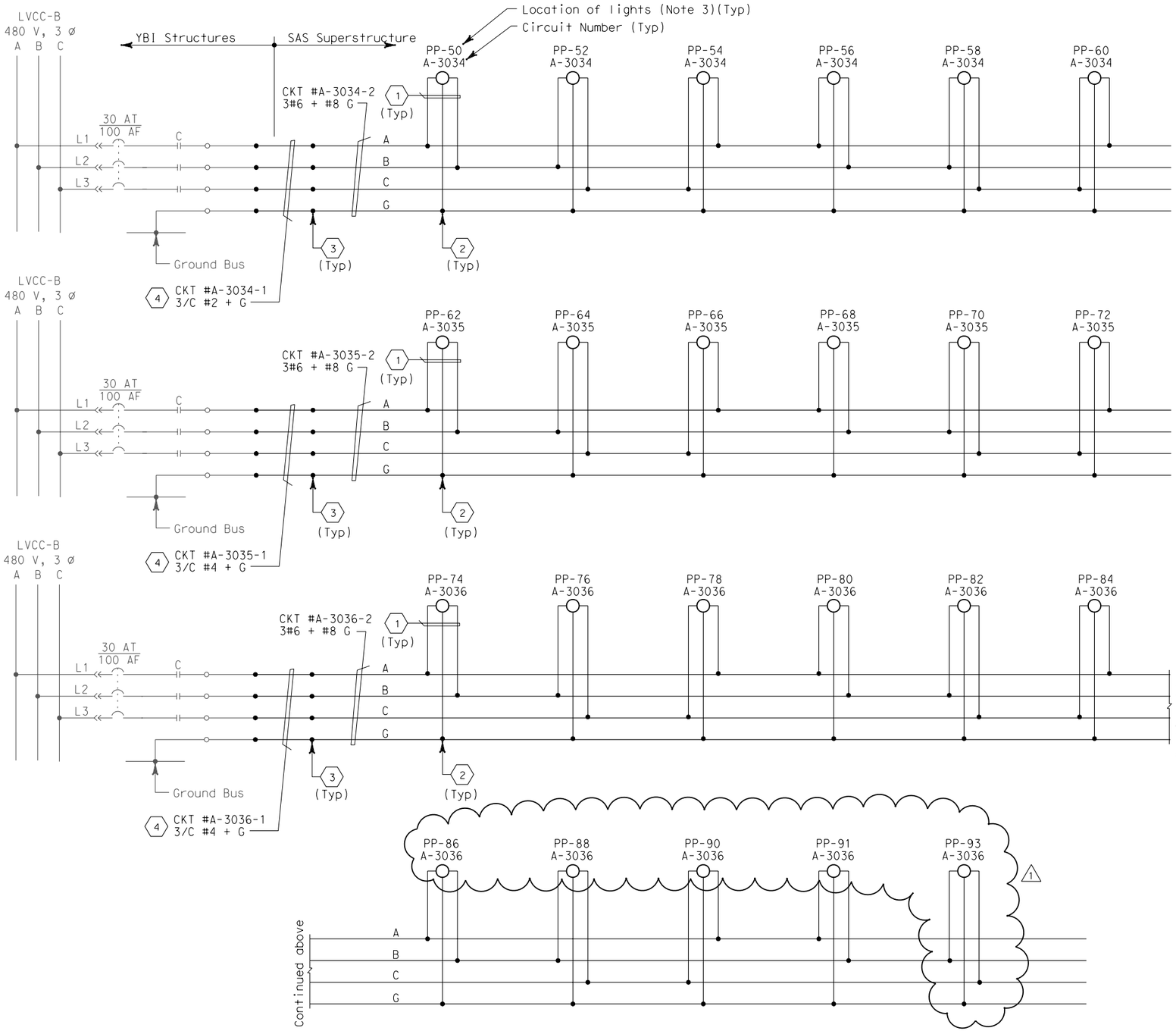

480 V SUSPENDER UPLIGHT LIGHTING

DIST	COUNTY	ROUTE	KILOMETER POST TOTAL PROJECT	SHEET No	TOTAL SHEETS
04	SF	80	13.2/13.9	257R1	1204

REGISTERED ELECTRICAL ENGINEER — 12/19/02

12-6-04
PLANS APPROVAL DATE

REGISTERED PROFESSIONAL ENGINEER — JENS ERLINGSSON No. 8249 Exp. 9/30/06 ELECTRICAL — STATE OF CALIFORNIA

PB POWER, Inc.
A Parsons Brinckerhoff Company
303 Second St., Suite 700N
San Francisco, CA 94107-1317

The State of California or its officers or agents shall not be responsible for the accuracy or completeness of electronic copies of this plan sheet.

Caltrans now has a web site! To get to the web site, go to http://www.dot.ca.gov

SHEET NOTES:

(1) 2/C #10 + G, type SO cord.

(2) Conductors spliced inside pull box PB-LTG.

(3) Conductors spliced inside junction box PB-2A located inside girder.

(4) The Contractor shall extend and coil 5 meters of cable in manhole 25. All cables shall be tagged with circuits numbers as shown.

NOTES:

1. Use multi-conductor cable if circuit is routed via trays.
2. References:
   - For typical pull box schedule, see sheets E-83 and E-169.
   - For circuit and conduit/cable tray schedules, see sheets starting at E-401.
3. For number of lighting fixtures see Lighting Fixture Schedule sheets E-271 and 272.

REGISTERED PROFESSIONAL ENGINEER — MARRELL FUMIO TAKATA No. E 8651 Exp. 9/30/2008 ELECTRICAL — STATE OF CALIFORNIA

FOR REVISION ONLY

REQUEST FOR INFORMATION NOT ADDRESSED IN THIS CCO REMAIN IN FORCE					
MARK	DATE	REVISIONS DESCRIPTIONS	BY	CH'D	CCO#
1	02/19/08	ELECTRICAL MODIFICATIONS	MP EL	RR	42

CONTRACT CHANGE ORDER NO._____
SHEET _____ OF _____

DETAILS
TOWER AND SUSPENSION CABLE
480 V MAIN SUSPENSION CABLE LIGHTING WIRING DIAGRAM

NO SCALE

E-245

REVISED BY	DATE REVISED
DATE 09/01	11/01
JP	EDC
CALCULATED/ DESIGNED BY	CHECKED BY

DESIGN OVERSIGHT — BEHZAD GOLEMOHAMMADI

STATE OF CALIFORNIA - DEPARTMENT OF TRANSPORTATION — Caltrans

LAST REVISION 00-00-00 — DATE PLOTTED => 3/17/2008 TIME PLOTTED => 5:13:19 PM

FOR REDUCED PLANS ORIGINAL SCALE IS IN MILLIMETERS 0 20 40 60 80

DGN FILE =>T:\13103\MS\pse\SAS Struc\CCO\SAS CC042\04-0120f1_0257R01.dgn
USERNAME =>llorico

CU 04251 | EA 0120F1

DIST	COUNTY	ROUTE	KILOMETER POST TOTAL PROJECT	SHEET No	TOTAL SHEETS
04	SF	80	13.2/13.9	270R1	1204

12/19/02
REGISTERED ELECTRICAL ENGINEER DATE

12-6-04
PLANS APPROVAL DATE

REGISTERED PROFESSIONAL ENGINEER — JENS ERLINGSSON — No. 8249 — Exp. 9/30/06 — ELECTRICAL — STATE OF CALIFORNIA

PB POWER, Inc.
A Parsons Brinckerhoff Company
303 Second St., Suite 700N
San Francisco, CA 94107-1317

The State of California or its officers or agents shall not be responsible for the accuracy or completeness of electronic copies of this plan sheet.

Caltrans now has a web site! To get to the web site, go to http://www.dot.ca.gov

REGISTERED PROFESSIONAL ENGINEER — MAXWELL FUMIO TAKATA — No. E 8651 — Exp. 9/30/2008 — ELECTRICAL — STATE OF CALIFORNIA

FOR REVISION ONLY

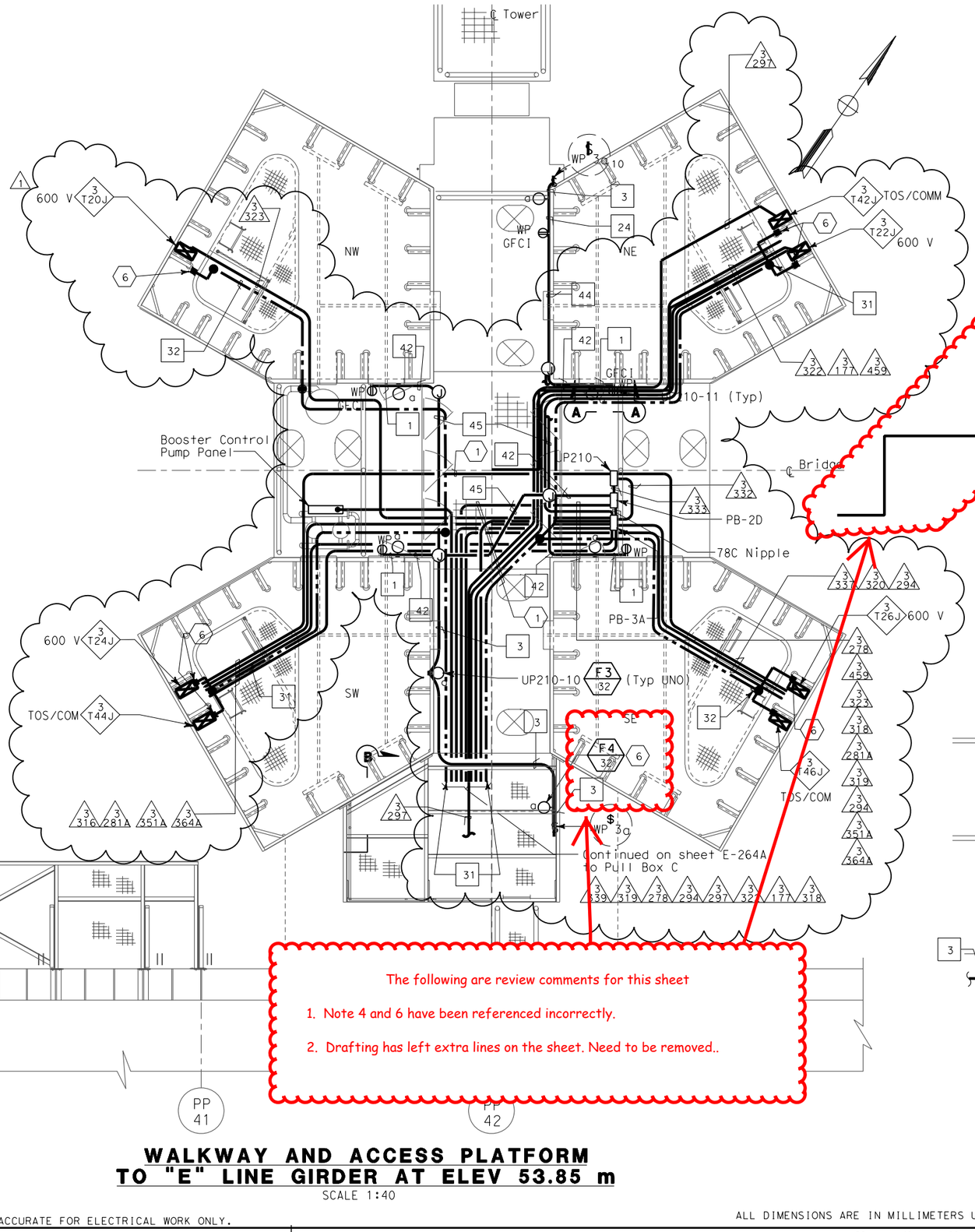

The following are review comments for this sheet

1. Note 4 and 6 have been referenced incorrectly.
2. Drafting has left extra lines on the sheet. Need to be removed..

WALKWAY AND ACCESS PLATFORM TO "E" LINE GIRDER AT ELEV 53.85 m

SCALE 1:40

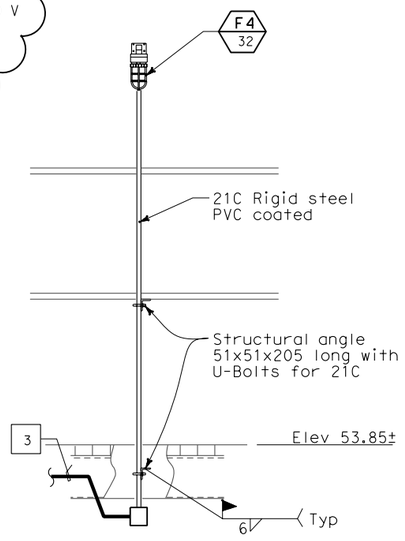

DETAIL 1

NO SCALE

SHEET NOTES:

1. All conduits which thereafter cross the access walkways shall be raised to a level of at least 2438 above the grating to pass overhead, allowing free walkways on the remaining three quadrants of the platform. Door on north face of SE tower shaft shall remain accesible.
2. Down to elev. 3.0 m, see sheet E-231.
3. For continuation, see sheet E-266.
4. See Detail 1, this drawing.
5. 250 kcmil Copper conductor down to Elevation 3.0 Sheet E-231.
6. #4/0 Bare copper conductor bonded to all cable trays (Typ.)

NOTES:

1. References:
   - For typical conduit installation details, see sheet E-268.
   - For utility panel UP-210 schedule, see sheet E-278.
   - For types of pull boxes, splice boxes and enclosures, see sheets E-83 and E-169.
   - For conduit and cable tray schedules, see sheets starting at E-401.
   - For lighting fixture schedule, see sheet E-273.
   - For vertical conduit runs support system, see sheet E-287.
   - For Section A-A, see sheet E-285.
   - For lighting installation details, see sheet E-267.
2. Electrical conduits shall enter the tower shafts between stiffeners A3 and A4 only for conduits going up or down inside the tower shafts between C1 and C2 only. For conduit entry details, see Structural Utility drawings.
3. All conduits and fittings routed exposed at grating shall be rigid galvanized steel, PVC coated.
4. Fixture mounting height elevation shall be 2.125 m above floor/platform elevation UNO.
5. For other related work not shown on this sheet, see Electrical Special Provisions.
6. For Section B-B, see sheet EE-264A.
7. Typical conduit installation. See Detail 8, sheet E-268.

REQUEST FOR INFORMATION NOT ADDRESSED IN THIS CCO REMAIN IN FORCE

MARK	DATE	REVISIONS DESCRIPTIONS	BY	CH'D	CCO#
1	02/19/08	ELECTRICAL MODIFICATIONS	MP EL	RR	42

CONTRACT CHANGE ORDER NO._____
SHEET _____ OF _____

DETAILS
TOWER AND SUSPENSION CABLE TOWER POWER AND LIGHTING

SCALE AS NOTED

E-264

DESIGN OVERSIGHT	CALCULATED/ DESIGNED BY	CHECKED BY	FK	EDC	DATE 10/01	11/01	REVISED BY	DATE REVISED
BEHZAD GOLEMOHAMMADI								

STATE OF CALIFORNIA - DEPARTMENT OF TRANSPORTATION — Caltrans

THIS PLAN ACCURATE FOR ELECTRICAL WORK ONLY.

ALL DIMENSIONS ARE IN MILLIMETERS UNLESS OTHERWISE SHOWN.

FOR REDUCED PLANS ORIGINAL SCALE IS IN MILLIMETERS 0 20 40 60 80

DGN FILE =>T:\13103\MS\pse\SAS Struc\CCO\SAS CCO42\04-0120f1_270R01.dgn
USERNAME =>llorico

CU 04251 EA 0120F1

LAST REVISION 00-00-00 DATE PLOTTED => 3/17/2008 TIME PLOTTED => 5:13:40 PM

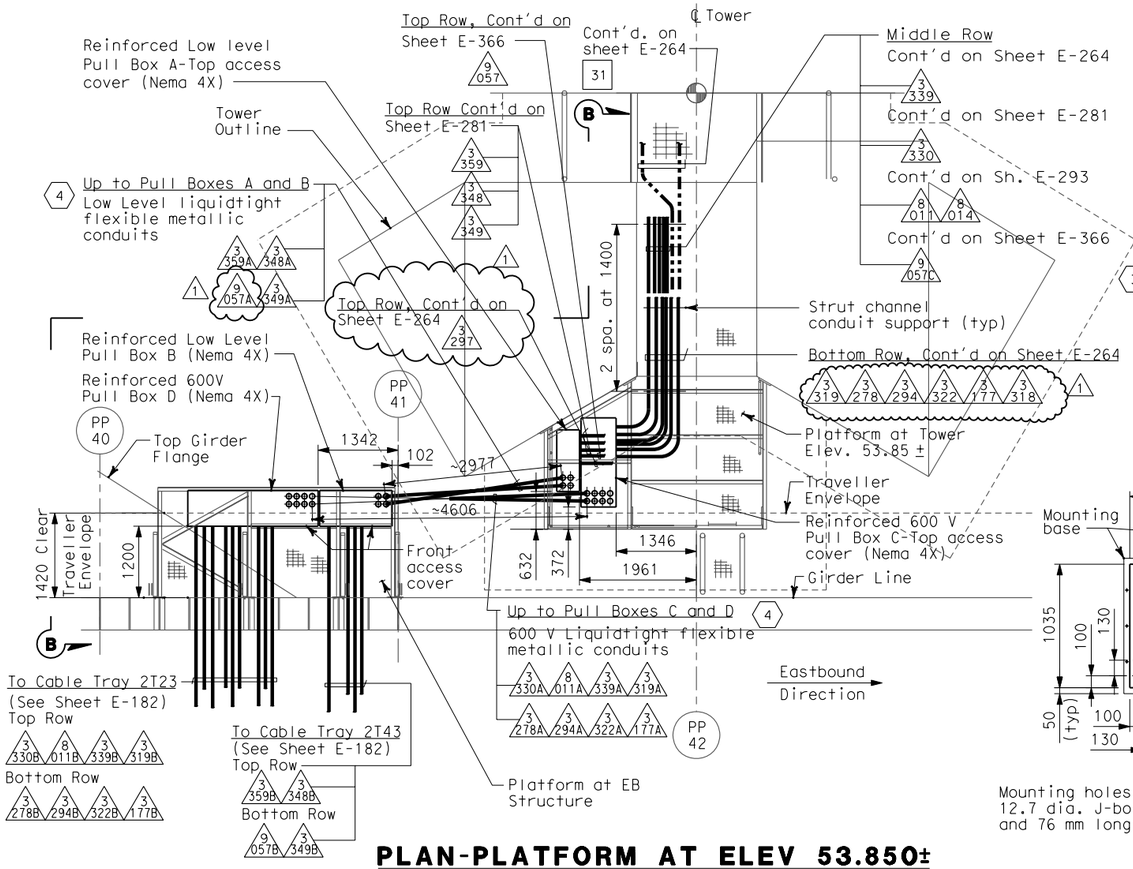

PLAN-PLATFORM AT ELEV 53.850±

SCALE 1:50

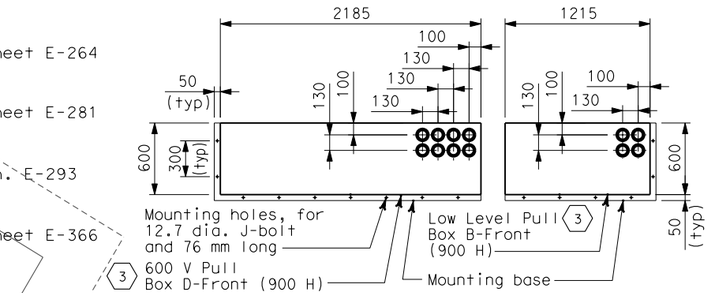

DETAIL 1

BOTTOM PLAN OF PULL BOXES
LOCATED AT EB STRUCTURE PLATFORM
SCALE 1:25

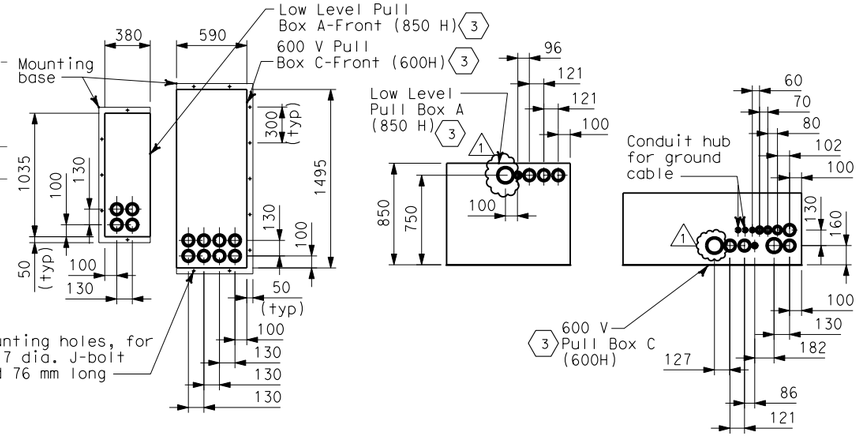

DETAIL 2

BOTTOM PLAN OF PULL BOXES
LOCATED AT TOWER PLATFORM
SCALE 1:25

DETAIL 3

FRONT ELEVATION OF PULL BOXES
LOCATED AT TOWER PLATFORM
SCALE 1:25

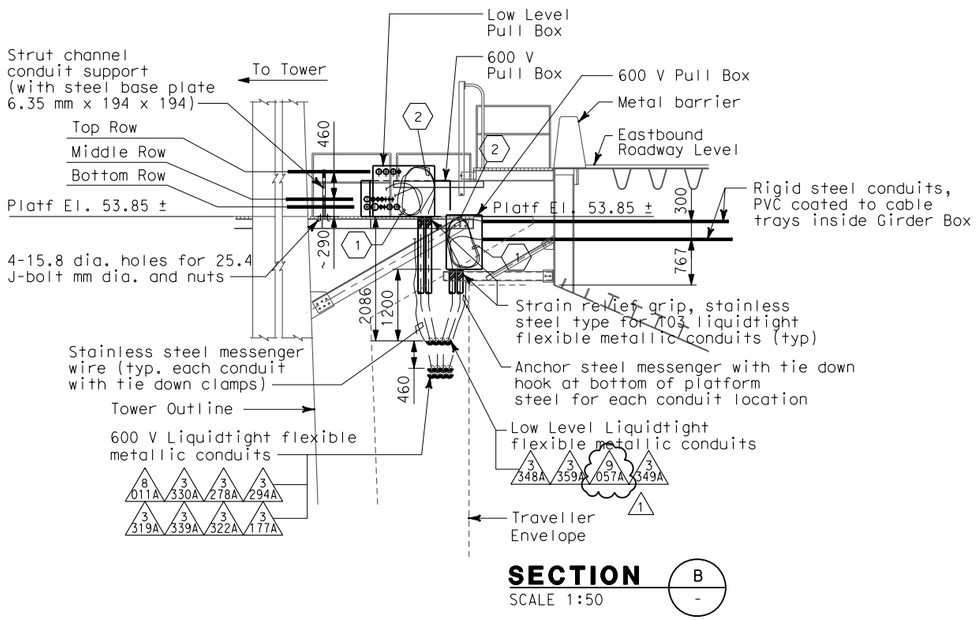

SECTION B

SCALE 1:50

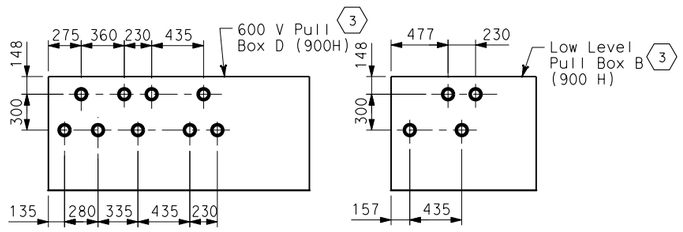

DETAIL 4

FRONT ELEVATION OF PULL BOXES
LOCATED AT EB STRUCTURE PLATFORM
SCALE 1:25

SHEET NOTES

1. Coil 3 meters long of cable for each circuits inside the pull boxes.
2. Provide hooked cable support grips for cable or groups of cables at each liquidtight flexible metallic conduit inside the pull box.
3. Pull Box shall be fabricated of Nema 4X stainless steel, type 304. Pull Box shall be of reinforced construction to provide vertical support at bottom side of box for weighted conduit and cables inside. The top side of the Pull Box shall be reinforced and provided with hooks for cable support grips inside the pull box.
4. Electrical conduit design between Eastbound Structure and Main Tower is based on the maximum expansion of 1000 mm all directions.

NOTES

1. For location of sleeves Eastbound Structure PP-40 and PP-41, see Structural Plans.
2. Each liquidtight flexible metallic conduit shall be provided with #6 green insulated ground conductor outside the conduit.

FOR REVISION ONLY

REQUEST FOR INFORMATION NOT ADDRESSED IN THIS CCO REMAIN IN FORCE					
1	02/19/08	ELECTRICAL MODIFICATIONS	MP EL	RR	42
MARK	DATE	DESCRIPTIONS	BY	CH'D	CCO#
REVISIONS					

CONTRACT CHANGE ORDER NO._____
SHEET _____ OF _____

DETAILS
TOWER AND SUSPENSION CABLE

SCALE: AS NOTED

E-264A

DIST	COUNTY	ROUTE	KILOMETER POST TOTAL PROJECT	SHEET No	TOTAL SHEETS
04	SF	80	13.2/13.9	271R1	1204

Jens Erlingsson 12/19/02
REGISTERED ELECTRICAL ENGINEER DATE

12-6-04
PLANS APPROVAL DATE

REGISTERED PROFESSIONAL ENGINEER — JENS ERLINGSSON No. 8249 Exp. 9/30/06 ELECTRICAL — STATE OF CALIFORNIA

PB POWER, Inc.
A Parsons Brinckerhoff Company
303 Second St., Suite 700N
San Francisco, CA 94107-1317

The State of California or its officers or agents shall not be responsible for the accuracy or completeness of electronic copies of this plan sheet.

Caltrans now has a web site! To get to the web site, go to http://www.dot.ca.gov

REGISTERED PROFESSIONAL ENGINEER — MARNELL FUMIO TAKAKI No. E 8651 Exp. 9/30/2008 ELECTRICAL — STATE OF CALIFORNIA

DESIGN OVERSIGHT	CALCULATED/ DESIGNED BY	DATE	REVISED BY
BEHZAD GOLEMOHAMMADI	CHECKED BY	JE	3/04
STATE OF CALIFORNIA - DEPARTMENT OF TRANSPORTATION	EJL	3/04	DATE REVISED

THIS PLAN ACCURATE FOR ELECTRICAL WORK ONLY.

ALL DIMENSIONS ARE IN MILLIMETERS UNLESS OTHERWISE SHOWN.

FOR REDUCED PLANS ORIGINAL SCALE IS IN MILLIMETERS 0 20 40 60 80

DGN FILE =>T:\13103\MS\pse\SAS Struc\CCO\SAS CC042\04-0120f1_0271R01.dgn
USERNAME =>llorico

CU 04251

EA 0120F1

DATE PLOTTED => 3/17/2008
TIME PLOTTED => 5:14:01 PM

LAST REVISION 00-00-00

DIST	COUNTY	ROUTE	KILOMETER POST TOTAL PROJECT	SHEET No	TOTAL SHEETS
04	SF	80	13.2/13.9	272R1	1204

Caltrans Metric

James Erlingsson 12/19/02
REGISTERED ELECTRICAL ENGINEER DATE

12-6-04
PLANS APPROVAL DATE

REGISTERED PROFESSIONAL ENGINEER — JENS ERLINGSSON — No. 8249 — Exp. 9/30/06 — ELECTRICAL — STATE OF CALIFORNIA

PB POWER, Inc.
A Parsons Brinckerhoff Company
303 Second St., Suite 700N
San Francisco, CA 94107-1317

The State of California or its officers or agents shall not be responsible for the accuracy or completeness of electronic copies of this plan sheet.

Caltrans now has a web site! To get to the web site, go to http://www.dot.ca.gov

REGISTERED PROFESSIONAL ENGINEER — MAXWELL FUMIO TAKAKI — No. E 8651 — Exp. 9/30/2008 — ELECTRICAL — STATE OF CALIFORNIA

FOR REVISION ONLY

REQUEST FOR INFORMATION NOT ADDRESSED IN THIS CCO REMAIN IN FORCE

MARK	DATE	DESCRIPTIONS	BY	CH'D	CCO#
		REVISIONS			
1	02/19/08	ELECTRICAL MODIFICATIONS	MP EL	RR	42

CONTRACT CHANGE ORDER NO._____
SHEET _____ OF _____

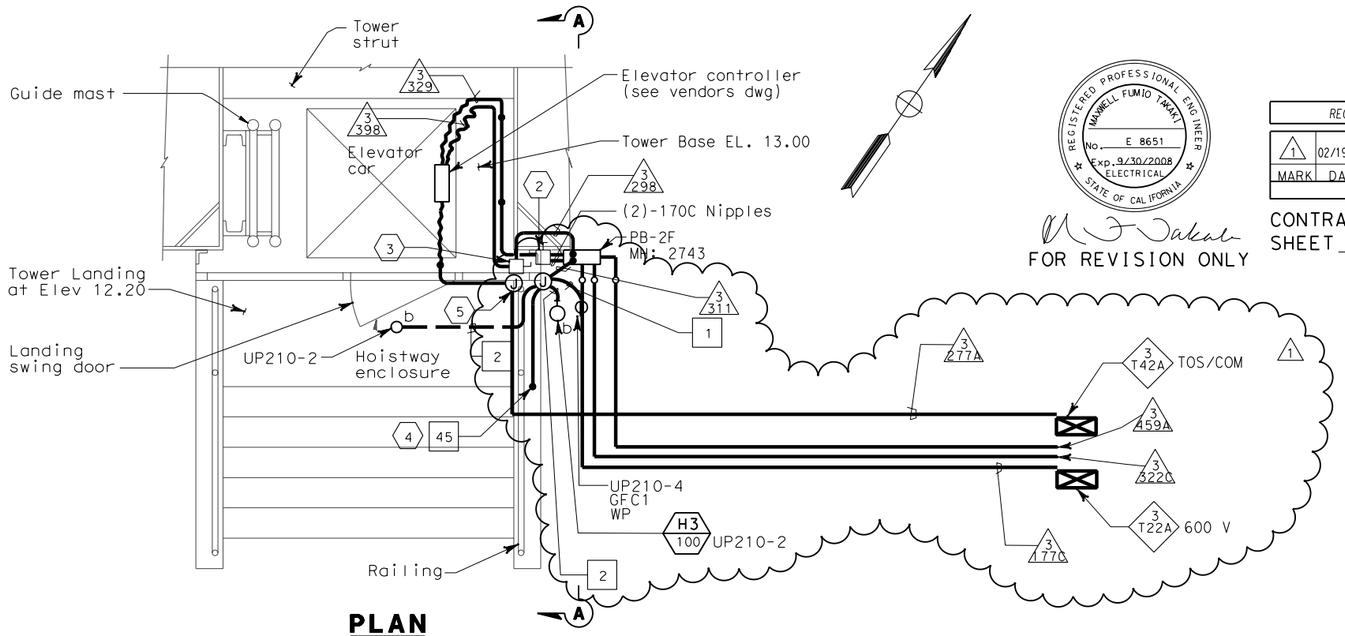

PLAN
TOWER BASE ELEVATOR ENCLOSURE

SCALE 1:20

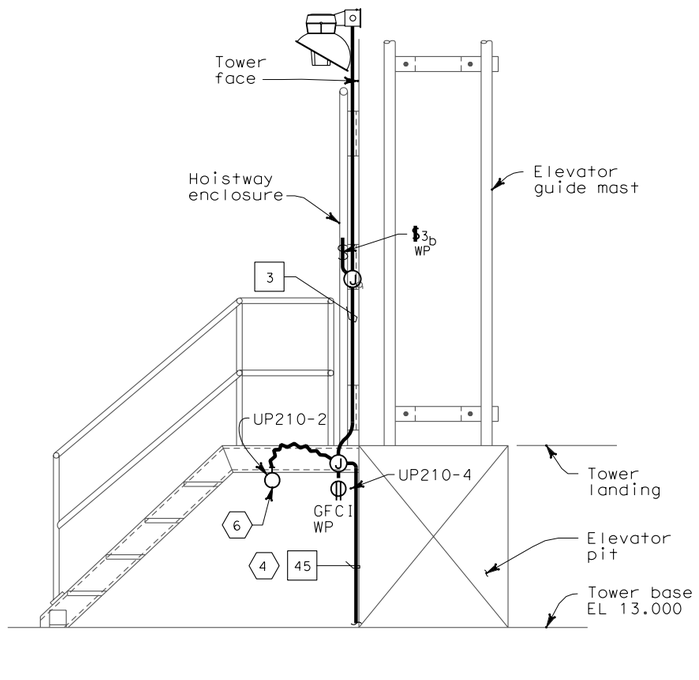

SECTION A-A

SCALE 1:20

THIS PLAN ACCURATE FOR ELECTRICAL WORK ONLY.

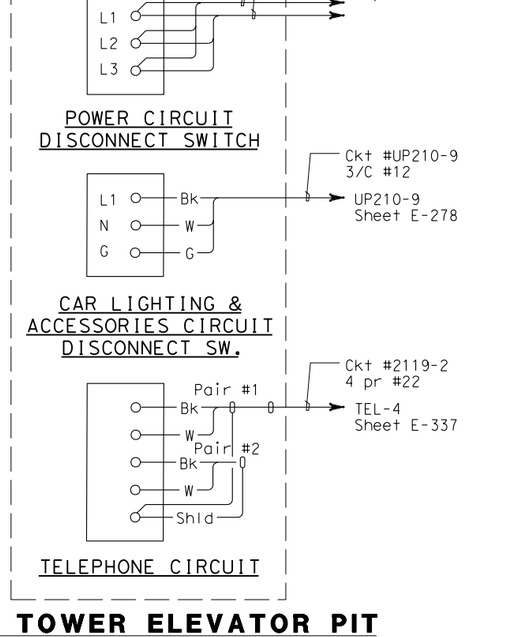

MAIN TOWER ELEVATOR PIT CONNECTION DIAGRAM

ALL DIMENSIONS ARE IN MILLIMETERS UNLESS OTHERWISE SHOWN.

SHEET NOTES:

1. Deleted. 1
2. 480 V, 3 ø, 100 A, non-fused disconnect switch for elevator pit motor. Use liquid tight flexible conduit from disconnect switch to the motor.
3. 120 V single pole single throw disconnect switch for elevator lighting and fan.
4. Down to elevation 9.0 m. See sheet E-266.
5. PB-TOS for telephone communication lines.
6. Elevator pit light fixture shall be located a maximum of 450 mm from access ladder and 915 mm above lowest landing.
7. For lighting and receptacles in this area, see sheet E-266.

NOTES:

1. References:
   - For utility panel UP-210 schedule, see sheet E-278.
   - For types of pull boxes, splice boxes and enclosures, see sheets E-83 and E-169.
   - For conduit and cable tray schedules, see sheets starting at E-401.
   - For lighting fixture schedule, see sheet E-273.
   - For vertical conduit runs support system, see sheet E-287.
   - For typical lighting installation details, see sheet E-267.
   - For typical conduit installation details, see sheet E-268.
2. Electrical conduits shall enter the tower shafts between stiffeners A3 and A4 only. For conduit entry details, see Structural Utility drawings
3. Fixture mounting height elevation shall be 2.4 m above floor/platform elevation UNO.
4. All conduits and fittings routed exposed at grating shall be rigid galvanized steel, PVC coated.
5. For other related work not shown on this sheet, see Electrical Special Provisions.

DETAILS
TOWER AND SUSPENSION CABLE
TOWER POWER AND LIGHTING

SCALE AS NOTED

E-265

STATE OF CALIFORNIA - DEPARTMENT OF TRANSPORTATION
Caltrans
DESIGN OVERSIGHT
BEHZAD GOLEMOHAMMADI

CALCULATED/ DESIGNED BY	CHECKED BY	DATE 10/01	REVISED BY
FK	EDC	11/01	DATE REVISED

LAST REVISION 00-00-00
DATE PLOTTED => 3/17/2008
TIME PLOTTED => 5:14:28 PM

FOR REDUCED PLANS ORIGINAL SCALE IS IN MILLIMETERS 0 20 40 60 80

DGN FILE =>T:\13103\MS\pse\SAS Struc\CCO\SAS CC042\04-0120f1_272R01.dgn
USERNAME =>llorico

CU 04251

EA 0120F1

DIST	COUNTY	ROUTE	KILOMETER POST TOTAL PROJECT	SHEET No	TOTAL SHEETS
04	SF	80	13.2/13.9	273R1	1204

Caltrans Metric

Jens Erlingsson 12/19/02
REGISTERED ELECTRICAL ENGINEER DATE

12-6-04
PLANS APPROVAL DATE

REGISTERED PROFESSIONAL ENGINEER — JENS ERLINGSSON No. 8249 Exp. 9/30/06 ELECTRICAL — STATE OF CALIFORNIA

PB POWER, Inc.
A Parsons Brinckerhoff Company
303 Second St., Suite 700N
San Francisco, CA 94107-1317

The State of California or its officers or agents shall not be responsible for the accuracy or completeness of electronic copies of this plan sheet.

Caltrans now has a web site! To get to the web site, go to http://www.dot.ca.gov

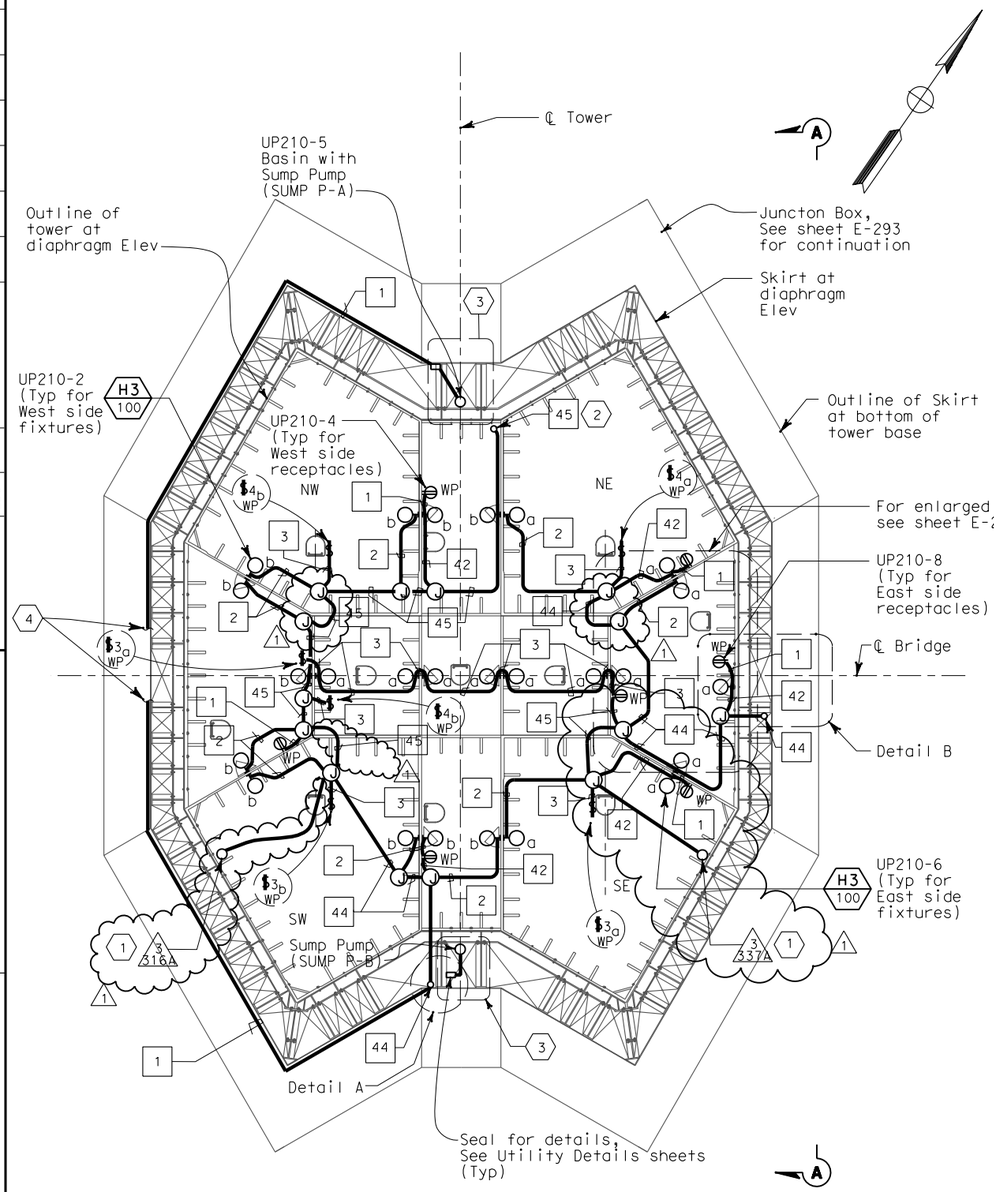

PLAN AT ELEV 9.0 m
SCALE 1:100

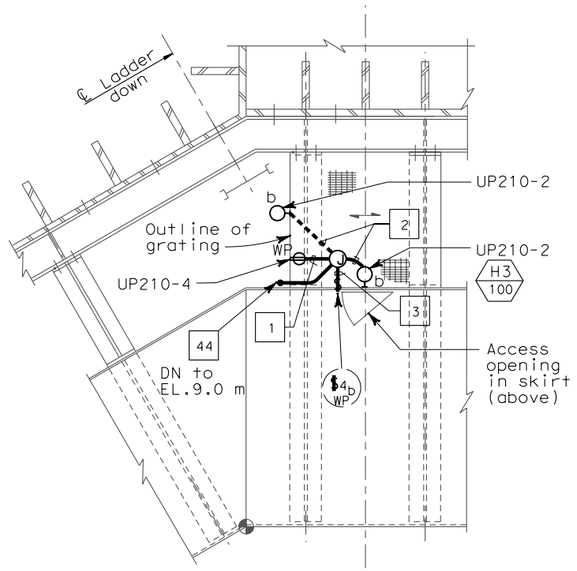

DETAIL A
SCALE 1:25

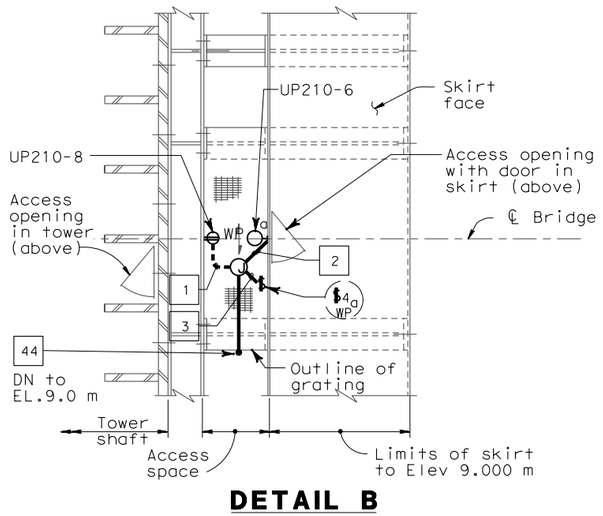

DETAIL B
1:25

SHEET NOTES:

1. Up to 600V cable tray at Elevation 13m.
2. For continuation, see sheet E-265.
3. For Sump Pump Basin installation, see Detail 6 on sheet E-267.
4. Contnue conduit to junction box on E-231.

NOTES:

1. References:
   - For vertical conduit runs support system, see sheet E-287.
   - For utility panel UP-210 schedule, see sheet E-278.
   - For types of pull boxes, splice boxes and enclosures, see sheets E-83 and E-169.
   - For conduit and cable tray schedule, see sheets starting at E-401.
   - For lighting installation details, see sheet E-267.
   - For lighting fixture schedule, see sheet E-273.
   - For typical conduit installation details, see sheet E-268.
2. All conduits and fittings routed exposed at grating shall be rigid galvanized steel, PVC coated.
3. Electrical conduits shall enter the tower shafts between stiffeners A3 and A4 only. For conduit entry details, see Structral Utility drawings.
4. Fixture mounting height elevation shall be 2.4 m above floor/platform elevation UNO.
5. For other related work not shown on this sheet, see Electrical Special Provisions.

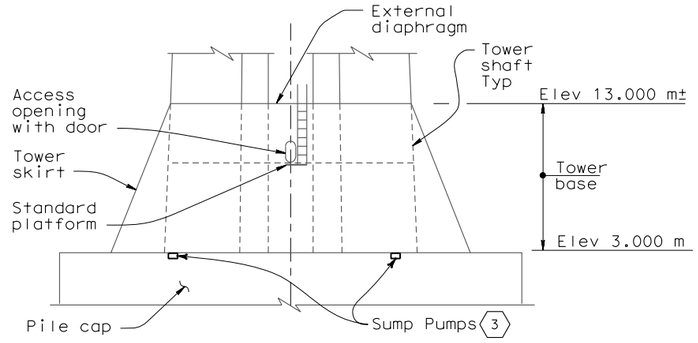

SECTION A-A
1:200

DETAILS
TOWER AND SUSPENSION CABLE TOWER POWER AND LIGHTING
SCALE AS NOTED

E-266

REGISTERED PROFESSIONAL ENGINEER — MAXWELL FUMIO TAKATA No. E 8651 Exp. 9/30/2008 ELECTRICAL — STATE OF CALIFORNIA

FOR REVISION ONLY

REQUEST FOR INFORMATION NOT ADDRESSED IN THIS CCO REMAIN IN FORCE					
1	02/19/08	ELECTRICAL MODIFICATIONS	MP EL	RR	42
MARK	DATE	DESCRIPTIONS	BY	CH'D	CCO#
REVISIONS					

CONTRACT CHANGE ORDER NO. _____
SHEET _____ OF _____

THIS PLAN ACCURATE FOR ELECTRICAL WORK ONLY.

ALL DIMENSIONS ARE IN MILLIMETERS UNLESS OTHERWISE SHOWN.

CALCULATED/ DESIGNED BY	CHECKED BY
FK	EDC

MARK	DATE	REVISED BY	DATE REVISED
	10/01		11/01
		AB	2/04

STATE OF CALIFORNIA - DEPARTMENT OF TRANSPORTATION
Caltrans
DESIGN OVERSIGHT
BEHZAD GOLEMMOHAMMADI

LAST REVISION 00-00-00
DATE PLOTTED => 3/17/2008
TIME PLOTTED => 5:14:52 PM

FOR REDUCED PLANS ORIGINAL SCALE IS IN MILLIMETERS 0 20 40 60 80

DGN FILE =>T:\13103\MS\pse\SAS Struc\CCO\SAS CC042\04-0120f1_0273R01.dgn
USERNAME =>llorico

CU 04251

EA 0120F1

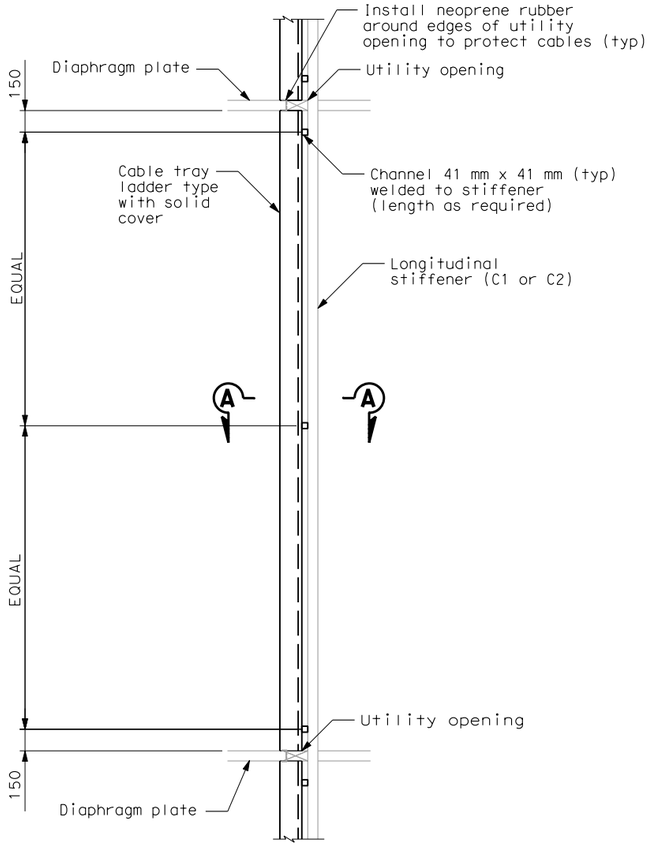

DETAIL 1
ELEVATION VIEW

TOWER CABLE TRAY
TYPICAL INSTALLATION
SCALE: 1:20

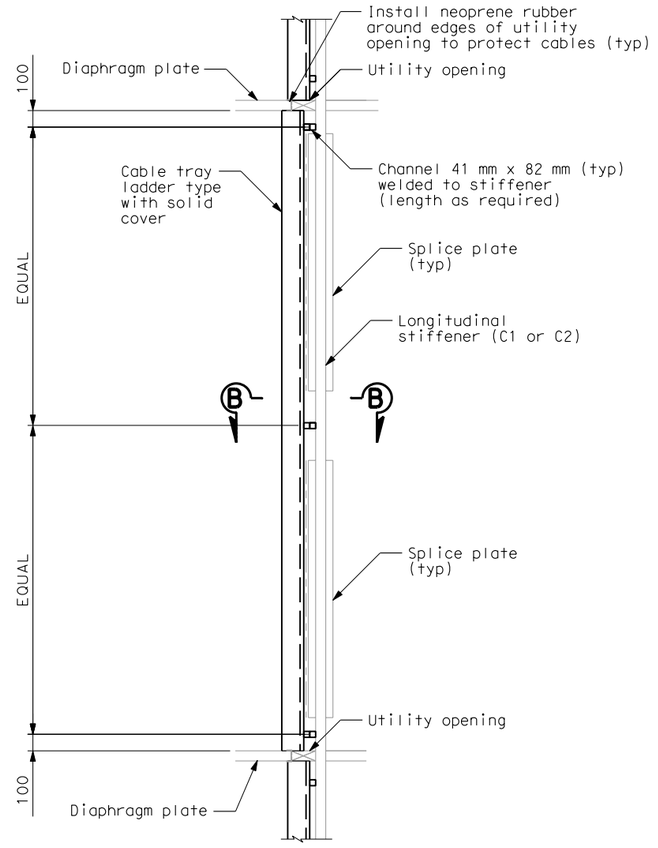

DETAIL 2
ELEVATION VIEW

TOWER CABLE TRAY
TYPICAL INSTALLATION
ALONG SPLICE PLATE
SCALE: 1:20

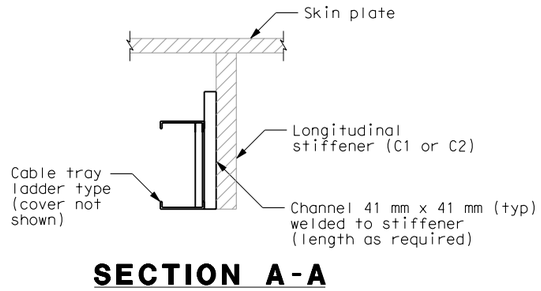

SECTION A-A
SCALE: 1:10

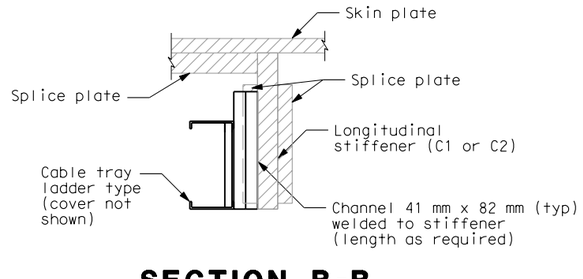

SECTION B-B
SCALE: 1:10

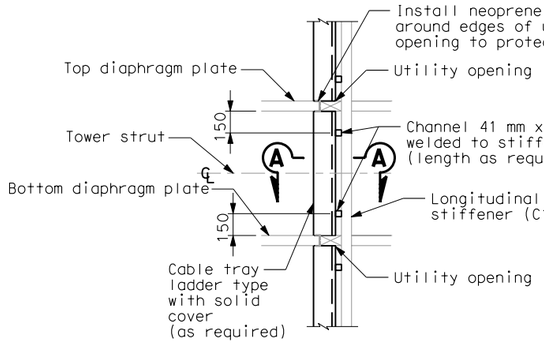

DETAIL 3
ELEVATION VIEW

TOWER CABLE TRAY
TYPICAL INSTALLATION
ALONG TOWER STRUT AREA
SCALE: 1:20

NOTES:

1. TOS/Communication cable trays shall be installed along C2 stiffeners.
2. 600V cable trays shall be installed along C1 stiffeners.
3. See Sheets E- 270B AND E-270C for cable trays location.
4. Provide strut channels on C1 and C2 stiffeners in each tower shaft from elevations 3 m through 143 m.

DETAILS
TOWER AND SUSPENSION CABLE
CABLE TRAY LOCATION

SCALE AS NOTED

E-270A

DIST	COUNTY	ROUTE	KILOMETER POST TOTAL PROJECT	SHEET No	TOTAL SHEETS
04	SF	80	13.2/13.9	275S1	1204

8/24/07
REGISTERED ELECTRICAL ENGINEER DATE

REGISTERED PROFESSIONAL ENGINEER — MAXWELL FUMIO TAKAKI — No. E 8651 — Exp. 9/30/2008 — ELECTRICAL — STATE OF CALIFORNIA

PLANS APPROVAL DATE

PB AMERICAS, Inc.
A Parsons Brinckerhoff Company
303 Second St., Suite 700N
San Francisco, CA 94107-1317

The State of California or its officers or agents shall not be responsible for the accuracy or completeness of electronic copies of this plan sheet.

Caltrans now has a web site! To get to the web site, go to http://www.dot.ca.gov

REQUEST FOR INFORMATION NOT ADDRESSED IN THIS CCO REMAIN IN FORCE

MARK	DATE	DESCRIPTIONS	BY	CH'D	CCO#
		REVISIONS			
0	02/19/08	ELECTRICAL MODIFICATIONS	MP EL	RR	42

CONTRACT CHANGE ORDER NO._____
SHEET _____ OF _____

	DATE	REVISED BY
CALCULATED/ DESIGNED BY	RG	3/07
CHECKED BY	RR	7/07

DESIGN OVERSIGHT
BEHZAD GOLEMOHAMMADI

STATE OF CALIFORNIA - DEPARTMENT OF TRANSPORTATION
Caltrans

LAST REVISION 00-00-00
DATE PLOTTED => 3/17/2008
TIME PLOTTED => 5:15:14 PM

ALL DIMENSIONS ARE IN MILLIMETERS UNLESS OTHERWISE SHOWN.

FOR REDUCED PLANS ORIGINAL SCALE IS IN MILLIMETERS 0 20 40 60 80

DGN FILE =>T:\13103\MS\pse\SAS Struc\CCO\SAS CC042\04-0120f1_0275S01.dgn
USERNAME =>llorico

CU 04251

EA 0120F1

DIST	COUNTY	ROUTE	KILOMETER POST TOTAL PROJECT	SHEET No	TOTAL SHEETS
04	SF	80	13.2/13.9	275S2	1204

REGISTERED ELECTRICAL ENGINEER — 8/24/07 DATE

REGISTERED PROFESSIONAL ENGINEER — MANUEL FUMIO TAKATA — No. E 8651 — Exp. 9/30/2008 ELECTRICAL — STATE OF CALIFORNIA

PLANS APPROVAL DATE

PB AMERICAS, Inc.
A Parsons Brinckerhoff Company
303 Second St., Suite 700N
San Francisco, CA 94107-1317

The State of California or its officers or agents shall not be responsible for the accuracy or completeness of electronic copies of this plan sheet.

Caltrans now has a web site! To get to the web site, go to http://www.dot.ca.gov

TOWER 600 V CABLE TRAY LOCATION

TOWER	CL DIAPHRAGM (ELEVATION)	CABLE TRAY ID
NW	47.600 m	3T20H
NW	53.000 m	3T20J
NW	56.000 m	3T20K
NW	59.000 m	3T20L
NW	62.000 m	3T20M
NW	65.000 m	3T20N
NW	68.000 m	3T20P
NW	71.000 m	3T20Q
NW	74.000 m	3T20R
NW	77.000 m	3T20S
NW	80.750 m	3T21A
NW	85.250 m	3T21B
NW	89.000 m	3T21C
NW	92.500 m	3T21D
NW	95.500 m	3T21E
NW	99.000 m	3T21F
NW	102.500 m	3T21G
NW	105.500 m	3T21H
NW	109.000 m	3T21J
NW	111.670 m	3T21K
NW	116.330 m	3T21L
NW	119.000 m	3T21M
NW	123.000 m	3T21N
NW	127.000 m	3T21P
NW	131.000 m	3T21Q
NW	135.000 m	3T21R
NW	139.000 m	3T21S

TOWER	CL DIAPHRAGM (ELEVATION)	CABLE TRAY ID
NE	13.000 m	3T22A
NE	15.000 m	3T22AA
NE	18.000 m	3T22B
NE	23.000 m	3T22C
NE	28.000 m	3T22D
NE	33.000 m	3T22E
NE	38.000 m	3T22F
NE	43.000 m	3T22G
NE	47.600 m	3T22H
NE	53.000 m	3T22J
NE	56.000 m	3T22K

TOWER	CL DIAPHRAGM (ELEVATION)	CABLE TRAY ID
SW	13.000 m	3T24A
SW	15.000 m	3T24AA
SW	18.000 m	3T24B
SW	23.000 m	3T24C
SW	28.000 m	3T24D
SW	33.000 m	3T24E
SW	38.000 m	3T24F
SW	43.000 m	3T24G
SW	47.600 m	3T24H
SW	53.000 m	3T24J
SW	56.000 m	3T24K
SW	59.000 m	3T24L
SW	62.000 m	3T24M
SW	65.000 m	3T24N
SW	68.000 m	3T24P
SW	71.000 m	3T24Q
SW	74.000 m	3T24R
SW	77.000 m	3T24S
SW	80.750 m	3T25A
SW	85.250 m	3T25B
SW	89.000 m	3T25C
SW	92.500 m	3T25D
SW	95.500 m	3T25E
SW	99.000 m	3T25F
SW	102.500 m	3T25G
SW	105.500 m	3T25H
SW	109.000 m	3T25J
SW	111.670 m	3T25K
SW	116.330 m	3T25L
SW	119.000 m	3T25M
SW	123.000 m	3T25N
SW	127.000 m	3T25P
SW	131.000 m	3T25Q
SW	135.000 m	3T25R
SW	139.000 m	3T25S

TOWER	CL DIAPHRAGM (ELEVATION)	CABLE TRAY ID
SE	13.000 m	3T26A
SE	15.000 m	3T26AA
SE	18.000 m	3T26B
SE	23.000 m	3T26C
SE	28.000 m	3T26D
SE	33.000 m	3T26E
SE	38.000 m	3T26F
SE	43.000 m	3T26G
SE	47.600 m	3T26H
SE	53.000 m	3T26J
SE	56.000 m	3T26K
SE	59.000 m	3T26L
SE	62.000 m	3T26M
SE	65.000 m	3T26N
SE	68.000 m	3T26P
SE	71.000 m	3T26Q
SE	74.000 m	3T26R
SE	77.000 m	3T26S
SE	80.750 m	3T27A
SE	85.250 m	3T27B
SE	89.000 m	3T27C
SE	92.500 m	3T27D
SE	95.500 m	3T27E
SE	99.000 m	3T27F
SE	102.500 m	3T27G
SE	105.500 m	3T27H
SE	109.000 m	3T27J
SE	111.670 m	3T27K
SE	116.330 m	3T27L
SE	119.000 m	3T27M
SE	123.000 m	3T27N
SE	127.000 m	3T27P
SE	131.000 m	3T27Q
SE	135.000 m	3T27R
SE	139.000 m	3T27S

TOWER TOS/COM CABLE TRAY LOCATION

TOWER	CL DIAPHRAGM (ELEVATION)	CABLE TRAY ID

TOWER	CL DIAPHRAGM (ELEVATION)	CABLE TRAY ID
NE	13.000 m	3T42A
NE	15.000 m	3T42AA
NE	18.000 m	3T42B
NE	23.000 m	3T42C
NE	28.000 m	3T42D
NE	33.000 m	3T42E
NE	38.000 m	3T42F
NE	43.000 m	3T42G
NE	47.600 m	3T42H
NE	53.000 m	3T42J
NE	56.000 m	3T42K
NE	59.000 m	3T42L
NE	62.000 m	3T42M
NE	65.000 m	3T42N
NE	68.000 m	3T42P
NE	71.000 m	3T42Q
NE	74.000 m	3T42R
NE	77.000 m	3T42S
NE	80.750 m	3T43A
NE	85.250 m	3T43B
NE	89.000 m	3T43C
NE	92.500 m	3T43D
NE	95.500 m	3T43E
NE	99.000 m	3T43F
NE	102.500 m	3T43G
NE	105.500 m	3T43H
NE	109.000 m	3T43J
NE	111.670 m	3T43K
NE	116.330 m	3T43L
NE	119.000 m	3T43M
NE	123.000 m	3T43N
NE	127.000 m	3T43P
NE	131.000 m	3T43Q
NE	135.000 m	3T43R
NE	139.000 m	3T43S

TOWER	CL DIAPHRAGM (ELEVATION)	CABLE TRAY ID
SW	13.000 m	3T44A
SW	15.000 m	3T44AA
SW	18.000 m	3T44B
SW	23.000 m	3T44C
SW	28.000 m	3T44D
SW	33.000 m	3T44E
SW	38.000 m	3T44F
SW	43.000 m	3T44G
SW	47.600 m	3T44H
SW	53.000 m	3T44J
SW	56.000 m	3T44K
SW	59.000 m	3T44L
SW	62.000 m	3T44M
SW	65.000 m	3T44N
SW	68.000 m	3T44P
SW	71.000 m	3T44Q
SW	74.000 m	3T44R
SW	77.000 m	3T44S
SW	80.750 m	3T45A
SW	85.250 m	3T45B
SW	89.000 m	3T45C
SW	92.500 m	3T45D
SW	95.500 m	3T45E
SW	99.000 m	3T45F
SW	102.500 m	3T45G
SW	105.500 m	3T45H
SW	109.000 m	3T45J
SW	111.670 m	3T45K
SW	116.330 m	3T45L
SW	119.000 m	3T45M
SW	123.000 m	3T45N
SW	127.000 m	3T45P
SW	131.000 m	3T45Q
SW	135.000 m	3T45R
SW	139.000 m	3T45S

TOWER	CL DIAPHRAGM (ELEVATION)	CABLE TRAY ID
SE	47.600 m	3T46H
SE	53.000 m	3T46J
SE	56.000 m	3T46K
SE	59.000 m	3T46L
SE	62.000 m	3T46M
SE	65.000 m	3T46N
SE	68.000 m	3T46P
SE	71.000 m	3T46Q
SE	74.000 m	3T46R
SE	77.000 m	3T46S
SE	80.750 m	3T47A
SE	85.250 m	3T47B
SE	89.000 m	3T47C
SE	92.500 m	3T47D
SE	95.500 m	3T47E
SE	99.000 m	3T47F
SE	102.500 m	3T47G
SE	105.500 m	3T47H
SE	109.000 m	3T47J
SE	111.670 m	3T47K
SE	116.330 m	3T47L
SE	119.000 m	3T47M
SE	123.000 m	3T47N
SE	127.000 m	3T47P
SE	131.000 m	3T47Q
SE	135.000 m	3T47R
SE	139.000 m	3T47S

NOTES:

1. See Sheets E-270A and E-270C for tower cable trays location and typical installation details.

REQUEST FOR INFORMATION NOT ADDRESSED IN THIS CCO REMAIN IN FORCE

MARK	DATE	REVISIONS	MP EL	RR	42
0	02/19/08	ELECTRICAL MODIFICATIONS			
		DESCRIPTIONS	BY	CH'D	CCO#

CONTRACT CHANGE ORDER NO._____
SHEET _____ OF _____

DETAILS
TOWER AND AND SUSPENSION CABLE CABLE TRAY LOCATION

SCALE AS NOTED

E-270B

CALCULATED/ DESIGNED BY	CHECKED BY	DATE	REVISED BY	DATE REVISED
RG	RR	3/07	7/07	

DESIGN OVERSIGHT: BEHZAD GOLEMOHAMMADI

STATE OF CALIFORNIA - DEPARTMENT OF TRANSPORTATION

Caltrans

ALL DIMENSIONS ARE IN MILLIMETERS UNLESS OTHERWISE SHOWN.

FOR REDUCED PLANS ORIGINAL SCALE IS IN MILLIMETERS 0 20 40 60 80

DGN FILE =>T:\13103\MS\pse\SAS Struc\CCO\SAS CC042\04-0120f1_0275S02.dgn
USERNAME =>llorico

CU 04251

EA 0120F1

LAST REVISION 00-00-00 — DATE PLOTTED => 3/17/2008 — TIME PLOTTED => 5:16:04 PM

DIST	COUNTY	ROUTE	KILOMETER POST TOTAL PROJECT	SHEET No	TOTAL SHEETS
04	SF	80	13.2/13.9	275S3	1204

REGISTERED ELECTRICAL ENGINEER — 8/24/07

PLANS APPROVAL DATE

REGISTERED PROFESSIONAL ENGINEER — MARNELL FUMIO TAKAKI — No. E 8651 — Exp. 9/30/2008 ELECTRICAL — STATE OF CALIFORNIA

PB AMERICAS, Inc.
A Parsons Brinckerhoff Company
303 Second St., Suite 700N
San Francisco, CA 94107-1317

The State of California or its officers or agents shall not be responsible for the accuracy or completeness of electronic copies of this plan sheet.

Caltrans now has a web site! To get to the web site, go to http://www.dot.ca.gov

REQUEST FOR INFORMATION NOT ADDRESSED IN THIS CCO REMAIN IN FORCE					
0	02/19/08	ELECTRICAL MODIFICATIONS	MP EL	RR	42
MARK	DATE	DESCRIPTIONS REVISIONS	BY	CH'D	CCO#

CONTRACT CHANGE ORDER NO._____
SHEET _____ OF _____

	CALCULATED/ DESIGNED BY	RG	DATE 3/07	REVISED BY
	CHECKED BY	RR	7/07	DATE REVISED

STATE OF CALIFORNIA - DEPARTMENT OF TRANSPORTATION — Caltrans

DESIGN OVERSIGHT — BEHZAD GOLEMOHAMMADI

SECTION A-A (1)(4)
CABLE TRAY LAYOUT PLAN
NO SCALE

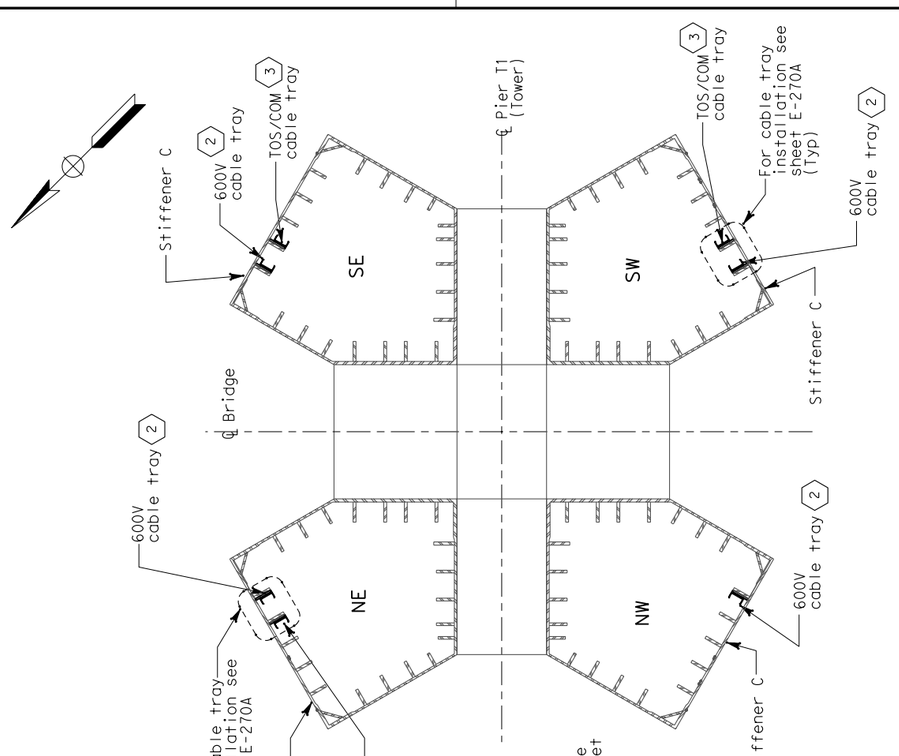

SHEET NOTE:

(1) For cable tray tag numbers see sheet E-270B.
(2) 600V cable trays shall be installed along C1 stiffeners.
(3) TOS/COM cable trays shall be installed along C2 stiffeners.
(4) All cable tray installed in the tower shall be ladder type with cover.

NOTE:

1. Reference:

   For conduit and cable tray schedule see sheets starting at E-401.

ELEVATION VIEW
1:250

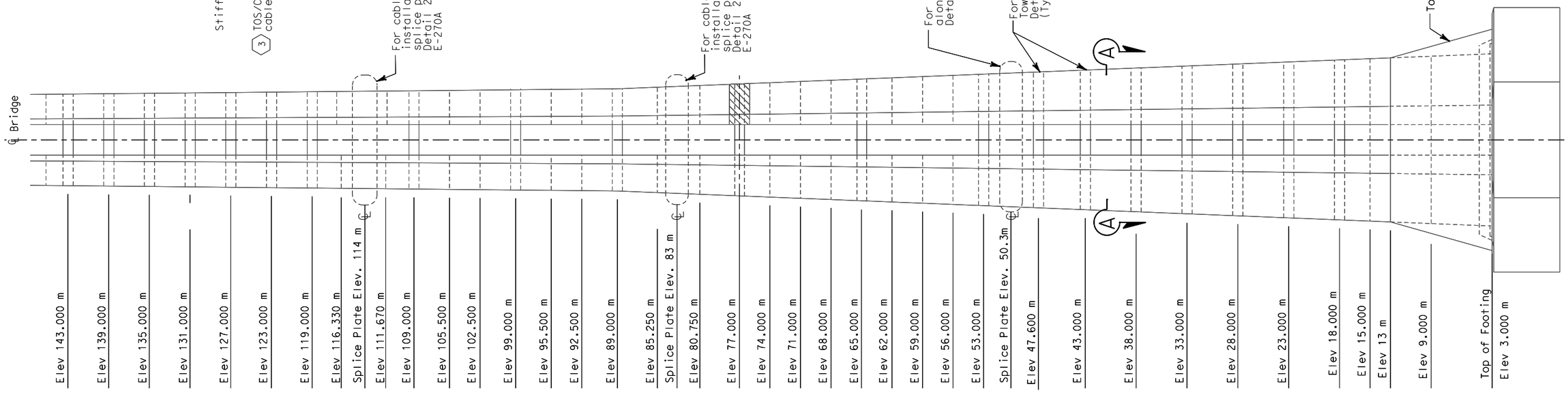

DETAILS
TOWER AND SUSPENSION CABLE CABLE TRAY LOCATION
SCALE AS NOTED

E-270C

ALL DIMENSIONS ARE IN MILLIMETERS UNLESS OTHERWISE SHOWN.

FOR REDUCED PLANS ORIGINAL SCALE IS IN MILLIMETERS 0 20 40 60 80

DGN FILE =>T:\13103\MS\pse\SAS Struc\CCO\SAS CCO42\04-0120f1_0275S03.dgn
USERNAME =>llorico

CU 04251

EA 0120F1

LAST REVISION 00-00-00 — DATE PLOTTED => 3/17/2008 TIME PLOTTED => 5:16:27 PM

REGISTERED PROFESSIONAL ENGINEER
MAXWELL FUMIO TAKATA
No. E 8651
Exp. 9/30/2008
ELECTRICAL
STATE OF CALIFORNIA

FOR REVISION ONLY

DIST	COUNTY	ROUTE	KILOMETER POST TOTAL PROJECT	SHEET No	TOTAL SHEETS
04	SF	80	13.2/13.9	276R1	1204

12/19/02
REGISTERED ELECTRICAL ENGINEER DATE

REGISTERED PROFESSIONAL ENGINEER
JENS ERLINGSSON
No. 8249
Exp. 9/30/06
ELECTRICAL
STATE OF CALIFORNIA

12-6-04
PLANS APPROVAL DATE

PB POWER, Inc.
A Parsons Brinckerhoff Company
303 Second St., Suite 700N
San Francisco, CA 94107-1317

The State of California or its officers or agents shall not be responsible for the accuracy or completeness of electronic copies of this plan sheet.

Caltrans now has a web site! To get to the web site, go to http://www.dot.ca.gov

REQUEST FOR INFORMATION NOT ADDRESSED IN THIS CCO REMAIN IN FORCE					
1	02/19/08	ELECTRICAL MODIFICATIONS	MP EL	RR	42
MARK	DATE	DESCRIPTIONS	BY	CH'D	CCO#
REVISIONS					

CONTRACT CHANGE ORDER NO._____
SHEET _____ OF _____

MAIN CABLE ROADWAY AND DOWNLIGHT LIGHTING SCHEDULE

Circuit Number	Station	Location: Roadway side	Location: Suspend at Panel Point	Mounting	Ltg. Fixture Type	Number/ Wattage	Remarks
S-3021	56+78	-	PP-22	Main Cable	MSR-2B-C	2-400 W	with Remote Ballast
S-3021				Main Cable	MSR-2A-C	1-400 W	with Remote Ballast
S-3021	57+18	-	PP-30	Main Cable	MSR-2B-C	2-400 W	with Remote Ballast
S-3021				Main Cable	MSR-2A-C	1-400 W	with Remote Ballast
S-3021	57+58	-	PP-38	Main Cable	MSR-2-C	3-400 W	with Remote Ballast
S-3022	57+98	-	PP-46	Main Cable	MSR-2-C	3-400 W	with Remote Ballast
S-3022	58+38	-	PP-54	Main Cable	MSR-2-C	3-400 W	with Remote Ballast
S-3022	58+78	-	PP-62	Main Cable	MSR-2-C	3-400 W	with Remote Ballast
S-3023	59+18	-	PP-70	Main Cable	MSR-2-C	3-400 W	with Remote Ballast
S-3023	59+58	-	PP-78	Main Cable	MSR-2B-C	3-400 W	with Remote Ballast
A-3011	56+18	-	PP-10	Main Cable	MAD-4-C	1-175 W	with Remote Ballast
A-3011	56+28	-	PP-12	Main Cable	MAD-4-C	1-175 W	with Remote Ballast
A-3011	56+38	-	PP-14	Main Cable	MAD-4-C	1-175 W	with Remote Ballast
A-3011	56+48	-	PP-16	Main Cable	MAD-3-C	1-250 W	with Remote Ballast
A-3011	56+58	-	PP-18	Main Cable	MAD-3-C	1-250 W	with Remote Ballast
A-3011	56+68	-	PP-20	Main Cable	MAD-3-C	1-250 W	with Remote Ballast
A-3011	56+78	-	PP-22	Main Cable	MAD-3-C	1-250 W	with Remote Ballast
A-3011	56+88	-	PP-24	Main Cable	MAD-2-C	1-400 W	with Remote Ballast
A-3011	56+98	-	PP-26	Main Cable	MAD-2-C	1-400 W	with Remote Ballast
A-3011	57+08	-	PP-28	Main Cable	MAD-2-C	1-400 W	with Remote Ballast
A-3011	57+18	-	PP-30	Main Cable	MAD-2-C	1-400 W	with Remote Ballast
A-3011	57+28	-	PP-32	Main Cable	MAD-2-C	1-400 W	with Remote Ballast
A-3011	57+38	-	PP-34	Main Cable	MAD-2-C	1-400 W	with Remote Ballast
A-3011	57+48	-	PP-36	Main Cable	MAD-2-C	1-400 W	with Remote Ballast
A-3011	57+58	-	PP-38	Main Cable	MAD-2-C	1-400 W	with Remote Ballast
A-3011	57+68	-	PP-40	Main Cable	MAD-2-C	1-400 W	with Remote Ballast
A-3012	57+88	-	PP-44	Main Cable	MAD-2-C	1-400 W	with Remote Ballast
A-3012	57+98	-	PP-46	Main Cable	MAD-2-C	1-400 W	with Remote Ballast
A-3012	58+08	-	PP-48	Main Cable	MAD-2-C	1-400 W	with Remote Ballast
A-3012	58+18	-	PP-50	Main Cable	MAD-2-C	1-400 W	with Remote Ballast
A-3012	58+28	-	PP-52	Main Cable	MAD-2-C	1-400 W	with Remote Ballast
A-3012	58+38	-	PP-54	Main Cable	MAD-2-C	1-400 W	with Remote Ballast
A-3012	58+48	-	PP-56	Main Cable	MAD-2-C	1-400 W	with Remote Ballast
A-3012	58+58	-	PP-58	Main Cable	MAD-2-C	1-400 W	with Remote Ballast
A-3012	58+68	-	PP-60	Main Cable	MAD-2-C	1-400 W	with Remote Ballast
A-3013	58+78	-	PP-62	Main Cable	MAD-2-C	1-400 W	with Remote Ballast
A-3013	58+88	-	PP-64	Main Cable	MAD-2-C	1-400 W	with Remote Ballast
A-3013	58+98	-	PP-66	Main Cable	MAD-2-C	1-400 W	with Remote Ballast
A-3013	59+08	-	PP-68	Main Cable	MAD-3-C	1-250 W	with Remote Ballast
A-3013	59+18	-	PP-70	Main Cable	MAD-3-C	1-250 W	with Remote Ballast
A-3013	59+28	-	PP-72	Main Cable	MAD-3-C	1-250 W	with Remote Ballast
A-3013	59+38	-	PP-74	Main Cable	MAD-3-C	1-250 W	with Remote Ballast
A-3013	59+48	-	PP-76	Main Cable	MAD-3-C	1-250 W	with Remote Ballast
A-3013	59+58	-	PP-78	Main Cable	MAD-3-C	1-250 W	with Remote Ballast
A-3013	59+68	-	PP-80	Main Cable	MAD-3-C	1-250 W	with Remote Ballast
A-3013	59+78	-	PP-82	Main Cable	MAD-3-C	1-250 W	with Remote Ballast
A-3013	59+88	-	PP-84	Main Cable	MAD-4-C	1-175 W	with Remote Ballast
A-3013	59+98	-	PP-86	Main Cable	MAD-4-C	1-175 W	with Remote Ballast
A-3013	60+08	-	PP-88	Main Cable	MAD-4-C	1-175 W	with Remote Ballast
A-3013	60+18	-	PP-90	Main Cable	MAD-4-C	1-175 W	with Remote Ballast
A-3013	60+28	-	PP-92	Main Cable	MAD-4-C	1-175 W	with Remote Ballast
A-3013	60+38	-	PP-94	Main Cable	MAD-4-C	1-175 W	with Remote Ballast

SUSPENDER UPLIGHT LIGHTING SCHEDULE

Circuit Number	Station (1)	Location: Roadway side	Location: Suspend at Panel Point	Mounting (1)	Ltg. Fixture Type	Number/ Wattage	Remarks
A-3001	56+16	North	Near PP-9	Bridge Deck	MAU-5-D	1-100 W	with Remote Ballast
A-3001	56+22	North	Near PP-11	Bridge Deck	MAU-5-D	1-100 W	with Remote Ballast
A-3001	56+28	North	PP-12	Suspender Base	MAU-4-D	2-175 W	with Remote Ballast
A-3001	56+38	North	PP-14	Suspender Base	MAU-4-D	2-175 W	with Remote Ballast
A-3001	56+48	North	PP-16	Suspender Base	MAU-3-D	2-250 W	with Remote Ballast
A-3001	56+58	North	PP-18	Suspender Base	MAU-3-D	2-250 W	with Remote Ballast
A-3001	56+68	North	PP-20	Suspender Base	MAU-3-D	2-250 W	with Remote Ballast
A-3001	56+78	North	PP-22	Suspender Base	MAU-3-D	2-250 W	with Remote Ballast
A-3001	56+88	North	PP-24	Suspender Base	MAU-2-D	2-400 W	with Remote Ballast
A-3002	56+98	North	PP-26	Suspender Base	MAU-2-D	2-400 W	with Remote Ballast
A-3002	57+08	North	PP-28	Suspender Base	MAU-2-D	2-400 W	with Remote Ballast
A-3002	57+18	North	PP-30	Suspender Base	MAU-2-D	2-400 W	with Remote Ballast
A-3002	57+28	North	PP-32	Suspender Base	MAU-2-D	2-400 W	with Remote Ballast
A-3002	57+38	North	PP-34	Suspender Base	MAU-2-D	2-400 W	with Remote Ballast
A-3002	57+48	North	PP-36	Suspender Base	MAU-2-D	2-400 W	with Remote Ballast
A-3003	57+58	North	PP-38	Suspender Base	MAU-2-D	2-400 W	with Remote Ballast
A-3003	57+68	North	PP-40	Suspender Base	MAU-2-D	2-400 W	with Remote Ballast
A-3003	57+78	North	PP-42	Suspender Base	MAU-2-D	2-400 W	with Remote Ballast
A-3003	57+88	North	PP-44	Suspender Base	MAU-2-D	2-400 W	with Remote Ballast
A-3003	57+98	North	PP-46	Suspender Base	MAU-2-D	2-400 W	with Remote Ballast
A-3003	58+08	North	PP-48	Suspender Base	MAU-2-D	2-400 W	with Remote Ballast
A-3004	58+18	North	PP-50	Suspender Base	MAU-2-D	2-400 W	with Remote Ballast
A-3004	58+28	North	PP-52	Suspender Base	MAU-2-D	2-400 W	with Remote Ballast
A-3004	58+38	North	PP-54	Suspender Base	MAU-2-D	2-400 W	with Remote Ballast
A-3004	58+48	North	PP-56	Suspender Base	MAU-2-D	2-400 W	with Remote Ballast
A-3004	58+58	North	PP-58	Suspender Base	MAU-2-D	2-400 W	with Remote Ballast
A-3004	58+68	North	PP-60	Suspender Base	MAU-2-D	2-400 W	with Remote Ballast
A-3005	58+78	North	PP-62	Suspender Base	MAU-2-D	2-400 W	with Remote Ballast
A-3005	58+88	North	PP-64	Suspender Base	MAU-3-D	2-250 W	with Remote Ballast
A-3005	58+98	North	PP-66	Suspender Base	MAU-3-D	2-250 W	with Remote Ballast
A-3005	59+08	North	PP-68	Suspender Base	MAU-3-D	2-250 W	with Remote Ballast
A-3005	59+18	North	PP-70	Suspender Base	MAU-3-D	2-250 W	with Remote Ballast
A-3005	59+28	North	PP-72	Suspender Base	MAU-3-D	2-250 W	with Remote Ballast
A-3006	59+38	North	PP-74	Suspender Base	MAU-3-D	2-250 W	with Remote Ballast
A-3006	59+48	North	PP-76	Suspender Base	MAU-3-D	2-250 W	with Remote Ballast
A-3006	59+58	North	PP-78	Suspender Base	MAU-3-D	2-250 W	with Remote Ballast
A-3006	59+68	North	PP-80	Suspender Base	MAU-4-D	2-175 W	with Remote Ballast
A-3006	59+78	North	PP-82	Suspender Base	MAU-4-D	2-175 W	with Remote Ballast
A-3006	59+88	North	PP-84	Suspender Base	MAU-4-D	2-175 W	with Remote Ballast
A-3006	59+98	North	PP-86	Suspender Base	MAU-4-D	2-175 W	with Remote Ballast
A-3006	60+08	North	PP-88	Suspender Base	MAU-4-D	2-175 W	with Remote Ballast
A-3006	60+18	North	West PP-90	Suspender Base	MAU-4-D	1-175 W	with Remote Ballast
A-3006	60+23	North	Near PP-91	Bridge Deck	MAU-5-D	1-100 W	with Remote Ballast
A-3006	60+33	North	PP-93	Bridge Deck	MAU-5-D	1-100 W	with Remote Ballast

(1) (1)

NOTES:

1. For Roadway and Suspender lightning wiring diagrams see sheets E-236 to E-240.

SAS SUPERSTRUCTURE - WB

DETAILS
TOWER AND SUSPENSION CABLE LIGHTING SCHEDULES

NO SCALE

E-271

STATE OF CALIFORNIA - DEPARTMENT OF TRANSPORTATION
Caltrans

DESIGN OVERSIGHT
BEHZAD GOLEMOHAMMADI

CALCULATED/ DESIGNED BY
CHECKED BY

REVISED BY	DATE REVISED
JP	11/01
EDC	09/01

FOR REDUCED PLANS ORIGINAL SCALE IS IN MILLIMETERS 0 20 40 60 80

DGN FILE =>T:\13103\MS\pse\SAS Struc\CCO\SAS CC042\04-0120f1_0276R01.dgn
USERNAME =>llorico

CU 04251

EA 0120F1

LAST REVISION 00-00-00
DATE PLOTTED => 3/17/2008
TIME PLOTTED => 5:25:18 PM

REVISED BY	DATE REVISED
JP	8/01 11/01
CALCULATED/ DESIGNED BY	EDC
CHECKED BY	

DESIGN OVERSIGHT
BEHZAD GOLEMOHAMMADI

STATE OF CALIFORNIA - DEPARTMENT OF TRANSPORTATION
Caltrans

REQUEST FOR INFORMATION NOT ADDRESSED IN THIS CCO REMAIN IN FORCE					
1	02/19/08	ELECTRICAL MODIFICATIONS	MP EL	RR	42
MARK	DATE	DESCRIPTIONS	BY	CH'D	CCO#
		REVISIONS			

CONTRACT CHANGE ORDER NO._____
SHEET _____ OF _____

Caltrans Metric

DIST	COUNTY	ROUTE	KILOMETER POST TOTAL PROJECT	SHEET No	TOTAL SHEETS
04	SF	80	13.2/13.9	277R1	1204

Jens Erlingsson 12/19/02
REGISTERED ELECTRICAL ENGINEER DATE

REGISTERED PROFESSIONAL ENGINEER
JENS ERLINGSSON
No. 8249
Exp. 9/30/06
ELECTRICAL
STATE OF CALIFORNIA

12-6-04
PLANS APPROVAL DATE

PB POWER, Inc.
A Parsons Brinckerhoff Company
303 Second St., Suite 700N
San Francisco, CA 94107-1317

The State of California or its officers or agents shall not be responsible for the accuracy or completeness of electronic copies of this plan sheet.

Caltrans now has a web site! To get to the web site, go to http://www.dot.ca.gov

MAIN CABLE ROADWAY AND DOWNLIGHT LIGHTING SCHEDULE

Circuit Number	Station	Location: Roadway side	Location: Suspend at Panel Point	Mounting	Ltg. Fixture Type	Number/ Wattage	Remarks
S-3051	56+69		PP-22	Main Cable	MSR-2B-C	2-400 W	with Remote Ballast
S-3051					MSR-2A-C	1-400 W	with Remote Ballast
S-3051	57+09		PP-30	Main Cable	MSR-2B-C	2-400 W	with Remote Ballast
S-3051					MSR-2A-C	1-400 W	with Remote Ballast
S-3051	57+49		PP-38	Main Cable	MSR-2-C	3-400 W	with Remote Ballast
S-3052	57+89		PP-46	Main Cable	MSR-2-C	3-400 W	with Remote Ballast
S-3052	58+29		PP-54	Main Cable	MSR-2-C	3-400 W	with Remote Ballast
S-3052	58+69		PP-62	Main Cable	MSR-2-C	3-400 W	with Remote Ballast
S-3053	59+09		PP-70	Main Cable	MSR-2-C	3-400 W	with Remote Ballast
S-3053	59+49		PP-78	Main Cable	MSR-2B-C	2-400 W	with Remote Ballast
S-3053					MSR-2-C	1-400 W	with Remote Ballast
S-3053	59+59		PP-80	Main Cable	MSR-2B-C	2-400 W	with Remote Ballast
A-3041	56+09		PP-10	Main Cable	MAD-4-C	1-175 W	with Remote Ballast
A-3041	56+19		PP-12	Main Cable	MAD-4-C	1-175 W	with Remote Ballast
A-3041	56+29		PP-14	Main Cable	MAD-4-C	1-175 W	with Remote Ballast
A-3041	56+39		PP-16	Main Cable	MAD-3-C	1-250 W	with Remote Ballast
A-3041	56+49		PP-18	Main Cable	MAD-3-C	1-250 W	with Remote Ballast
A-3041	56+59		PP-20	Main Cable	MAD-3-C	1-250 W	with Remote Ballast
A-3041	56+69		PP-22	Main Cable	MAD-3-C	1-250 W	with Remote Ballast
A-3041	56+79		PP-24	Main Cable	MAD-2-C	1-400 W	with Remote Ballast
A-3041	56+89		PP-26	Main Cable	MAD-2-C	1-400 W	with Remote Ballast
A-3041	56+99		PP-28	Main Cable	MAD-2-C	1-400 W	with Remote Ballast
A-3041	57+09		PP-30	Main Cable	MAD-2-C	1-400 W	with Remote Ballast
A-3041	57+19		PP-32	Main Cable	MAD-2-C	1-400 W	with Remote Ballast
A-3041	57+29		PP-34	Main Cable	MAD-2-C	1-400 W	with Remote Ballast
A-3041	57+39		PP-36	Main Cable	MAD-2-C	1-400 W	with Remote Ballast
A-3041	57+49		PP-38	Main Cable	MAD-2-C	1-400 W	with Remote Ballast
A-3041	57+59		PP-40	Main Cable	MAD-2-C	1-400 W	with Remote Ballast
A-3042	57+79		PP-44	Main Cable	MAD-2-C	1-400 W	with Remote Ballast
A-3042	57+89		PP-46	Main Cable	MAD-2-C	1-400 W	with Remote Ballast
A-3042	57+99		PP-48	Main Cable	MAD-2-C	1-400 W	with Remote Ballast
A-3042	58+09		PP-50	Main Cable	MAD-2-C	1-400 W	with Remote Ballast
A-3042	58+19		PP-52	Main Cable	MAD-2-C	1-400 W	with Remote Ballast
A-3042	58+29		PP-54	Main Cable	MAD-2-C	1-400 W	with Remote Ballast
A-3042	58+39		PP-56	Main Cable	MAD-2-C	1-400 W	with Remote Ballast
A-3042	58+49		PP-58	Main Cable	MAD-2-C	1-400 W	with Remote Ballast
A-3042	58+59		PP-60	Main Cable	MAD-2-C	1-400 W	with Remote Ballast
A-3043	58+69		PP-62	Main Cable	MAD-2-C	1-400 W	with Remote Ballast
A-3043	58+79		PP-64	Main Cable	MAD-2-C	1-400 W	with Remote Ballast
A-3043	58+89		PP-66	Main Cable	MAD-2-C	1-400 W	with Remote Ballast
A-3043	58+99		PP-68	Main Cable	MAD-3-C	1-250 W	with Remote Ballast
A-3043	59+09		PP-70	Main Cable	MAD-3-C	1-250 W	with Remote Ballast
A-3043	59+19		PP-72	Main Cable	MAD-3-C	1-250 W	with Remote Ballast
A-3043	59+29		PP-74	Main Cable	MAD-3-C	1-250 W	with Remote Ballast
A-3043	59+39		PP-76	Main Cable	MAD-3-C	1-250 W	with Remote Ballast
A-3043	59+49		PP-78	Main Cable	MAD-3-C	1-250 W	with Remote Ballast
A-3043	59+59		PP-80	Main Cable	MAD-3-C	1-250 W	with Remote Ballast
A-3043	59+69		PP-82	Main Cable	MAD-3-C	1-250 W	with Remote Ballast
A-3043	59+79		PP-84	Main Cable	MAD-4-C	1-175 W	with Remote Ballast
A-3043	59+89		PP-86	Main Cable	MAD-4-C	1-175 W	with Remote Ballast
A-3043	59+99		PP-88	Main Cable	MAD-4-C	1-175 W	with Remote Ballast
A-3043	60+09		PP-90	Main Cable	MAD-4-C	1-175 W	with Remote Ballast
A-3043	60+19		PP-92	Main Cable	MAD-4-C	1-175 W	with Remote Ballast
A-3043	60+29		PP-94	Main Cable	MAD-4-C	1-175 W	with Remote Ballast

SUSPENDER UPLIGHT LIGHTING SCHEDULE

Circuit Number	Station (1)	Location: Roadway side (1)	Location: Suspend at Panel Point	Mounting	Ltg. Fixture Type	Number/ Wattage	Remarks
A-3031	56+07	South	Near PP-9	Bridge Deck	MAU-5-D	1-100 W	with Remote Ballast
A-3031	56+13	South	Near PP-11	Bridge Deck	MAU-5-D	1-100 W	with Remote Ballast
A-3031	56+19	South	PP-12	Suspender base	MAU-4-D	2-175 W	with Remote Ballast
A-3031	56+29	South	PP-14	Suspender base	MAU-4-D	2-175 W	with Remote Ballast
A-3031	56+39	South	PP-16	Suspender base	MAU-3-D	2-250 W	with Remote Ballast
A-3031	56+49	South	PP-18	Suspender base	MAU-3-D	2-250 W	with Remote Ballast
A-3031	56+59	South	PP-20	Suspender base	MAU-3-D	2-250 W	with Remote Ballast
A-3031	56+69	South	PP-22	Suspender base	MAU-3-D	2-250 W	with Remote Ballast
A-3031	56+79	South	PP-24	Suspender base	MAU-2-D	2-400 W	with Remote Ballast
A-3032	56+89	South	PP-26	Suspender base	MAU-2-D	2-400 W	with Remote Ballast
A-3032	56+99	South	PP-28	Suspender base	MAU-2-D	2-400 W	with Remote Ballast
A-3032	57+09	South	PP-30	Suspender base	MAU-2-D	2-400 W	with Remote Ballast
A-3032	57+19	South	PP-32	Suspender base	MAU-2-D	2-400 W	with Remote Ballast
A-3032	57+29	South	PP-34	Suspender base	MAU-2-D	2-400 W	with Remote Ballast
A-3032	57+39	South	PP-36	Suspender base	MAU-2-D	2-400 W	with Remote Ballast
A-3033	57+49	South	PP-38	Suspender base	MAU-2-D	2-400 W	with Remote Ballast
A-3033	57+59	South	PP-40	Suspender base	MAU-2-D	2-400 W	with Remote Ballast
A-3033	57+69	South	PP-42	Suspender base	MAU-2-D	2-400 W	with Remote Ballast
A-3033	57+79	South	PP-44	Suspender base	MAU-2-D	2-400 W	with Remote Ballast
A-3033	57+89	South	PP-46	Suspender base	MAU-2-D	2-400 W	with Remote Ballast
A-3033	57+99	South	PP-48	Suspender base	MAU-2-D	2-400 W	with Remote Ballast
A-3034	58+09	South	PP-50	Suspender base	MAU-2-D	2-400 W	with Remote Ballast
A-3034	58+19	South	PP-52	Suspender base	MAU-2-D	2-400 W	with Remote Ballast
A-3034	58+29	South	PP-54	Suspender base	MAU-2-D	2-400 W	with Remote Ballast
A-3034	58+39	South	PP-56	Suspender base	MAU-2-D	2-400 W	with Remote Ballast
A-3034	58+49	South	PP-58	Suspender base	MAU-2-D	2-400 W	with Remote Ballast
A-3034	58+59	South	PP-60	Suspender base	MAU-2-D	2-400 W	with Remote Ballast
A-3035	58+69	South	PP-62	Suspender base	MAU-2-D	2-400 W	with Remote Ballast
A-3035	58+79	South	PP-64	Suspender base	MAU-3-D	2-250 W	with Remote Ballast
A-3035	58+89	South	PP-66	Suspender base	MAU-3-D	2-250 W	with Remote Ballast
A-3035	58+99	South	PP-68	Suspender base	MAU-3-D	2-250 W	with Remote Ballast
A-3035	59+09	South	PP-70	Suspender base	MAU-3-D	2-250 W	with Remote Ballast
A-3035	59+19	South	PP-72	Suspender base	MAU-3-D	2-250 W	with Remote Ballast
A-3036	59+29	South	PP-74	Suspender base	MAU-3-D	2-250 W	with Remote Ballast
A-3036	59+39	South	PP-76	Suspender base	MAU-3-D	2-250 W	with Remote Ballast
A-3036	59+49	South	PP-78	Suspender base	MAU-3-D	2-250 W	with Remote Ballast
A-3036	59+59	South	PP-80	Suspender base	MAU-4-D	2-175 W	with Remote Ballast
A-3036	59+69	South	PP-82	Suspender base	MAU-4-D	2-175 W	with Remote Ballast
A-3036	59+79	South	PP-84	Suspender base	MAU-4-D	2-175 W	with Remote Ballast
A-3036	59+89	South	PP-86	Suspender base	MAU-4-D	2-175 W	with Remote Ballast
A-3036	59+99	South	PP-88	Suspender base	MAU-4-D	2-175 W	with Remote Ballast
A-3036	60+09	South	West PP-90	Suspender base	1 MAU-4-D	1 1-175 W	with Remote Ballast
A-3036	60+15	South	Near PP-91	Bridge Deck	1 MAU-5-D	1 1-100 W	with Remote Ballast
A-3036	60+25	South	PP-93	Bridge Deck	MAU-5-D	1-100 W	with Remote Ballast

NOTES:

1. For Roadway and Suspender lightning wiring diagrams see sheets EE-243 to EE-247.

SAS SUPERSTRUCTURE - EB

REGISTERED PROFESSIONAL ENGINEER
MAXWELL FUMIO TAKATA
No. E 8651
Exp. 9/30/2008
ELECTRICAL
STATE OF CALIFORNIA

FOR REVISION ONLY

DETAILS
TOWER AND SUSPENSION CABLE LIGHTING SCHEDULES

NO SCALE

E-272

LAST REVISION 00-00-00
DATE PLOTTED => 3/17/2008
TIME PLOTTED => 5:26:00 PM

FOR REDUCED PLANS ORIGINAL SCALE IS IN MILLIMETERS 0 20 40 60 80

DGN FILE =>T:\13103\MS\pse\SAS Struc\CCO\SAS CC042\04-0120f1_0277R01.dgn
USERNAME =>llorico

CU 04251

EA 0120F1

REQUEST FOR INFORMATION NOT ADDRESSED IN THIS CCO REMAIN IN FORCE

MARK	DATE	DESCRIPTIONS	BY	CH'D	CCO#
		REVISIONS			
1	02/19/08	ELECTRICAL MODIFICATIONS	MP EL	RR	42

CONTRACT CHANGE ORDER NO. _____
SHEET _____ OF _____

REGISTERED PROFESSIONAL ENGINEER
SEAN COUGHLIN
No. 12227
Exp. 9/30/08
ELECTRICAL
STATE OF CALIFORNIA

REGISTERED ELECTRICAL ENGINEER

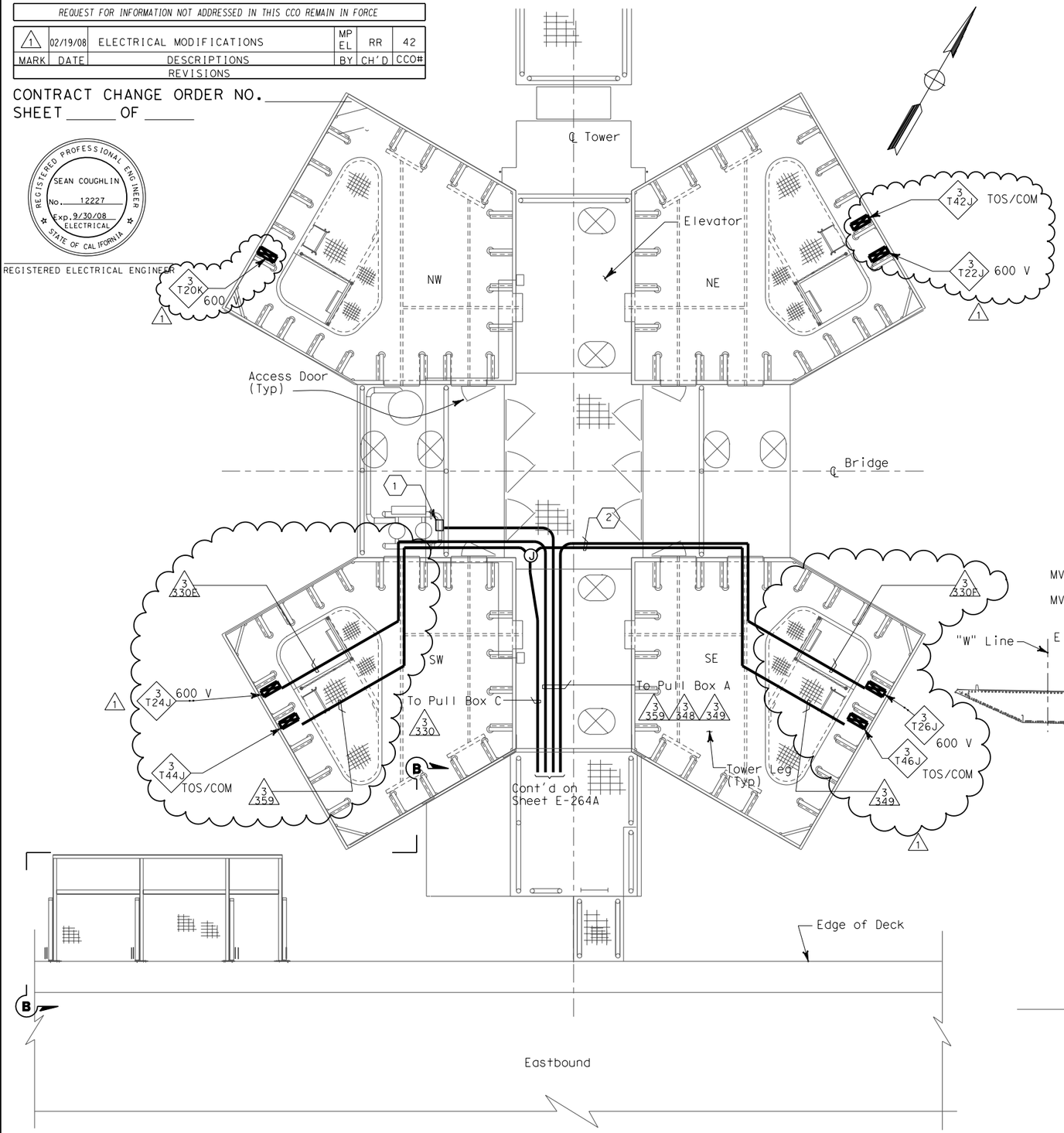

PLAN AT ACCESS PLATFORM AT ELEV 53.05 m

NOT TO SCALE

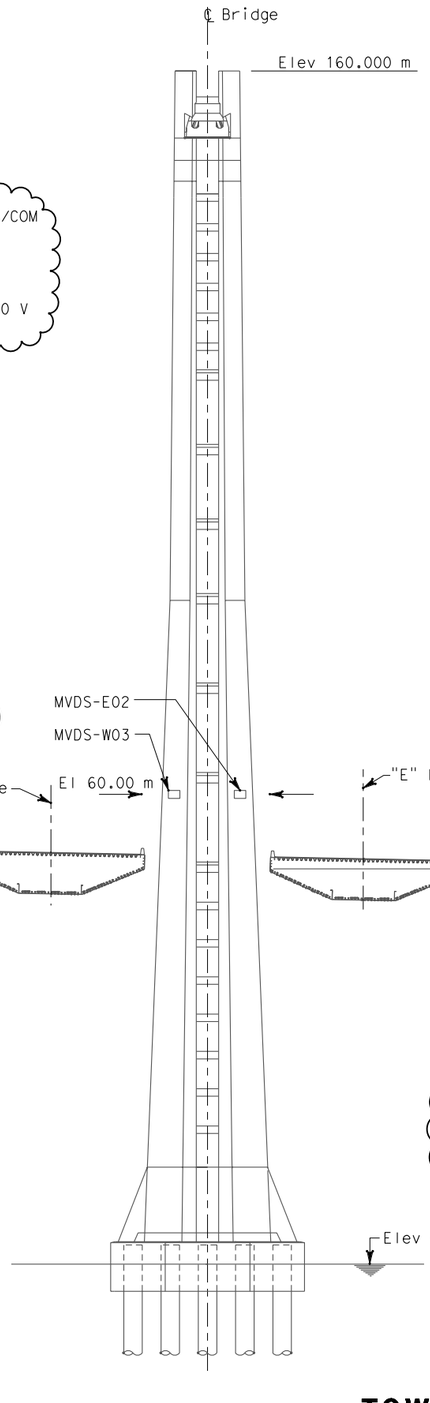

ELEVATION

NO SCALE

Caltrans Metric

DIST	COUNTY	ROUTE	KILOMETER POST TOTAL PROJECT	SHEET No	TOTAL SHEETS
04	SF	80	13.2/13.9	284R1	1204

REGISTERED CIVIL ENGINEER — 12/19/02 DATE

12-6-04
PLANS APPROVAL DATE

REGISTERED PROFESSIONAL ENGINEER
Michael Dahlin
No. 47186
Exp. 12/31/05
CIVIL
STATE OF CALIFORNIA

PB POWER, Inc.
A Parsons Brinckerhoff Company
303 Second St., Suite 700N
San Francisco, CA 94107-1317

The State of California or its officers or agents shall not be responsible for the accuracy or completeness of electronic copies of this plan sheet.

Caltrans now has a web site! To get to the web site, go to http://www.dot.ca.gov

SHEET NOTES:

(1) For conduit routing to MVDS units. See elevation on this sheet and sheet E-345.

(2) All conduits which thereafter cross the access walkways shall be raised to a level of at least 2438 above the grating to pass overhead, allowing free walkways on the remaining three quadrants of the platform. Door on north face of SE tower shaft shall remain accessible.

NOTES:

1. References:
   - For conduit and cable tray schedules, see sheets starting at E-401.
   - For vertical conduit runs support system, see sheet E-287.
2. For Section B-B, see sheet E-264A.

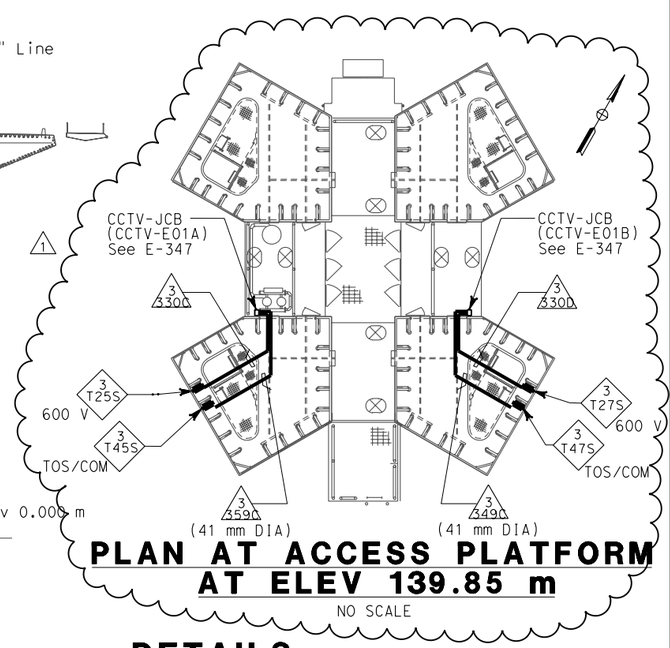

PLAN AT ACCESS PLATFORM AT ELEV 139.85 m

NO SCALE

DETAILS
TOWER AND SUSPENSION CABLE TRAFFIC OPERATIONS SYSTEM CONDUIT

NO SCALE

E-281

ALL DIMENSIONS IN MILLIMETERS UNLESS OTHERWISE SHOWN

FOR REDUCED PLANS ORIGINAL SCALE IS IN MILLIMETERS 0 20 40 60 80

DGN FILE =>T:\13103\MS\pse\SAS Struc\CCO\SAS CCO42\04-0120f1_0284R01.dgn
USERNAME =>llorico

CU 04251

EA 0120F1

DESIGN OVERSIGHT — BEHZAD GOLEMOHAMMADI

STATE OF CALIFORNIA - DEPARTMENT OF TRANSPORTATION — Caltrans

CALCULATED/ DESIGNED BY	MD	DATE 11/01	REVISED BY
CHECKED BY	PBF	12/01	DATE REVISED

LAST REVISION 00-00-00

DATE PLOTTED => 3/17/2008
TIME PLOTTED => 5:27:22 PM

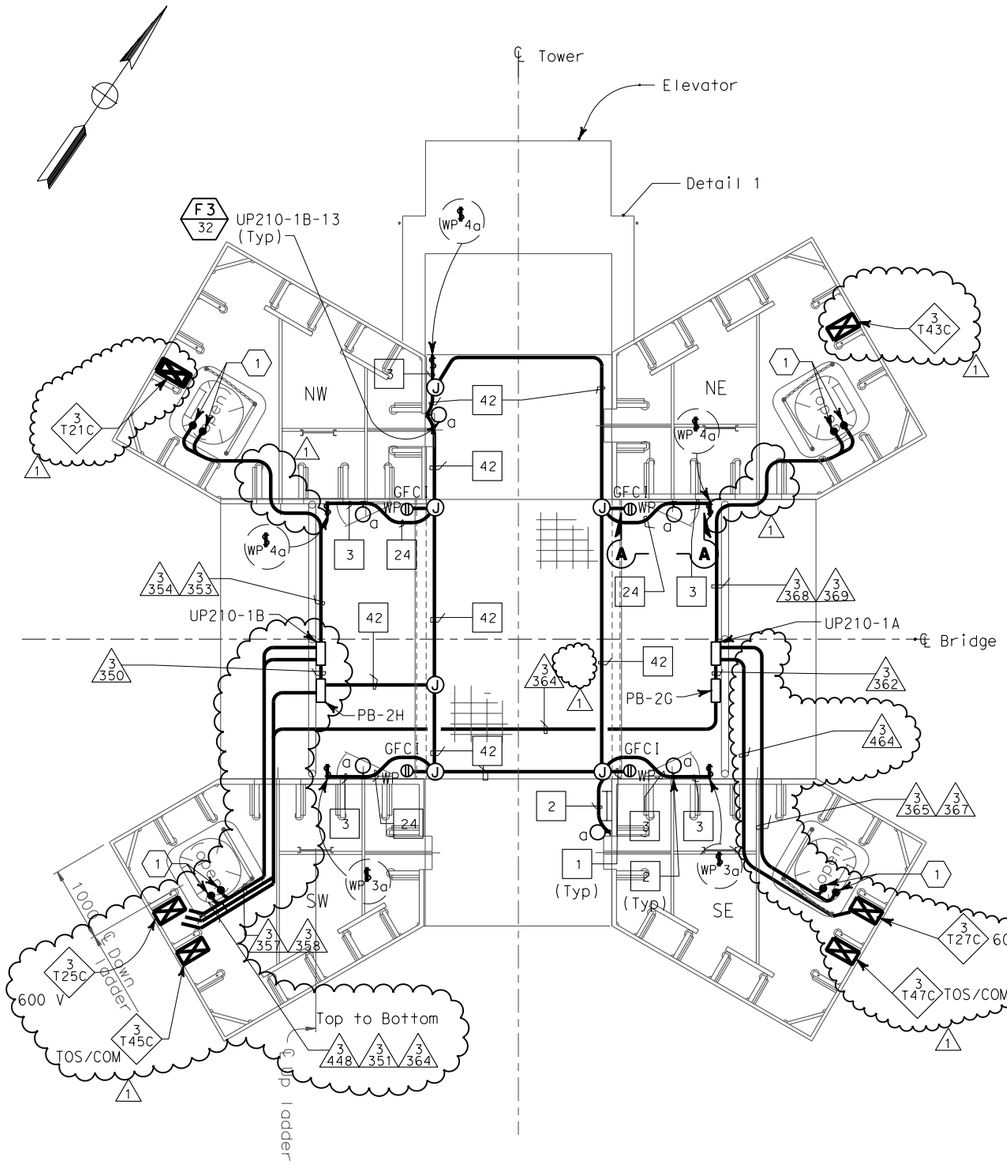

PLAN AT ELEVATION 89.85 m

SCALE: 1:40

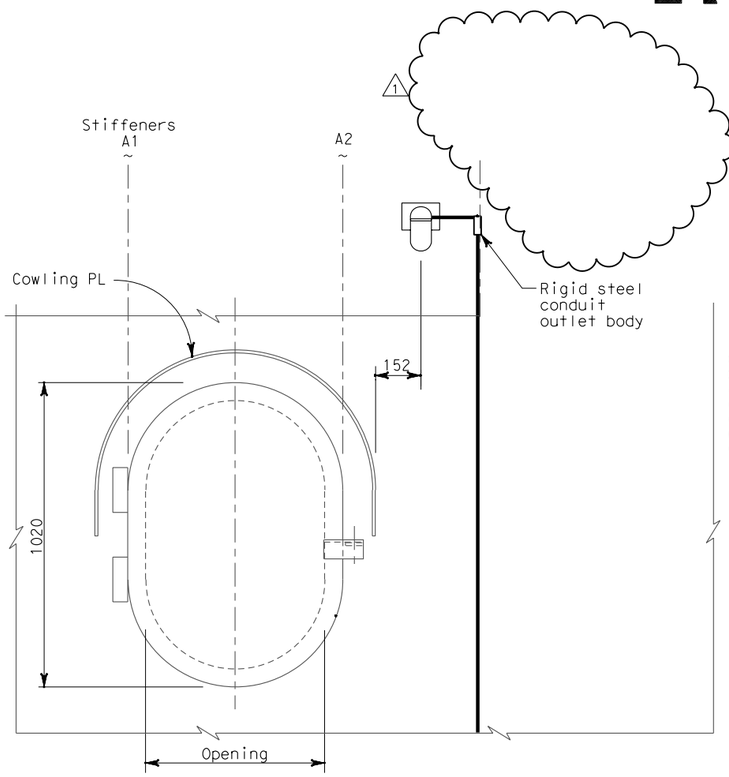

SECTION A-A
ACCESS OPENING DOOR

NO SCALE

SHEET NOTES:

(1) For tower shaft ladder and platform lighting and power layout, see section B-B on sheet E-284.

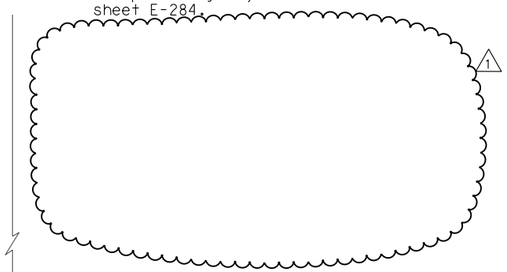

NOTES:

1. References:
   - For typical conduit installation details, see sheet E-268.
   - For utility panel UP-210-1A and UP-210-1B panel schedules, see sheets E-279 and E-280.
   - For types of pull boxes, splice boxes and enclosures, see sheets E-83 and E-169.
   - For conduit and cable tray schedules, see sheets starting at E-401.
   - For lighting installation details, see sheet E-267.
   - For lighting fixture schedule, see sheet E-273.
   - For vertical conduit runs supports system, see sheet E-287.
2. All conduits and fittings routed exposed at grating shall be rigid galvanized steel, PVC coated.
3. Fixture mounting height elevation shall be 2.125 m above floor/platform elevation UNO.
4. Electrical conduits shall enter the tower shafts between stiffeners A3 and A4 only. For conduit entry details, see Structural Utility drawings.
5. For other related work not shown on this sheet, see Electrical Special Provisions.

DIST	COUNTY	ROUTE	KILOMETER POST TOTAL PROJECT	SHEET No	TOTAL SHEETS
04	SF	80	13.2/13.9	288R1	1204

Jens Erlingsson 12/19/02
REGISTERED ELECTRICAL ENGINEER DATE

12-6-04
PLANS APPROVAL DATE

REGISTERED PROFESSIONAL ENGINEER — JENS ERLINGSSON No. 8249 Exp. 9/30/06 ELECTRICAL — STATE OF CALIFORNIA

PB POWER, Inc.
A Parsons Brinckerhoff Company
303 Second St., Suite 700N
San Francisco, CA 94107-1317

The State of California or its officers or agents shall not be responsible for the accuracy or completeness of electronic copies of this plan sheet.

Caltrans now has a web site! To get to the web site, go to http://www.dot.ca.gov

REGISTERED PROFESSIONAL ENGINEER — MARNELL FUMIO TAKAKI No. E 8651 Exp. 9/30/2008 ELECTRICAL — STATE OF CALIFORNIA

FOR REVISION ONLY

REQUEST FOR INFORMATION NOT ADDRESSED IN THIS CCO REMAIN IN FORCE

MARK	DATE	REVISIONS DESCRIPTIONS	MP EL BY	CH'D	CCO#
1	02/19/08	ELECTRICAL MODIFICATIONS	MP EL	RR	42

CONTRACT CHANGE ORDER NO. _____
SHEET _____ OF _____

DETAILS
TOWER AND SUSPENSION CABLE
TOWER POWER AND LIGHTING

AS NOTED

E-285

THIS PLAN ACCURATE FOR ELECTRICAL WORK ONLY.

ALL DIMENSIONS ARE IN MILLIMETERS UNLESS OTHERWISE SHOWN

FOR REDUCED PLANS ORIGINAL SCALE IS IN MILLIMETERS 0 20 40 60 80

DGN FILE =>T:\13103\MS\pse\SAS Struc\CCO\SAS CC042\04-0120f1_0288R01.dgn
USERNAME =>llorico

CU 04251

EA 0120F1

LAST REVISION 00-00-00
DATE PLOTTED => 3/17/2008
TIME PLOTTED => 5:27:45 PM

STATE OF CALIFORNIA - DEPARTMENT OF TRANSPORTATION
Caltrans

DESIGN OVERSIGHT
BEHZAD GOLEMOHAMMADI

CALCULATED/DESIGNED BY
CHECKED BY

REVISED BY	DATE	FK	EDC
DATE REVISED	10/01	11/01	

DIST	COUNTY	ROUTE	KILOMETER POST TOTAL PROJECT	SHEET No	TOTAL SHEETS
04	SF	80	13.2/13.9	289R1	1204

12/19/02
REGISTERED ELECTRICAL ENGINEER DATE

12-6-04
PLANS APPROVAL DATE

REGISTERED PROFESSIONAL ENGINEER — JENS ERLINGSSON No. 8249 Exp. 9/30/06 ELECTRICAL — STATE OF CALIFORNIA

PB POWER, Inc.
A Parsons Brinckerhoff Company
303 Second St., Suite 700N
San Francisco, CA 94107-1317

The State of California or its officers or agents shall not be responsible for the accuracy or completeness of electronic copies of this plan sheet.

Caltrans now has a web site! To get to the web site, go to http://www.dot.ca.gov

Caltrans Metric

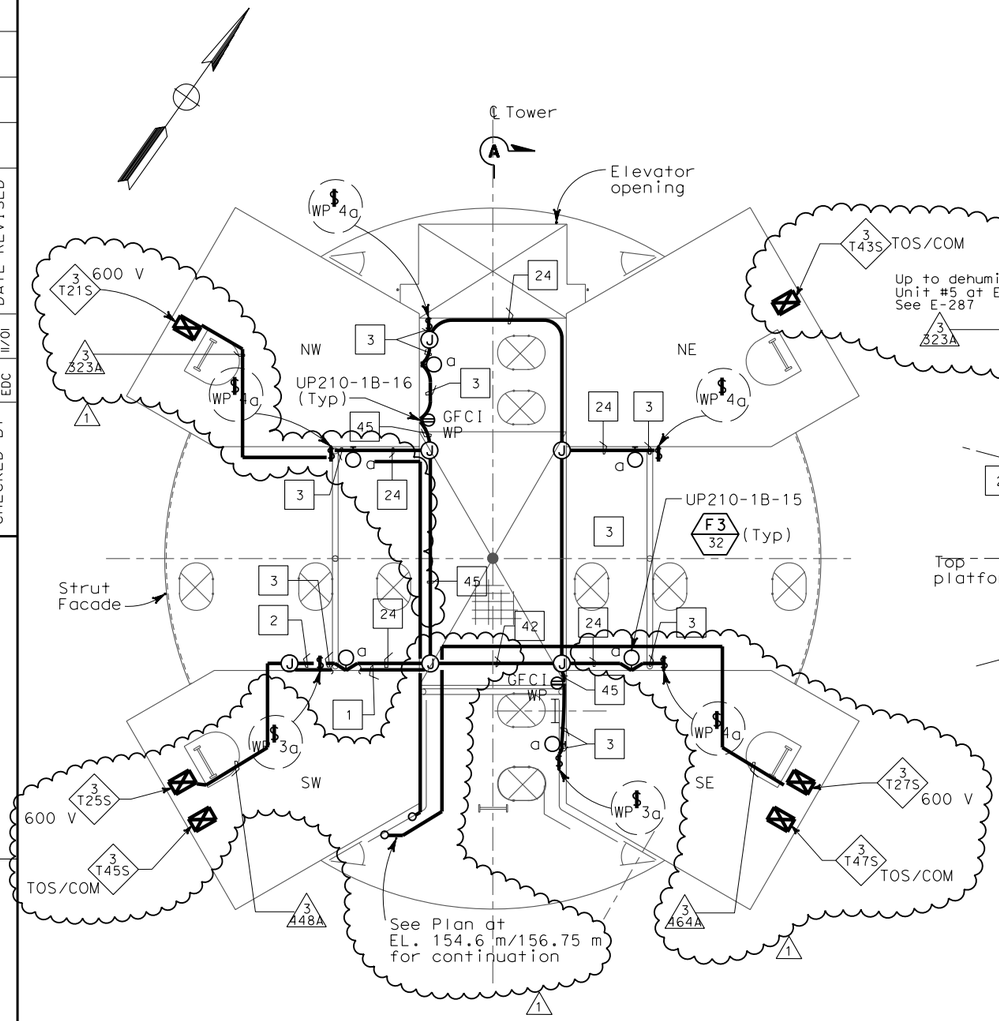

PLAN AT ELEV 139.85 m
SCALE: 1:40

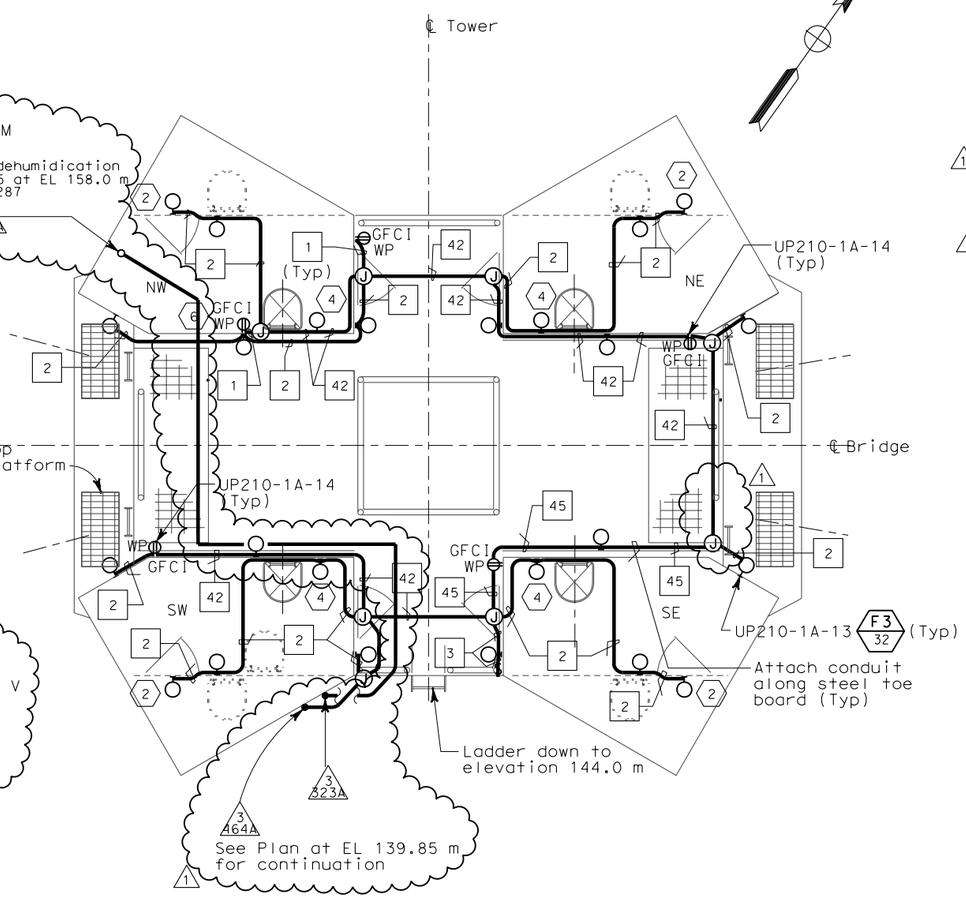

PLAN AT ELEVATIONS 154.6 m TO 156.75 m
SCALE: 1:40

SHEET NOTES:

1. Deleted.
2. Fixture mounting height elevation shall be 158.5 m.
3. Deleted.
4. Fixture mounting height elevation shall be 159.25 m.
5. Conduit from elevation 89.85 up to elevation 156.75.
6. Receptacle mounting height elevation shall be 158.450 m.

NOTES:

1. References:
   - For utility panels UP210-1A and UP210-1B, panel schedules see sheets E-279 and E-280.
   - For types of pull boxes, splice boxes and enclosures, see sheets E-83 and E-169.
   - For conduit and cable tray schedules, see sheets starting at E-401.
   - For lighting installation details, see sheet E-267.
   - For lighting fixture schedule, see sheet E-263.
   - For sections A-A and J-J, see sheet E-287.
   - For typical conduit installation details, see sheet E-268.
   - For vertical conduit runs support system, see sheet E-287.
2. All conduits and fittings routed exposed at grating shall be rigid galvanized steel, PVC coated.
3. Fixture mounting height shall be 2.125 m above floor/platform elevation UNO.
4. Electrical conduits shall enter the tower shafts between stiffeners A3 and A4 only. For conduit entry details, see Structural Utility drawings.
5. For other related work not shown on this sheet, see Electrical Special Provisions.

REGISTERED PROFESSIONAL ENGINEER — MAXWELL FUMIO TAKATA No. E 8651 Exp. 9/30/2008 ELECTRICAL — STATE OF CALIFORNIA

FOR REVISION ONLY

REQUEST FOR INFORMATION NOT ADDRESSED IN THIS CCO REMAIN IN FORCE

MARK	DATE	DESCRIPTIONS	BY	CH'D	CCO#
		REVISIONS			
1	02/19/08	ELECTRICAL MODIFICATIONS	MP EL	RR	42

CONTRACT CHANGE ORDER NO._____
SHEET _____ OF _____

DETAILS
TOWER AND SUSPENSION CABLE TOWER POWER AND LIGHTING
SCALE 1:50

E-286

THIS PLAN ACCURATE FOR ELECTRICAL WORK ONLY.

ALL DIMENSIONS ARE IN MILLIMETERS UNLESS OTHERWISE SHOWN

FOR REDUCED PLANS ORIGINAL SCALE IS IN MILLIMETERS 0 20 40 60 80

DGN FILE =>T:\13103\MS\pse\SAS Struc\CCO\SAS CC042\04-0120f1_0289R01.dgn
USERNAME =>llorico

CU 04251

EA 0120F1

STATE OF CALIFORNIA - DEPARTMENT OF TRANSPORTATION
Caltrans
DESIGN OVERSIGHT BEHZAD GOLEMOHAMMADI

CALCULATED/ DESIGNED BY	FK	DATE 10/01	REVISED BY
CHECKED BY	EDC	11/01	DATE REVISED

LAST REVISION 00-00-00
DATE PLOTTED => 3/17/2008
TIME PLOTTED => 5:28:19 PM

DIST	COUNTY	ROUTE	KILOMETER POST TOTAL PROJECT	SHEET No	TOTAL SHEETS
04	SF	80	13.2/13.9	290R1	1204

Caltrans Metric

REGISTERED ELECTRICAL ENGINEER 12/19/02 DATE

12-6-04
PLANS APPROVAL DATE

PB POWER, Inc.
A Parsons Brinckerhoff Company
303 Second St., Suite 700N
San Francisco, CA 94107-1317

REGISTERED PROFESSIONAL ENGINEER JENS ERLINGSSON No. 8249 Exp. 9/30/06 ELECTRICAL STATE OF CALIFORNIA

The State of California or its officers or agents shall not be responsible for the accuracy or completeness of electronic copies of this plan sheet.

Caltrans now has a web site! To get to the web site, go to http://www.dot.ca.gov

The following are review comments for this sheet

1. The conduit references indicate conductors on both side of a conduit run with empty conduit between. See Conduit schedule with comments. E-426, E-429, E-449C.

2. Some of the conduit numbers with suffix of A, B,, etc. do not have contents indicated but some do. Is there a note somewhere explaining this?

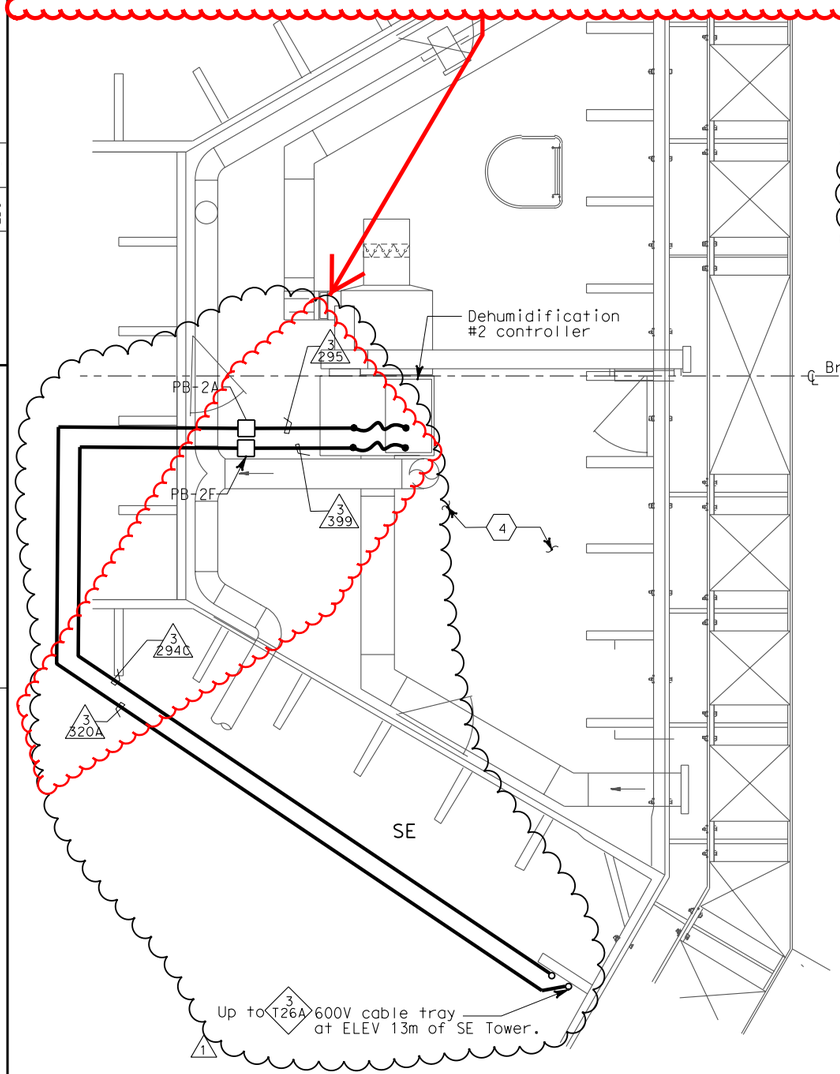

DEHUMIDIFICATION UNIT #2 PLAN- AT ELEV. 9.0 m

NO SCALE

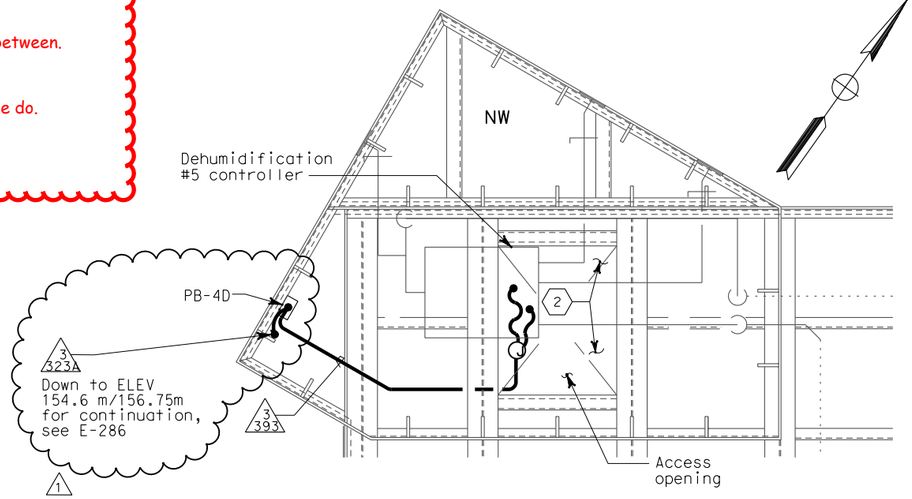

DEHUMIDIFICATION UNIT #5 PLAN- AT ELEV. 158.0 m

SCALE: 1:20

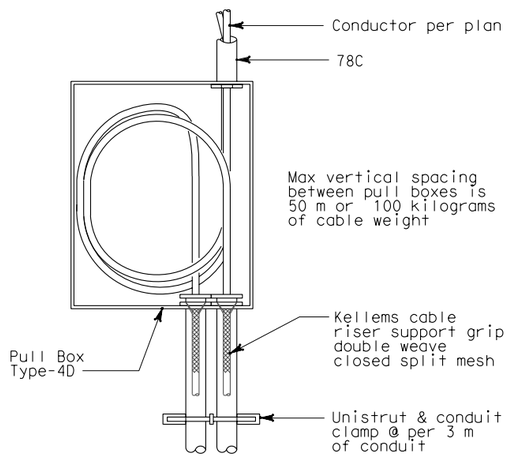

CABLE AND CONDUIT SUPPORT SYSTEM FOR VERTICAL CABLE RUNS

SCALE: 1:10

SHEET NOTES:

1. Deleted.
2. For lighting and receptacles in this area, see plan at elevations 154.6 m to 156.75 m on sheet E-268.
3. Deleted.
4. For lighting and receptacles in this area, see sheet E-266.

NOTES:

1. References:
   - For types of pull boxes, splice boxes and enclosures, see sheets E-83 and E-169.
   - For conduit and cable tray schedules, see sheets starting at E-401.
   - For typical conduit installation details, see sheet E-268.
2. For other related work not shown on this sheet, see Electrical Special Provisions.

REGISTERED PROFESSIONAL ENGINEER MAXWELL FUMIO TAKAKI No. E 8651 Exp. 9/30/2008 ELECTRICAL STATE OF CALIFORNIA

FOR REVISION ONLY

REQUEST FOR INFORMATION NOT ADDRESSED IN THIS CCO REMAIN IN FORCE

MARK	DATE	DESCRIPTIONS	BY	CH'D	CCO#
1	02/19/08	ELECTRICAL MODIFICATIONS	MP EL	RR	42

REVISIONS

CONTRACT CHANGE ORDER NO._____
SHEET _____ OF _____

DETAILS
TOWER AND SUSPENSION CABLE
TOWER POWER AND LIGHTING

SCALE AS NOTED

E-287

STATE OF CALIFORNIA - DEPARTMENT OF TRANSPORTATION
Caltrans

DESIGN OVERSIGHT: BEHZAD GOLEMOHAMMADI

CALCULATED/DESIGNED BY: FK | DATE: 10/01 | REVISED BY
CHECKED BY: EDC | 11/01 | DATE REVISED

DATE PLOTTED => 3/17/2008
TIME PLOTTED => 5:28:40 PM
LAST REVISION 00-00-00

FOR REDUCED PLANS ORIGINAL SCALE IS IN MILLIMETERS 0 20 40 60 80

DGN FILE =>T:\13103\MS\pse\SAS Struc\CCO\SAS CCO42\04-0120f1_0290R01.dgn
USERNAME =>llorico

CU 04251 | EA 0120F1

DIST	COUNTY	ROUTE	KILOMETER POST TOTAL PROJECT	SHEET No	TOTAL SHEETS
04	SF	80	13.2/13.9	333R1	1204

REGISTERED ELECTRICAL ENGINEER 12/19/02 DATE

12-6-04
PLANS APPROVAL DATE

PB POWER, Inc.
A Parsons Brinckerhoff Company
303 Second St., Suite 700N
San Francisco, CA 94107-1317

REGISTERED PROFESSIONAL ENGINEER JENS ERLINGSSON No. 8249 Exp. 9/30/06 ELECTRICAL STATE OF CALIFORNIA

The State of California or its officers or agents shall not be responsible for the accuracy or completeness of electronic copies of this plan sheet.

Caltrans now has a web site! To get to the web site, go to http://www.dot.ca.gov

Caltrans Metric

NOTES:

1. For other related work not shown on this drawing, see Electrical Special Provisions.
2. References:
   - For sensors and recorder schedules, see sheets E-379, E-380 and E-381.
   - For cable block diagram, see sheets E-383 and E-384.
   - For general notes of the strong motion detection system, see sheet E-361.
   - For circuit and conduit / cable tray Schedules, see sheets starting at E-401.
3. All conduits and fittings located outside or inside pier shall be rigid galvanized steel, PVC coated.

SHEET NOTES:

(1) Sensors mounted on suspension cables refer to sheet E-377.

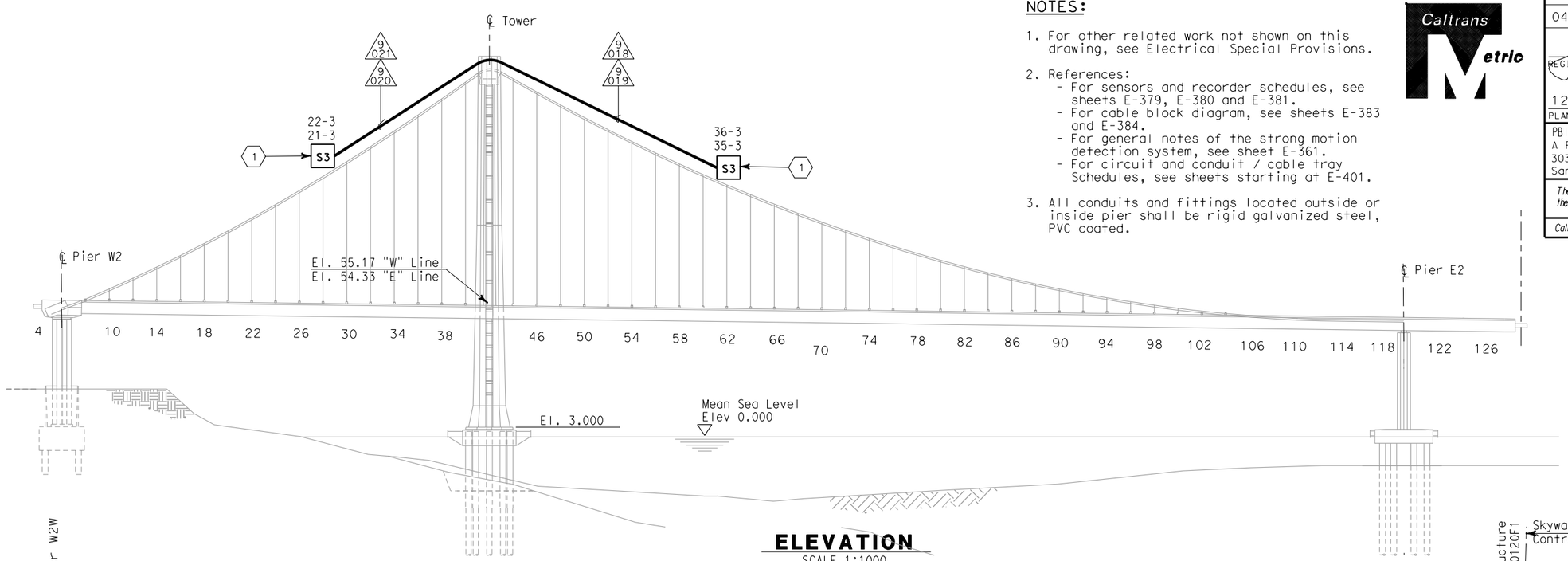

ELEVATION
SCALE 1:1000

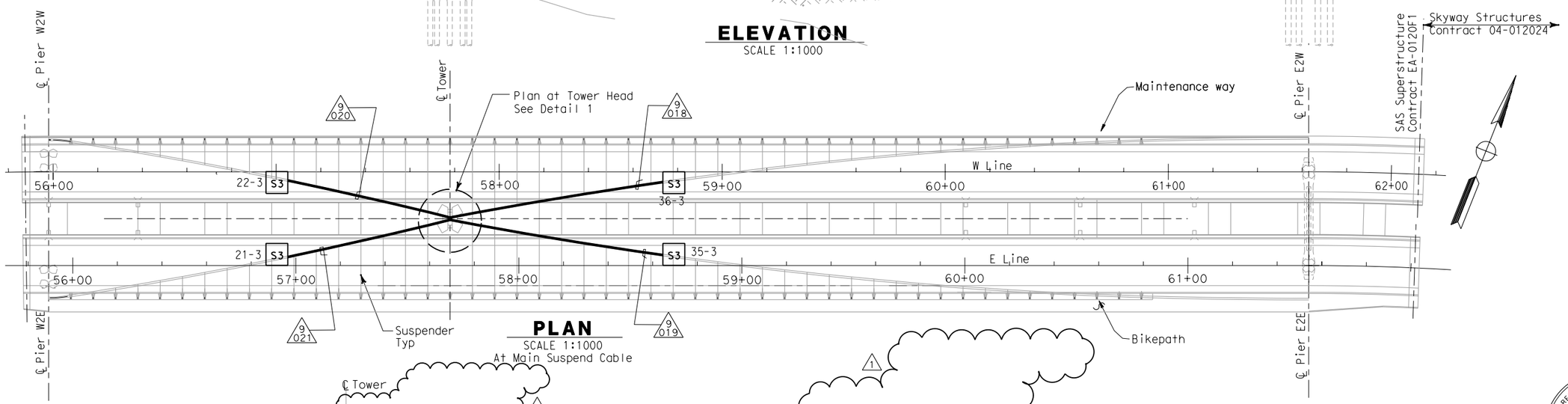

PLAN
SCALE 1:1000
At Main Suspend Cable

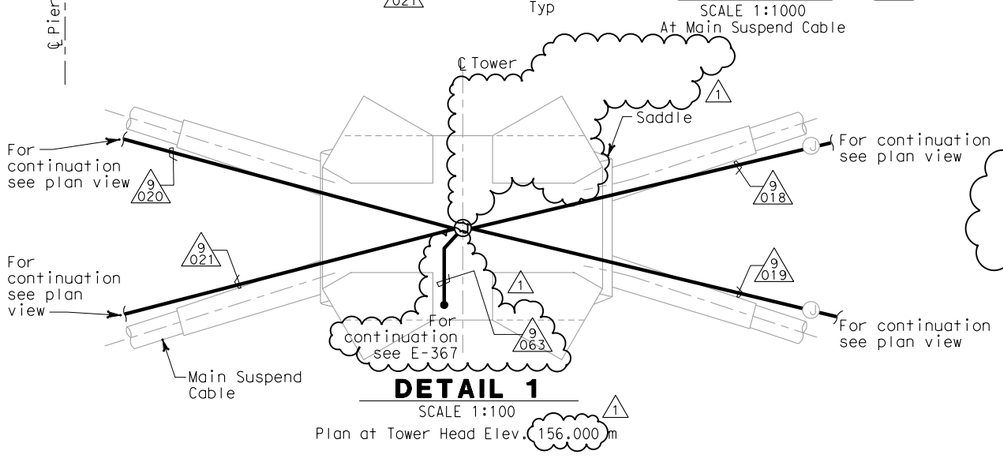

DETAIL 1
SCALE 1:100
Plan at Tower Head Elev. 156.000 m

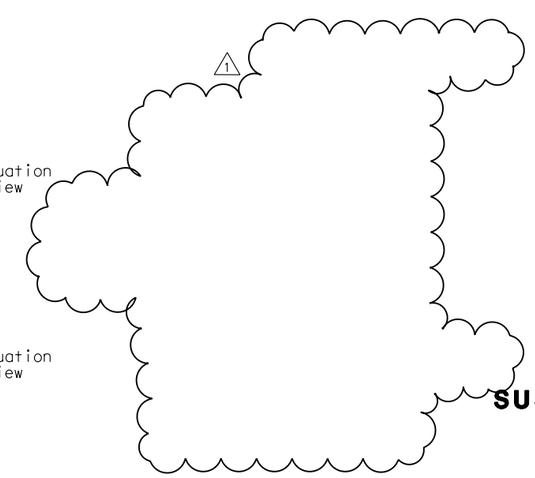

REQUEST FOR INFORMATION NOT ADDRESSED IN THIS CCO REMAIN IN FORCE

MARK	DATE	DESCRIPTIONS	BY	CH'D	CCO#
1	02/19/08	ELECTRICAL MODIFICATIONS	MP EL	RR	42

REVISIONS

CONTRACT CHANGE ORDER NO._____
SHEET _____ OF _____

REGISTERED PROFESSIONAL ENGINEER MAXWELL FUMIO TAKAKI No. E 8651 Exp. 9/30/2008 ELECTRICAL STATE OF CALIFORNIA

FOR REVISION ONLY

STRONG MOTION DETECTION SYSTEM
SAS SUPERSTRUCTURE
SUSPENSION CABLE CONDUIT AND SENSOR LOCATION

SCALE AS NOTED

E-365

STATE OF CALIFORNIA - DEPARTMENT OF TRANSPORTATION
Caltrans

DESIGN OVERSIGHT: BEHZAD GOLEMOHAMMADI

CALCULATED/DESIGNED BY | CHECKED BY | DATE | REVISED BY | DATE REVISED

LAST REVISION 00-00-00 | DATE PLOTTED => 3/17/2008 | TIME PLOTTED => 5:29:05 PM

FOR REDUCED PLANS ORIGINAL SCALE IS IN MILLIMETERS 0 20 40 60 80

DGN FILE =>T:\13103\MS\pse\SAS Struc\CCO\SAS CCO42\04-0120f1_0333R01.dgn
USERNAME =>llorico

CU 04251 | EA 0120F1

DIST	COUNTY	ROUTE	KILOMETER POST TOTAL PROJECT	SHEET No	TOTAL SHEETS
04	SF	80	13.2/13.9	334R1	1204

Jens Erlingsson 12/19/02
REGISTERED ELECTRICAL ENGINEER DATE

12-6-04
PLANS APPROVAL DATE

REGISTERED PROFESSIONAL ENGINEER — JENS ERLINGSSON No. 8249 Exp. 9/30/06 ELECTRICAL — STATE OF CALIFORNIA

PB POWER, Inc.
A Parsons Brinckerhoff Company
303 Second St., Suite 700N
San Francisco, CA 94107-1317

The State of California or its officers or agents shall not be responsible for the accuracy or completeness of electronic copies of this plan sheet.

Caltrans now has a web site! To get to the web site, go to: http://www.dot.ca.gov

Caltrans Metric

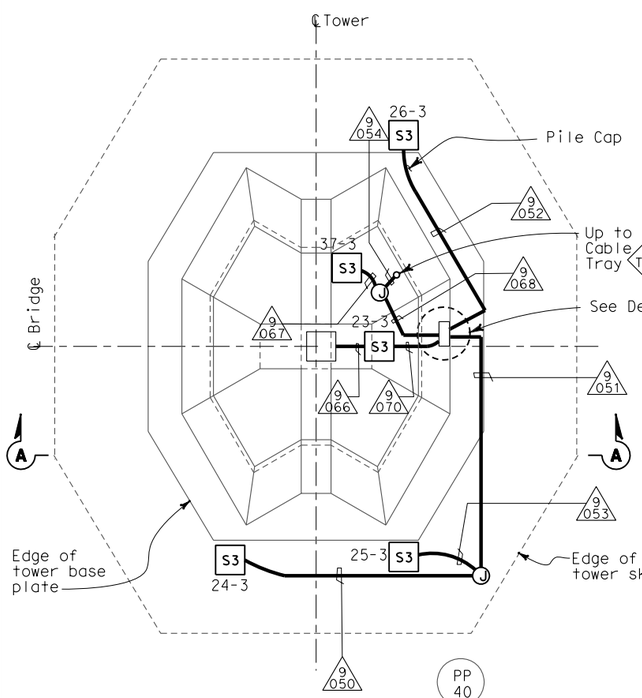

PLAN AT MAIN TOWER, ELEV 3.000 m
SCALE 1:200

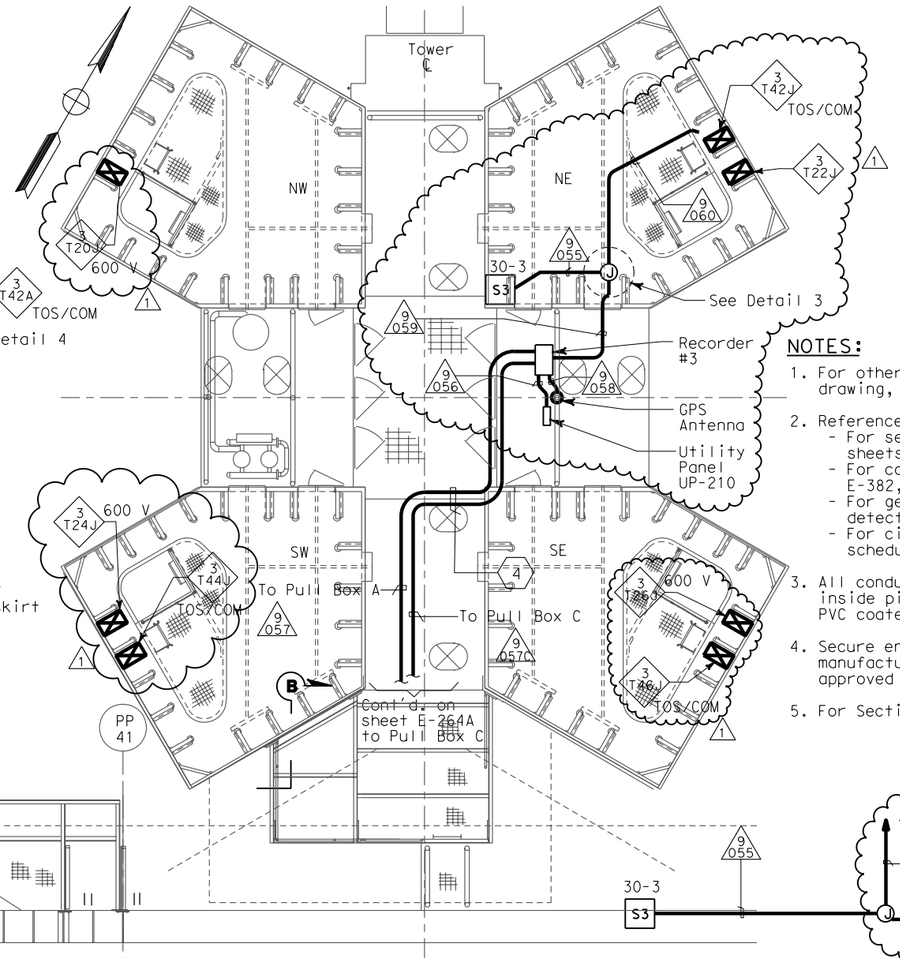

PLAN AT MAIN TOWER, ELEV 53.85 m
SCALE 1:50

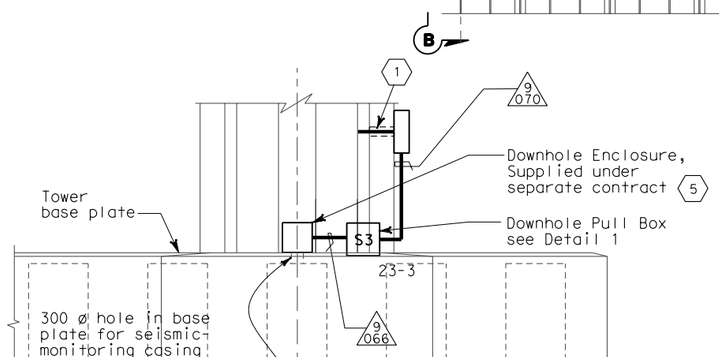

SECTION A-A
SCALE 1:100

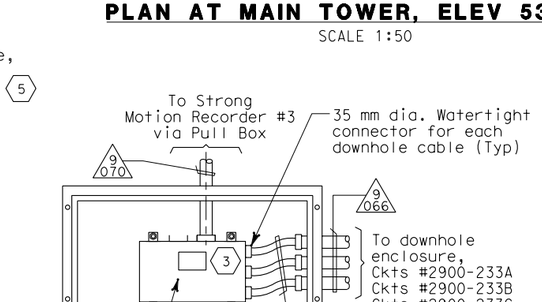

PLAN

DETAIL 1
DOWNHOLE PULL BOX
(SCALE 1:10)

DETAIL 3
NO SCALE

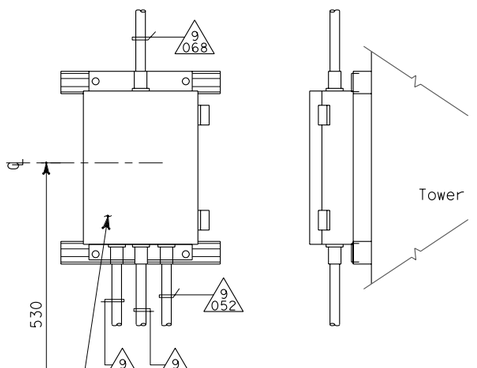

DETAIL 4
NO SCALE

REGISTERED PROFESSIONAL ENGINEER — MARRELL FUMIO TAKATA No. E 8651 Exp. 9/30/2008 ELECTRICAL — STATE OF CALIFORNIA

FOR REVISION ONLY

NOTES:

1. For other related work not shown on this drawing, see Electrical Special Provisions.
2. References:
   - For sensors and recorder schedules. see sheets E-379, E-380 and E-381.
   - For cable block diagram, see sheets E-382, E-383 and E-384.
   - For general notes on the strong motion detection system, see sheet E-361.
   - For circuit and conduit/cable tray schedules, see sheets starting at E-401.
3. All conduits and fittings located outside or inside pier shall be rigid galvanized steel, PVC coated.
4. Secure enclosure to concrete wall with manufacturer's recommended mounting and as approved by the Engineer.
5. For Section B-B, see sheet E-264A.

SHEET NOTES:

1. Pipe sleeves shall be provided with watertight seals after conduits are installed. Spare sleeves shall be capped and plugged.
2. Downhole sensor cables will be furnished and installed by CDMG.
3. For nameplate engraving, see nameplate Schedule on sheet E-379.
4. All conduits which thereafter cross the access walkways shall be raised to a level of at least 2438 above the grating to pass overhead, allowing free walkways on the remaining three quadrants of the platform. Door on north face of SE tower shaft shall remain accessible..
5. Remove Downhole Enclosure and re-install on top of the base plate.

REQUEST FOR INFORMATION NOT ADDRESSED IN THIS CCO REMAIN IN FORCE

MARK	DATE	REVISIONS DESCRIPTIONS	BY	CH'D	CCO#
1	02/19/08	ELECTRICAL MODIFICATIONS	MP EL	RR	42

CONTRACT CHANGE ORDER NO. _____
SHEET _____ OF _____

STRONG MOTION DETECTION SYSTEM
SAS SUPERSTRUCTURE
TOWER PLATFORM CONDUIT AND SENSOR LOCATION
SCALE AS NOTED

E-366

THIS PLAN IS ACCURATE FOR ELECTRICAL WORK ONLY.

ALL DIMENSIONS ARE IN MILLIMETERS UNLESS OTHERWISE SHOWN.

STATE OF CALIFORNIA - DEPARTMENT OF TRANSPORTATION
Caltrans
DESIGN OVERSIGHT: BEHZAD GOLEMOHAMMADI
CALCULATED/DESIGNED BY: EDC
CHECKED BY: KG
DATE: 10/01
REVISED BY: AB
DATE REVISED: 2/04

LAST REVISION 00-00-00 — DATE PLOTTED => 3/17/2008 — TIME PLOTTED => 5:29:40 PM

FOR REDUCED PLANS ORIGINAL SCALE IS IN MILLIMETERS 0 20 40 60 80

DGN FILE =>T:\13103\MS\pse\SAS Struc\CCO\SAS CCO42\04-0120f1_0334R01.dgn
USERNAME =>llorico

CU 04251

EA 0120F1

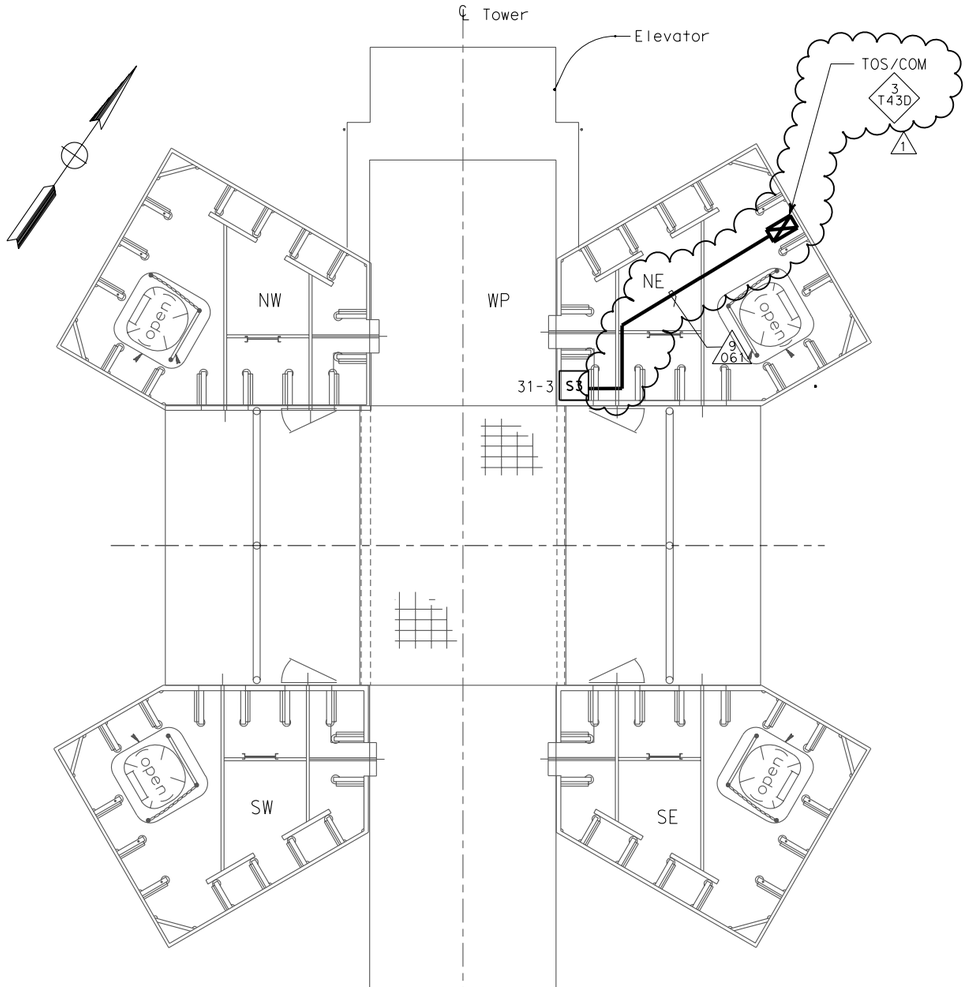

TOWER PLATFORM CONDUIT AND SENSOR LAYOUT
ELEV 93.350 m

SCALE 1:40

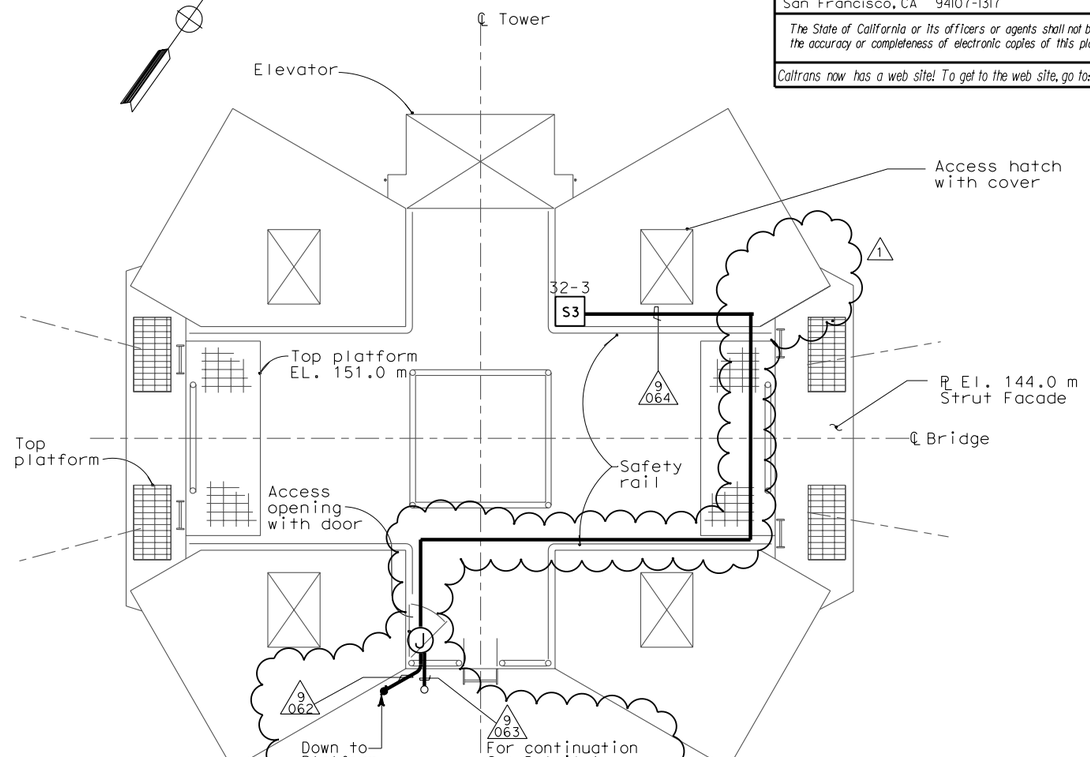

TOWER PLATFORM CONDUIT AND SENSOR LAYOUT
ELEV 151.0 M

SCALE 1:40

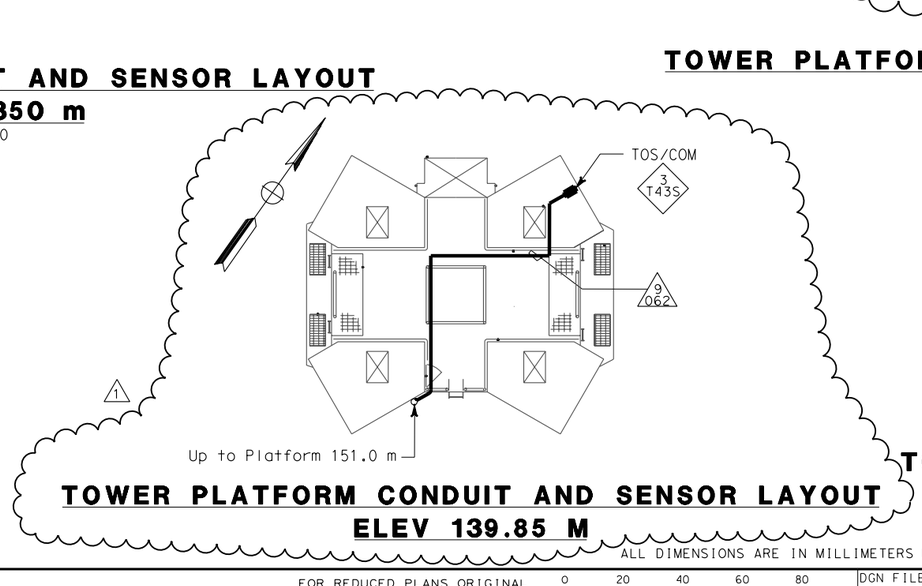

TOWER PLATFORM CONDUIT AND SENSOR LAYOUT
ELEV 139.85 M

NOTES:

1. For other related work not shown on this drawing, see Electrical Special Provisions.
2. References:
   - For sensors and recorder schedules, see sheets E-379, E-380 and E-381.
   - For cable block diagram, see sheets E-382, E-383 and E-384.
   - For general notes of the strong motion detection system, see sheet E-361.
   - For circuit and conduit/cable tray schedules, see sheets starting at E-401.

STRONG MOTION DETECTION SYSTEM
SAS SUPERSTRUCTURE
TOWER PLATFORM CONDUIT AND SENSOR LOCATION

SCALE AS NOTED

E-367

DIST	COUNTY	ROUTE	KILOMETER POST TOTAL PROJECT	SHEET No	TOTAL SHEETS
04	SF	80	13.2/13.9	335R1	1204

Jens Erlingsson 12/19/02
REGISTERED ELECTRICAL ENGINEER DATE

12-6-04
PLANS APPROVAL DATE

REGISTERED PROFESSIONAL ENGINEER — JENS ERLINGSSON No. 8249 Exp. 9/30/06 ELECTRICAL — STATE OF CALIFORNIA

PB POWER, Inc.
A Parsons Brinckerhoff Company
303 Second St., Suite 700N
San Francisco, CA 94107-1317

The State of California or its officers or agents shall not be responsible for the accuracy or completeness of electronic copies of this plan sheet.

Caltrans now has a web site! To get to the web site, go to: http://www.dot.ca.gov

REGISTERED PROFESSIONAL ENGINEER — MARNELL FUMIO TAKARA No. E 8651 Exp. 9/30/2008 ELECTRICAL — STATE OF CALIFORNIA

FOR REVISION ONLY

REQUEST FOR INFORMATION NOT ADDRESSED IN THIS CCO REMAIN IN FORCE

MARK	DATE	REVISIONS DESCRIPTIONS	MP EL BY	RR CH'D	42 CCO#
1	02/19/08	ELECTRICAL MODIFICATIONS			

CONTRACT CHANGE ORDER NO._____
SHEET _____ OF _____

THIS PLAN ACCURATE FOR ELECTRICAL WORK ONLY.

ALL DIMENSIONS ARE IN MILLIMETERS UNLESS OTHERWISE SHOWN.

CALCULATED/ DESIGNED BY	CHECKED BY	DATE	REVISED BY	DATE REVISED
FK	EDC	10/01		11/01

STATE OF CALIFORNIA - DEPARTMENT OF TRANSPORTATION
DESIGN OVERSIGHT
BEHZAD GOLEMOHAMMADI
Caltrans

DATE PLOTTED => 3/17/2008
TIME PLOTTED => 5:30:03 PM
LAST REVISION 00-00-00

FOR REDUCED PLANS ORIGINAL SCALE IS IN MILLIMETERS 0 20 40 60 80

DGN FILE =>T:\13103\MS\pse\SAS Struc\CCO\SAS CCO42\04-0120f1_0335R01.dgn
USERNAME =>llorico
CU 04251
EA 0120F1

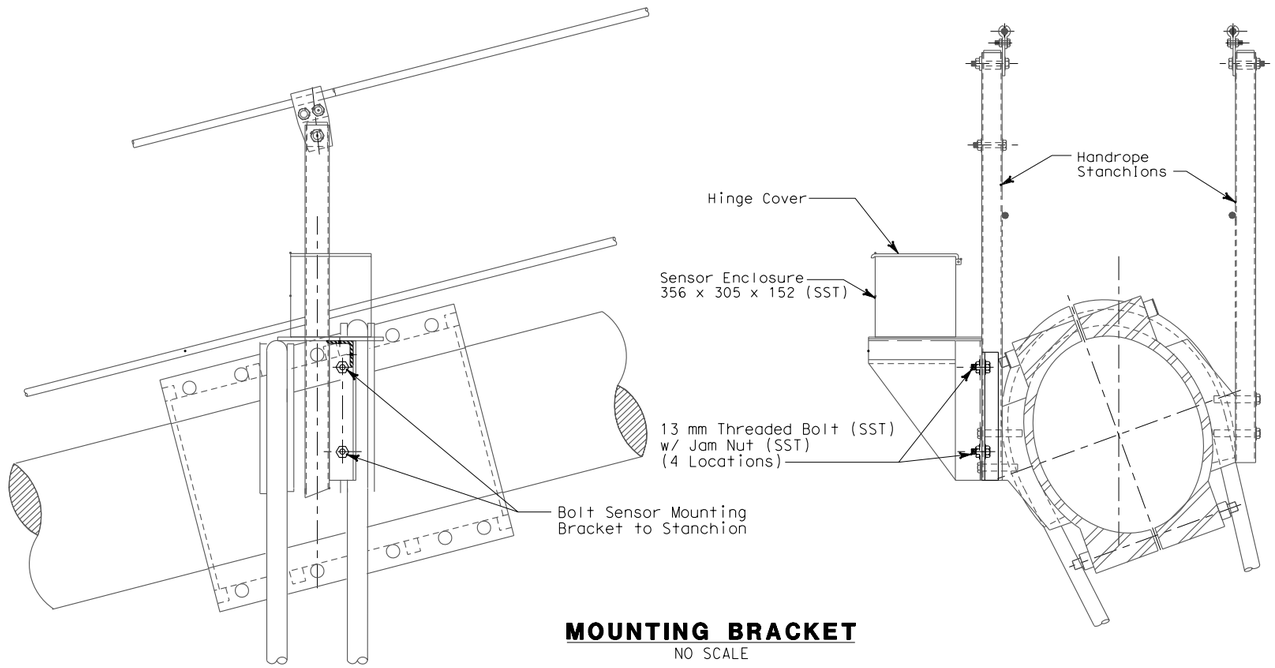

MOUNTING BRACKET
NO SCALE

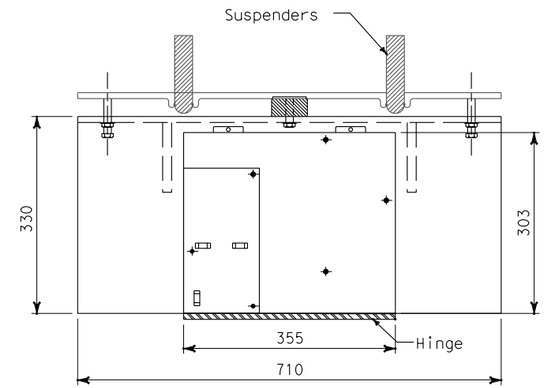

TYPE 6
SENSOR ENCLOSURE
NUMBER 21-3
STAINLESS STEEL BOX
1
NO SCALE

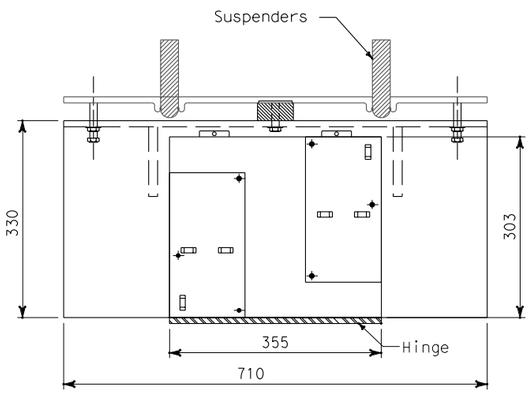

TYPE 6
SENSOR ENCLOSURE
NUMBER 35-3
STAINLESS STEEL BOX
1
NO SCALE

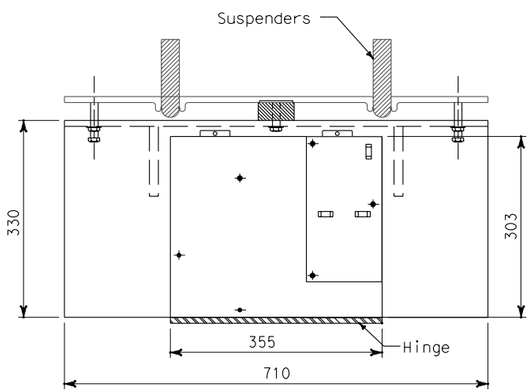

TYPE 6
SENSOR ENCLOSURE
NUMBER 22-3 & 36-3
STAINLESS STEEL BOX
1
NO SCALE

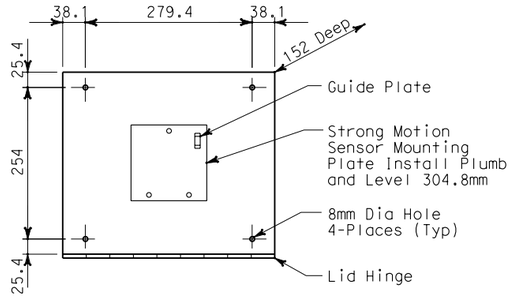

TYPE 7
SENSOR ENCLOSURE
STAINLESS STEEL BOX
1
NO SCALE

NOTES:

1. For other related work not shown on this drawing, see Electrical Special Provisions.
2. References:
   - For sensors and recorder schedules, see sheets E-379, E-380 and E-381.
   - For cable block diagram, see sheets E-382, E-383 and E-384.
   - For general notes of the strong motion detection system, see sheet E-361.
   - For circuit and conduit/cable tray schedules, see sheets starting at E-401.
3. All conduits and fittings located outside or inside pier shall be rigid galvanized steel, PVC coated.
4. For sensor enclosures bolt hole details, see AS-sheets.
5. For stanchion details, see Structural sheets.

DIST	COUNTY	ROUTE	KILOMETER POST TOTAL PROJECT	SHEET No	TOTAL SHEETS
04	SF	80	13.2/13.9	343R1	1204

Jens Erlingsson 12/19/02
REGISTERED ELECTRICAL ENGINEER DATE

12-6-04
PLANS APPROVAL DATE

REGISTERED PROFESSIONAL ENGINEER — JENS ERLINGSSON No. 8249 Exp. 9/30/06 ELECTRICAL — STATE OF CALIFORNIA

PB POWER, Inc.
A Parsons Brinckerhoff Company
303 Second St., Suite 700N
San Francisco, CA 94107-1317

The State of California or its officers or agents shall not be responsible for the accuracy or completeness of electronic copies of this plan sheet.

Caltrans now has a web site! To get to the web site, go to http://www.dot.ca.gov

MARK	DATE	REVISIONS	BY	CH'D	CCO#
		REQUEST FOR INFORMATION NOT ADDRESSED IN THIS CCO REMAIN IN FORCE			
1	02/19/08	ELECTRICAL MODIFICATIONS	MP EL	RR	42

CONTRACT CHANGE ORDER NO._____
SHEET _____ OF _____

REGISTERED PROFESSIONAL ENGINEER — MAXWELL FUMIO TAKAKI No. E 8651 Exp. 9/30/2008 ELECTRICAL — STATE OF CALIFORNIA

FOR REVISION ONLY

DETAILS
STRONG MOTION DETECTION SYSTEM
SUSPENSION CABLE SENSOR ENCLOSURES AND MOUNTING
SCALE AS NOTED

E-377

CALCULATED/ DESIGNED BY	EDC	DATE 10/01	REVISED BY	IAH	3/04
CHECKED BY	KG	11/01	DATE REVISED		

DESIGN OVERSIGHT
BEHZAD GOLEMOHAMMADI

STATE OF CALIFORNIA - DEPARTMENT OF TRANSPORTATION
Caltrans

THIS PLAN IS ACCURATE FOR ELECTRICAL WORK ONLY.

ALL DIMENSIONS ARE IN MILLIMETERS UNLESS OTHERWISE SHOWN.

FOR REDUCED PLANS ORIGINAL SCALE IS IN MILLIMETERS 0 20 40 60 80

DGN FILE =>T:\13103\MS\pse\SAS Struc\CCO\SAS CC042\04-0120f1_0343R01.dgn
USERNAME =>llorico
CU 04251
EA 0120F1

LAST REVISION 00-00-00
DATE PLOTTED => 3/17/2008
TIME PLOTTED => 5:30:29 PM

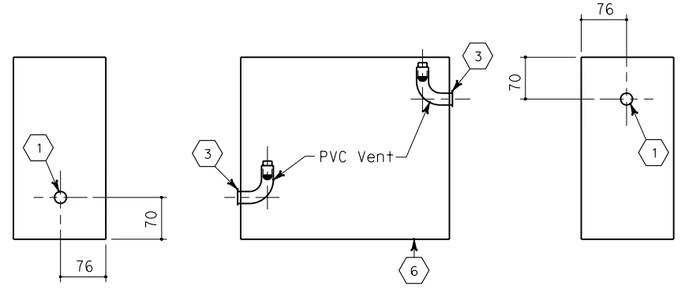

SIDE VIEW ELEVATION SIDE VIEW

ENCLOSURE VENTING DETAIL

VERTICAL MOUNT

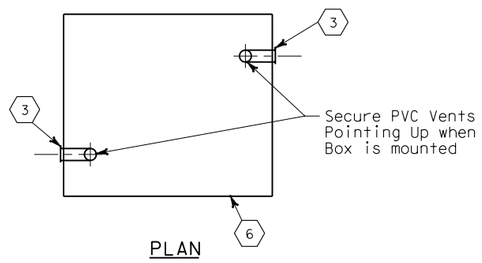

PLAN

ENCLOSURE VENTING DETAIL

HORIZONTAL MOUNT

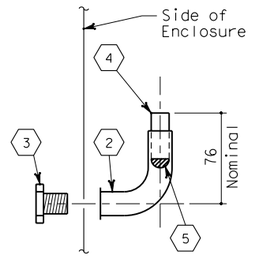

PVC VENT DETAIL

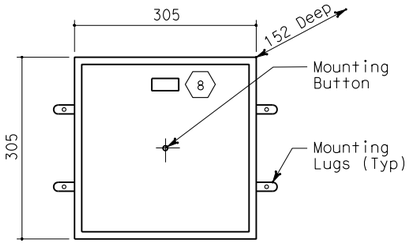

TYPE 1
CAST METAL BOX

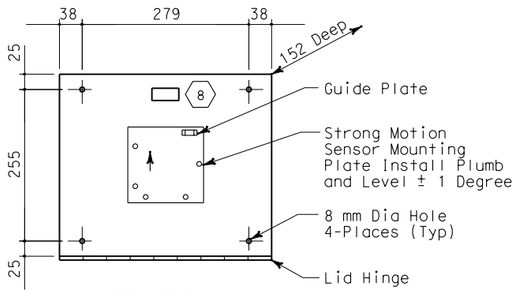

TYPE 2
1 STAINLESS STEEL BOX

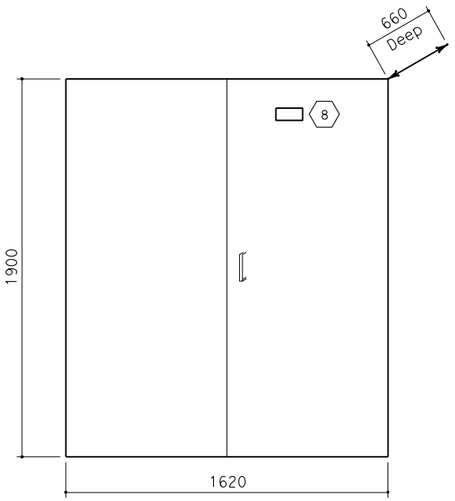

STRONG MOTION RECORDER (7)

CALTRANS TYPE S

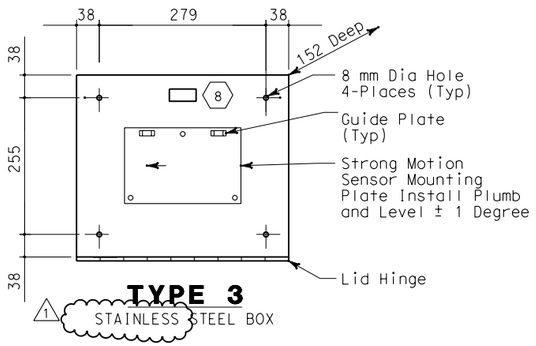

TYPE 3
1 STAINLESS STEEL BOX

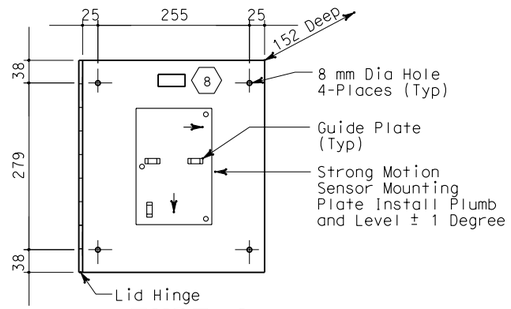

TYPE 4
1 STAINLESS STEEL BOX

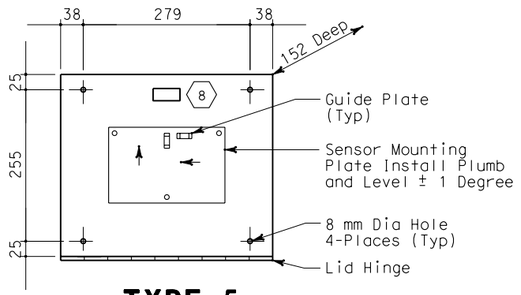

TYPE 5
1 STAINLESS STEEL BOX

ENCLOSURE DETAILS

FRONT VIEW

REGISTERED PROFESSIONAL ENGINEER
MARWELL FUMIO TAKATA
No. E 8651
Exp. 9/30/2008
ELECTRICAL
STATE OF CALIFORNIA

FOR REVISION ONLY

SHEET NOTES:

1. Punch hole for 27C.
2. 27C, schedule 40 PVC, 90 °elbow (female threaded-female slip).
3. 27 chase nipple, zinc.
4. 27C, schedule 40 PVC. Secure item in place with PVC cement (length as required, cut after installation).
5. Hose screen, Stainless steel screen material (used in washing machine).
6. 3.2 mm diameter drain hole. Drill at the lowest point of the box to drain any moisture.
7. Enclosures for Strong Motion Recorders #3 and #2 shall be Caltrans Type S, corrosion resistant without shelves or police panels.
8. See nameplate schedule for engravings and materials.

NOTES:

1. The high and low vent sides shall be selected as required to facilitate conduit entrances and mounting location.
2. Strong motion sensor enclosures and mounting plates shall be installed level, plumb, parallel and perpendicular to the structure unless otherwise noted.
3. Strong motion enclosures shall be mounted to concrete wall with concrete fasteners, 6.35 dia, 40 mm depth embedment and allowable working load of tension at 1.223 kN and shear 2.91 kN. Enclosures mounted on structural steel shall be drill and tap. The strong motion sensor mounting plate shall be bolted through the enclosure to the structural steel. All hardware except fasteners shall be stainless steel.
4. For Downhole Enclosures details, see Sheet E-379.

REQUEST FOR INFORMATION NOT ADDRESSED IN THIS CCO REMAIN IN FORCE					
1	02/19/08	ELECTRICAL MODIFICATIONS	MP EL	RR	42
MARK	DATE	DESCRIPTIONS	BY	CH'D	CCO#
REVISIONS					

CONTRACT CHANGE ORDER NO._____
SHEET _____ OF _____

ALL DIMENSIONS ARE IN MILLIMETERS UNLESS OTHERWISE SHOWN.

DETAILS
STRONG MOTION DETECTION SYSTEM SENSOR AND RECORDER ENCLOSURES

NO SCALE

E-378

DIST	COUNTY	ROUTE	KILOMETER POST TOTAL PROJECT	SHEET No	TOTAL SHEETS
04	SF	80	13.2/13.9	344R1	1204

Jens Erlingsson 12/19/02
REGISTERED ELECTRICAL ENGINEER DATE

12-6-04
PLANS APPROVAL DATE

REGISTERED PROFESSIONAL ENGINEER
JENS ERLINGSSON
No. 8249
Exp. 9/30/06
ELECTRICAL
STATE OF CALIFORNIA

PB POWER, Inc.
A Parsons Brinckerhoff Company
303 Second St., Suite 700N
San Francisco, CA 94107-1317

The State of California or its officers or agents shall not be responsible for the accuracy or completeness of electronic copies of this plan sheet.

Caltrans now has a web site! To get to the web site, go to http://www.dot.ca.gov

Caltrans Metric

DESIGN OVERSIGHT: BEHZAD GOLEMOHAMMADI
CALCULATED/DESIGNED BY: EJL
CHECKED BY: CYF
DATE: 10/00
REVISED BY: 11/00
DATE REVISED:

STATE OF CALIFORNIA - DEPARTMENT OF TRANSPORTATION
Caltrans

FOR REDUCED PLANS ORIGINAL SCALE IS IN MILLIMETERS 0 20 40 60 80

DGN FILE =>T:\13103\MS\pse\SAS Struc\CCO\SAS CC042\04-0120f1_0344R01.dgn
USERNAME =>llorico

CU 04251 EA 0120F1

LAST REVISION 00-00-00
DATE PLOTTED => 3/17/2008
TIME PLOTTED => 5:30:51 PM

DIST	COUNTY	ROUTE	KILOMETER POST TOTAL PROJECT	SHEET No	TOTAL SHEETS
04	SF	80	13.2/13.9	351R1	1204

Jens Erlingsson 12/19/02
REGISTERED ELECTRICAL ENGINEER DATE

12-6-04
PLANS APPROVAL DATE

REGISTERED PROFESSIONAL ENGINEER
JENS ERLINGSSON
No. 8249
Exp. 9/30/06
ELECTRICAL
STATE OF CALIFORNIA

PB POWER, Inc.
A Parsons Brinckerhoff Company
303 Second St., Suite 700N
San Francisco, CA 94107-1317

The State of California or its officers or agents shall not be responsible for the accuracy or completeness of electronic copies of this plan sheet.

Caltrans now has a web site! To get to the web site, go to http://www.dot.ca.gov

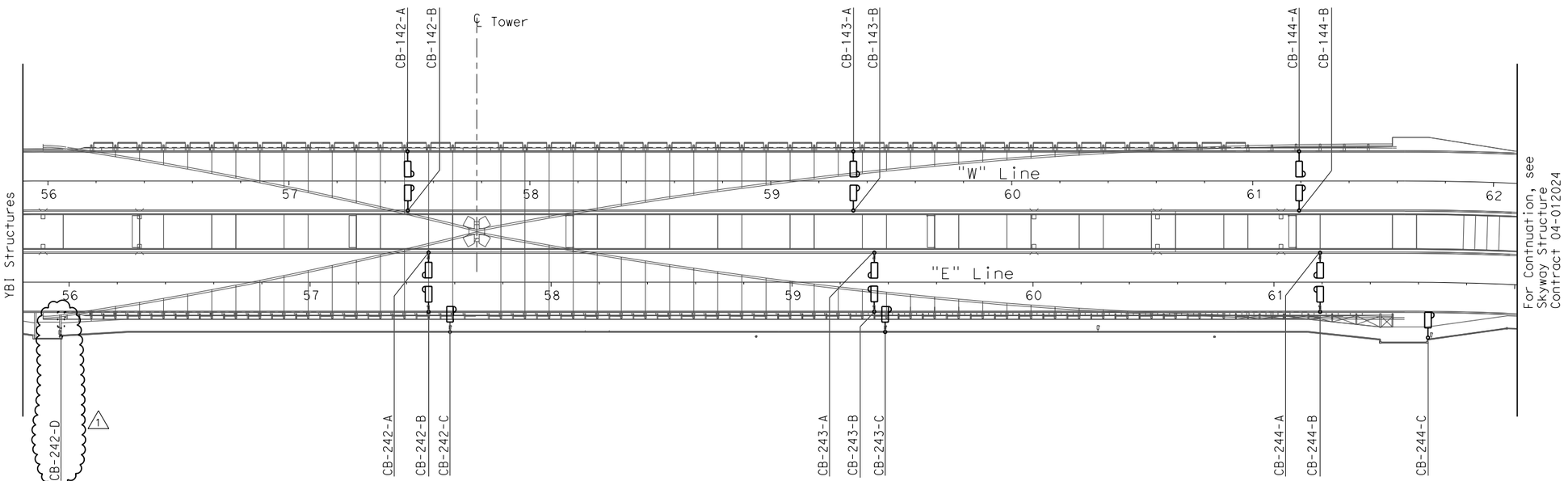

PLAN

NOTES:

1. References:
   - For call box conduit routing see sheets E-46 thru E-51 (WB), and sheets E-135 thru E-140 (EB).
   - For call box schedule, see sheet E-397.
   - For call box wiring diagrams, see sheets E-398 (WB), and sheets E-399 and E-400 (EB).
   - Call box are State-furnished and Contractor installed.

REGISTERED PROFESSIONAL ENGINEER
MAXWELL FUMIO TAKATA
No. E 8651
Exp. 9/30/2008
ELECTRICAL
STATE OF CALIFORNIA

FOR REVISION ONLY

REQUEST FOR INFORMATION NOT ADDRESSED IN THIS CCO REMAIN IN FORCE

MARK	DATE	DESCRIPTIONS	BY	CH'D	CCO#
		REVISIONS			
1	02/19/08	ELECTRICAL MODIFICATIONS	MP EL	RR	42

CONTRACT CHANGE ORDER NO._____
SHEET _____ OF _____

CALL BOX SYSTEM
SAS SUPERSTRUCTURE LOCATIONS
SCALE 1:1000

E-396

THIS PLAN ACCURATE FOR ELECTRICAL WORK ONLY.

ALL DIMENSIONS ARE IN MILLIMETERS UNLESS OTHERWISE SHOWN.

STATE OF CALIFORNIA - DEPARTMENT OF TRANSPORTATION
Caltrans
DESIGN OVERSIGHT
BEHZAD GOLEMOHAMMADI

CALCULATED/ DESIGNED BY	KG	DATE 11/01	REVISED BY
CHECKED BY	EDC	11/01	DATE REVISED

LAST REVISION 00-00-00
DATE PLOTTED => 3/17/2008
TIME PLOTTED => 5:31:11 PM

FOR REDUCED PLANS ORIGINAL SCALE IS IN MILLIMETERS 0 20 40 60 80

DGN FILE =>T:\13103\MS\pse\SAS Struc\CCO\SAS CC042\04-0120f1_0351R01.dgn
USERNAME =>llorico

CU 04251

EA 0120F1

DIST	COUNTY	ROUTE	KILOMETER POST TOTAL PROJECT	SHEET No	TOTAL SHEETS
04	SF	80	13.2/13.9	352R1	1204

Jens Erlingsson 12/19/02
REGISTERED ELECTRICAL ENGINEER DATE

12-6-04
PLANS APPROVAL DATE

REGISTERED PROFESSIONAL ENGINEER
JENS ERLINGSSON
No. 8249
Exp. 9/30/06
ELECTRICAL
STATE OF CALIFORNIA

PB POWER, Inc.
A Parsons Brinckerhoff Company
303 Second St., Suite 700N
San Francisco, CA 94107-1317

The State of California or its officers or agents shall not be responsible for the accuracy or completeness of electronic copies of this plan sheet.

Caltrans now has a web site! To get to the web site, go to http://www.dot.ca.gov

CALL BOX SCHEDULE - WESTBOUND

Call Box Number	Station Number	Mounting Type	Location: Roadway Location	RTU Connection	Remarks
CB-142A	57 + 49	Steel Barrier	Westbound North	RTU #10W	
CB-142B	57 + 49	Steel Barrier	Westbound South	RTU #10W	
CB-143A	59 + 34	Steel Barrier	Westbound North	RTU #11W	
CB-143B	59 + 34	Steel Barrier	Westbound South	RTU #11W	
CB-144A	61 + 19	Steel Barrier	Westbound North	RTU #11W	
CB-144B	61 + 19	Steel Barrier	Westbound South	RTU #11W	

CALL BOX SCHEDULE - EASTBOUND

Call Box Number	Station Number	Mounting Type	Location: Roadway Side	RTU Connection	Remarks
CB-242A	57 + 49	Steel Barrier	Eastbound North	RTU #10E	
CB-242B	57 + 49	Steel Barrier	Eastbound South	RTU #10E	
CB-242C	57 + 67	Bike Path Railing	Bike Path	RTU #10E	At Tower
CB-242D					Installed by others (1)
CB-243A	59 + 34	Steel Barrier	Eastbound North	RTU #11E	
CB-243B	59 + 34	Steel Barrier	Eastbound South	RTU #11E	
CB-243C	59 + 39	Bike Path Railing	Bike Path	RTU #11E	
CB-244A	61 + 19	Steel Barrier	Eastbound North	RTU #11E	
CB-244B	61 + 19	Steel Barrier	Eastbound South	RTU #11E	
CB-244C	61 + 64	Bike Path Railing	Bike Path	RTU #11E	At Pier E2E

NOTES:

1. Call boxes will be State-furnished.
2. References:
   - For RTU #10W, #11W, #10E #11E panel layout, see sheet E-320.

REGISTERED PROFESSIONAL ENGINEER
MAXWELL FUMIO TAKATA
No. E 8651
Exp. 9/30/2008
ELECTRICAL
STATE OF CALIFORNIA

FOR REVISION ONLY

REQUEST FOR INFORMATION NOT ADDRESSED IN THIS CCO REMAIN IN FORCE

MARK	DATE	REVISIONS DESCRIPTIONS	BY	CH'D	CCO#
1	02/19/08	ELECTRICAL MODIFICATIONS	MP EL	RR	42

CONTRACT CHANGE ORDER NO. _____
SHEET _____ OF _____

DETAILS
CALL BOX SYSTEM
CALL BOX SCHEDULES

NO SCALE

E-397

DESIGN OVERSIGHT	CALCULATED/ DESIGNED BY	CHECKED BY	DATE	REVISED BY	DATE REVISED
BEHZAD GOLEMOHAMMADI	EJL	EDC	9/01		11/01

STATE OF CALIFORNIA - DEPARTMENT OF TRANSPORTATION
Caltrans

ALL DIMENSIONS ARE IN MILLIMETERS UNLESS OTHERWISE SHOWN.

FOR REDUCED PLANS ORIGINAL SCALE IS IN MILLIMETERS 0 20 40 60 80

DGN FILE =>T:\13103\MS\pse\SAS Struc\CCO\SAS CC042\04-0120f1_0352R01.dgn
USERNAME =>llorico

CU 04251 EA 0120F1

LAST REVISION 00-00-00
DATE PLOTTED => 3/17/2008
TIME PLOTTED => 5:31:32 PM

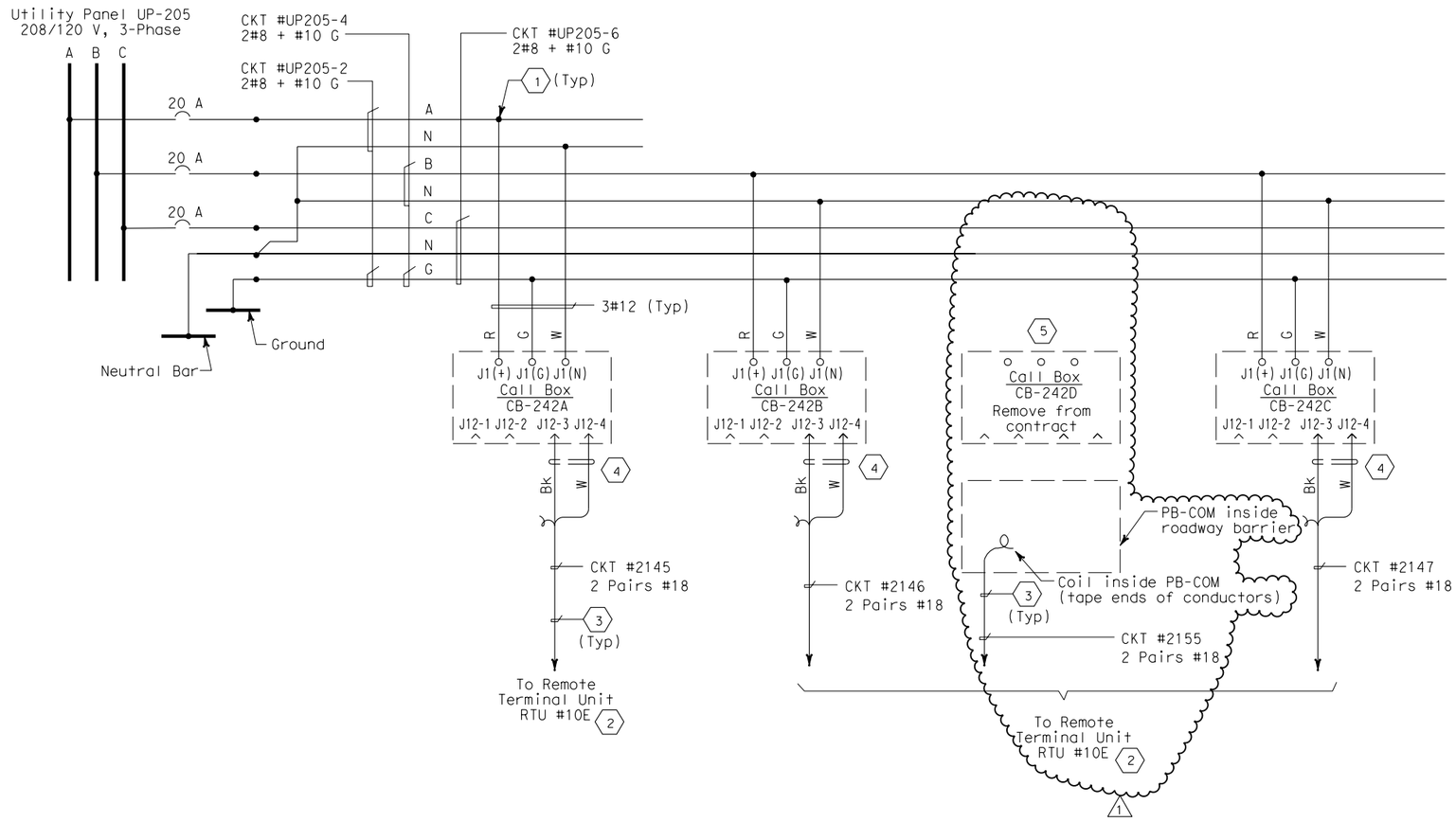

DIST	COUNTY	ROUTE	KILOMETER POST TOTAL PROJECT	SHEET No	TOTAL SHEETS
04	SF	80	13.2/13.9	354R1	1204

REGISTERED ELECTRICAL ENGINEER — 12/19/02 DATE

REGISTERED PROFESSIONAL ENGINEER — JENS ERLINGSSON No. 8249 Exp. 9/30/06 ELECTRICAL — STATE OF CALIFORNIA

12-6-04
PLANS APPROVAL DATE

PB POWER, Inc.
A Parsons Brinckerhoff Company
303 Second St., Suite 700N
San Francisco, CA 94107-1317

The State of California or its officers or agents shall not be responsible for the accuracy or completeness of electronic copies of this plan sheet.

Caltrans now has a web site! To get to the web site, go to http://www.dot.ca.gov

SHEET NOTES:

1. Conductors spliced inside PB-Ltg.
2. For continuation, see RTU #10E connection diagrams sheet E-331.
3. Data cable 1-2 pairs #18 shielded with overall shield. Coil and tape end of pair #2 inside Call Box.
4. The Contractor shall install resistors, approximately equal to the impedance (Zo) of the twised pairs, at the extreme ends of the multidrop network.
5. Not deleted from contract, installed by others.

NOTE:

1. References:
   - For panel schedules, see sheets E-151.
   - For circuit and conduit/cable tray schedules, see sheets starting at E-401.
   - For call boxes schedule, see sheet E-397.

REGISTERED PROFESSIONAL ENGINEER — MARRELL FUMIO TAKAKI No. E 8651 Exp. 9/30/2008 ELECTRICAL — STATE OF CALIFORNIA

FOR REVISION ONLY

REQUEST FOR INFORMATION NOT ADDRESSED IN THIS CCO REMAIN IN FORCE

MARK	DATE	REVISIONS DESCRIPTIONS	BY	CH'D	CCO#
1	02/19/08	ELECTRICAL MODIFICATIONS	MP EL	RR	42

CONTRACT CHANGE ORDER NO._____
SHEET _____ OF _____

EASTBOUND SAS SUPERSTRUCTURE

DETAILS
CALL BOX SYSTEM
CALL BOX WIRING DIAGRAM
NO SCALE

E-399

DESIGN OVERSIGHT: BEHZAD GOLEMOHAMMADI
CALCULATED/DESIGNED BY: EJL
CHECKED BY: EDC
DATE: 09/01 11/01
REVISED BY: DATE REVISED
STATE OF CALIFORNIA - DEPARTMENT OF TRANSPORTATION
Caltrans

LAST REVISION 00-00-00
DATE PLOTTED => 3/17/2008
TIME PLOTTED => 5:31:52 PM

ALL DIMENSIONS ARE IN MILLIMETERS UNLESS OTHERWISE SHOWN.

FOR REDUCED PLANS ORIGINAL SCALE IS IN MILLIMETERS 0 20 40 60 80

DGN FILE =>T:\13103\MS\pse\SAS Struc\CCO\SAS CCO42\04-0120f1_0354R01.dgn
USERNAME =>llorico

CU 04251 EA 0120F1

CONDUIT DATA

Conduit No	Reference	Size	Type	Total Fill (mm²)	Allowable Fill (mm²)	Included Cable No.	Conductor Type
0583	E-11, E-21	103	RGS conduit	3077.66	3324.51	Pull rope	Soft-Fiber Polyester
						2121	1-3/C + gnd #1/0, 600 V, EPR insulation
						2120	1-3/C + gnd #1/0, 600 V, EPR insulation
						2125	1-3/C + gnd 250 kcmil, 600 V, EPR insulation
0584	E-11, E-21	103	RGS conduit	2518.76	3324.51	A-3043-1	1-3/C + gnd #2, 600 V, EPR insulation
						S-3051-1	1-3/C + gnd #4, 600 V, EPR insulation
						A-3006-1	1-3/C + gnd #4, 600 V, EPR insulation
						S-3022-1	1-3/C + gnd #2, 600 V, EPR insulation
						S-3023-1	1-3/C + gnd #4, 600 V, EPR insulation
						S-3021-1	1-3/C + gnd #4, 600 V, EPR insulation
						Pull rope	Soft-Fiber Polyester
0585	E-11, E-20	103	RGS conduit	647.30	3324.51	Pull rope	Soft-Fiber Polyester
						1477-2	72 Fiber, single mode fiberoptic riser cable
						1475-3	72 Fiber, single mode fiberoptic riser cable
0586	E-11, E-21	103	RGS conduit	1296.55	3324.51	2910-2	4 pair #22, shielded pairs, FEP insulation
						Pull rope	Soft-Fiber Polyester
						2910-3	4 pair #22, shielded pairs, FEP insulation
						1473-4	50 pair #18, shielded pairs, IS/OS shield 600 V, XLPE insul., PVC jacket
0587	E-11, E-21	103	RGS conduit	2780.99	3324.51	2391	3-1/C #4/0 + 1/C#1/0 gnd, 15 kV, EPR insulation
						Pull rope	Soft-Fiber Polyester
0588	E-11, E-21	103	RGS conduit	0.00	3324.51	Pull rope	Soft-Fiber Polyester
0590	E-11, E-20	103	RGS conduit	0.00	3324.51	Pull rope	Soft-Fiber Polyester
0591	E-11, E-21	103	RGS conduit	0.00	3324.51	Pull rope	Soft-Fiber Polyester
0600	E-11, E-20	103	RGS conduit	0.00	3324.51	Pull rope	Soft-Fiber Polyester
0601	E-11, E-20	103	RGS conduit	0.00	3324.51	Pull rope	Soft-Fiber Polyester
0602	E-11, E-20	103	RGS conduit	1201.71	3324.51	1474-4	50 pair #18, shielded pairs, IS/OS shield 600V, XLPE insul., PVC jacket
						Pull rope	Soft-Fiber Polyester
0603	E-11, E-20	103	RGS conduit	0.00	3324.51	Pull rope	Soft-Fiber Polyester
0610	E-11, E-21	103	RGS conduit	0.00	3324.51	Pull rope	Soft-Fiber Polyester
0611	E-11, E-21	103	RGS conduit	0.00	3324.51	Pull rope	Soft-Fiber Polyester
0612	E-11, E-21	103	RGS conduit	0.00	3324.51	Pull rope	Soft-Fiber Polyester
0613	E-11, E-21	103	RGS conduit	0.00	3324.51	Pull rope	Soft-Fiber Polyester
1 ~~1112~~							
1113	E-46	41	RGS conduit	0.00	534.55	Pull rope	Soft-Fiber Polyester
1114	E-46	41	RGS conduit	0.00	534.55	Pull rope	Soft-Fiber Polyester
1115	E-46	41	RGS conduit	0.00	534.55	Pull rope	Soft-Fiber Polyester
1116	E-47	41	RGS conduit	0.00	534.55	Pull rope	Soft-Fiber Polyester
1117	E-47	41	RGS conduit	0.00	534.55	Pull rope	Soft-Fiber Polyester
1118	E-47	41	RGS conduit	0.00	534.55	Pull rope	Soft-Fiber Polyester
1119	E-47, E-48	41	RGS conduit	0.00	534.55	Pull rope	Soft-Fiber Polyester
1120	E-48	41	RGS conduit	0.00	534.55	Pull rope	Soft-Fiber Polyester
1121	E-48	41	RGS conduit	0.00	534.55	Pull rope	Soft-Fiber Polyester
1122	E-48	41	RGS conduit	0.00	534.55	Pull rope	Soft-Fiber Polyester
1123	E-49	41	RGS conduit	0.00	534.55	Pull rope	Soft-Fiber Polyester
1124	E-49	41	RGS conduit	0.00	534.55	Pull rope	Soft-Fiber Polyester

REVISED BY | DATE REVISED
DATE 8/02 | 8/02
PBP | AB
CALCULATED/ DESIGNED BY | CHECKED BY

DESIGN OVERSIGHT
BEHZAD GOLEMOHAMMADI

STATE OF CALIFORNIA - DEPARTMENT OF TRANSPORTATION
Caltrans

REQUEST FOR INFORMATION NOT ADDRESSED IN THIS CCO REMAIN IN FORCE

MARK	DATE	DESCRIPTIONS	BY	CH'D	CCO#
		REVISIONS			
1	02/19/08	ELECTRICAL MODIFICATIONS	MP EL	RR	42

CONTRACT CHANGE ORDER NO._____
SHEET _____ OF _____

REGISTERED PROFESSIONAL ENGINEER
MAXWELL FUMIO TAKATA
No. E 8651
Exp. 9/30/2008
ELECTRICAL
STATE OF CALIFORNIA

FOR REVISION ONLY

Caltrans Metric

DIST	COUNTY	ROUTE	KILOMETER POST TOTAL PROJECT	SHEET No	TOTAL SHEETS
04	SF	80	13.2/13.9	357R1	1204

Jens Erlingsson 12/19/02
REGISTERED ELECTRICAL ENGINEER DATE

REGISTERED PROFESSIONAL ENGINEER
JENS ERLINGSSON
No. 8249
Exp. 9/30/06
ELECTRICAL
STATE OF CALIFORNIA

12-6-04
PLANS APPROVAL DATE

PB POWER, Inc.
A Parsons Brinckerhoff Company
303 Second St., Suite 700N
San Francisco, CA 94107-1317

The State of California or its officers or agents shall not be responsible for the accuracy or completeness of electronic copies of this plan sheet.

Caltrans now has a web site! To get to the web site, go to http://www.dot.ca.gov

CONDUIT DATA

Conduit No	Reference	Size	Type	Total Fill (mm²)	Allowable Fill (mm²)	Included Cable No.	Conductor Type
1125	E-49	41	RGS conduit	0.00	534.55	Pull rope	Soft-Fiber Polyester
1126	E-49	41	RGS conduit	0.00	534.55	Pull rope	Soft-Fiber Polyester
1127	E-50	41	RGS conduit	0.00	534.55	Pull rope	Soft-Fiber Polyester
1128	E-50	41	RGS conduit	0.00	534.55	Pull rope	Soft-Fiber Polyester
1129	E-50	41	RGS conduit	0.00	534.55	Pull rope	Soft-Fiber Polyester
1130	E-50, E-51	41	RGS conduit	0.00	534.55	Pull rope	Soft-Fiber Polyester
1131	E-50, E-51	41	RGS conduit	0.00	534.55	Pull rope	Soft-Fiber Polyester
1347	E-46	41	RGS conduit	0.00	534.55	Pull rope	Soft-Fiber Polyester
1348	E-46	41	RGS conduit	0.00	534.55	Pull rope	Soft-Fiber Polyester
1349	E-46	41	RGS conduit	0.00	534.55	Pull rope	Soft-Fiber Polyester
1350	E-46	41	RGS conduit	212.85	534.55	A-3001-2	3 + 1 gnd #6,#8, 600 V, RHH/RHW insulation
						Pull rope	Soft-Fiber Polyester
1351	E-46	41	RGS conduit	212.85	534.55	Pull rope	Soft-Fiber Polyester
						A-3001-2	3 + 1 gnd #6,#8, 600 V, RHH/RHW insulation
1352	E-46	41	RGS conduit	212.85	534.55	A-3001-2	3 + 1 gnd #6,#8, 600 V, RHH/RHW insulation
						Pull rope	Soft-Fiber Polyester
1353	E-46	41	RGS conduit	212.85	534.55	A-3001-2	3 + 1 gnd #6,#8, 600 V, RHH/RHW insulation
						Pull rope	Soft-Fiber Polyester
1354	E-46	41	RGS conduit	212.85	534.55	Pull rope	Soft-Fiber Polyester
						A-3001-2	3 + 1 gnd #6,#8, 600 V, RHH/RHW insulation
1355	E-46	41	RGS conduit	212.85	534.55	Pull rope	Soft-Fiber Polyester
						A-3001-2	3 + 1 gnd #6,#8, 600 V, RHH/RHW insulation
1356	E-46	41	RGS conduit	212.85	534.55	Pull rope	Soft-Fiber Polyester
						A-3001-2	3 + 1 gnd #6,#8, 600 V, RHH/RHW insulation
1357	E-46	41	RGS conduit	212.85	534.55	A-3001-2	3 + 1 gnd #6,#8, 600 V, RHH/RHW insulation
						Pull rope	Soft-Fiber Polyester
1358	E-47	41	RGS conduit	212.85	534.55	Pull rope	Soft-Fiber Polyester
						A-3001-2	3 + 1 gnd #6,#8, 600 V, RHH/RHW insulation
1359	E-47	41	RGS conduit	212.85	534.55	Pull rope	Soft-Fiber Polyester
						A-3002-2	3 + 1 gnd #6,#8, 600 V, RHH/RHW insulation
1360	E-47	41	RGS conduit	212.85	534.55	Pull rope	Soft-Fiber Polyester
						A-3002-2	3 + 1 gnd #6,#8, 600 V, RHH/RHW insulation

For continuation, see next sheet.

CONDUIT AND TRAY SCHEDULE

E-402

LAST REVISION 00-00-00
DATE PLOTTED => 3/17/2008
TIME PLOTTED => 5:32:13 PM

FOR REDUCED PLANS ORIGINAL SCALE IS IN MILLIMETERS 0 20 40 60 80

DGN FILE =>T:\13103\MS\pse\SAS Struc\CCO\SAS CCO42\04-0120f1_0357R01.dgn
USERNAME =>llorico

CU 04251

EA 0120F1

CONDUIT DATA

Conduit No	Reference	Size	Type	Total Fill (mm²)	Allowable Fill (mm²)	Included Cable No.	Conductor Type
1457	E-46	41	RGS conduit	0.00	534.55	Pull rope	Soft-Fiber Polyester
1458	E-47	41	RGS conduit	0.00	534.55	Pull rope	Soft-Fiber Polyester
1459	E-47	41	RGS conduit	0.00	534.55	Pull rope	Soft-Fiber Polyester
1460	E-47	41	RGS conduit	0.00	534.55	Pull rope	Soft-Fiber Polyester
1461	E-47	41	RGS conduit	0.00	534.55	Pull rope	Soft-Fiber Polyester
1462	E-47	41	RGS conduit	0.00	534.55	Pull rope	Soft-Fiber Polyester
1463	E-47	41	RGS conduit	0.00	534.55	Pull rope	Soft-Fiber Polyester
1464	E-47	41	RGS conduit	0.00	534.55	Pull rope	Soft-Fiber Polyester
1465	E-47	41	RGS conduit	324.29	534.55	A-3009-3	1-3/C + gnd #6, 600 V, EPR insulation
						Pull rope	Soft-Fiber Polyester
1466	E-47	41	RGS conduit	0.00	534.55	Pull rope	Soft-Fiber Polyester
1467	E-47	41	RGS conduit	324.29	534.55	A-3010-3	1-3/C #6 + gnd 600 V, RHH/RHW insulation
						Pull rope	Soft-Fiber Polyester
1468	E-47	41	RGS conduit	0.00	534.55	Pull rope	Soft-Fiber Polyester
1469	E-48	41	RGS conduit	0.00	534.55	Pull rope	Soft-Fiber Polyester
1470	E-48	41	RGS conduit	0.00	534.55	Pull rope	Soft-Fiber Polyester
1471	E-48	41	RGS conduit	0.00	534.55	Pull rope	Soft-Fiber Polyester
1472	E-48	41	RGS conduit	0.00	534.55	Pull rope	Soft-Fiber Polyester
1473	E-48	41	RGS conduit	0.00	534.55	Pull rope	Soft-Fiber Polyester
1474	E-48	41	RGS conduit	0.00	534.55	Pull rope	Soft-Fiber Polyester
1475	E-48	41	RGS conduit	0.00	534.55	Pull rope	Soft-Fiber Polyester
1476	E-48	41	RGS conduit	0.00	534.55	Pull rope	Soft-Fiber Polyester
1477	E-48	41	RGS conduit	0.00	534.55	Pull rope	Soft-Fiber Polyester
1478	E-48	41	RGS conduit	0.00	534.55	Pull rope	Soft-Fiber Polyester
1479	E-48	41	RGS conduit	0.00	534.55	Pull rope	Soft-Fiber Polyester
1481	E-49	41	RGS conduit	0.00	534.55	Pull rope	Soft-Fiber Polyester
1482	E-49	41	RGS conduit	0.00	534.55	Pull rope	Soft-Fiber Polyester
1483	E-49	41	RGS conduit	0.00	534.55	Pull rope	Soft-Fiber Polyester
1484	E-49	41	RGS conduit	0.00	534.55	Pull rope	Soft-Fiber Polyester
1485	E-49	41	RGS conduit	0.00	534.55	Pull rope	Soft-Fiber Polyester
1486	E-49	41	RGS conduit	0.00	534.55	Pull rope	Soft-Fiber Polyester
1487	E-49	41	RGS conduit	0.00	534.55	Pull rope	Soft-Fiber Polyester
1488	E-49	41	RGS conduit	0.00	534.55	Pull rope	Soft-Fiber Polyester
1489	E-49	41	RGS conduit	0.00	534.55	Pull rope	Soft-Fiber Polyester
1490	E-49	41	RGS conduit	0.00	534.55	Pull rope	Soft-Fiber Polyester
1491	E-49	41	RGS conduit	0.00	534.55	Pull rope	Soft-Fiber Polyester
1492	E-50	41	RGS conduit	0.00	534.55	Pull rope	Soft-Fiber Polyester
1493	E-50	41	RGS conduit	0.00	534.55	Pull rope	Soft-Fiber Polyester
1494	E-50	41	RGS conduit	0.00	534.55	Pull rope	Soft-Fiber Polyester

REQUEST FOR INFORMATION NOT ADDRESSED IN THIS CCO REMAIN IN FORCE

MARK	DATE	DESCRIPTIONS	MP EL BY	RR CH'D	42 CCO#
1	02/19/08	ELECTRICAL MODIFICATIONS			

REVISIONS

CONTRACT CHANGE ORDER NO. _____

SHEET _____ OF _____

REGISTERED PROFESSIONAL ENGINEER — MAXWELL FUMIO TAKATA — No. E 8651 — Exp. 9/30/2008 — ELECTRICAL — STATE OF CALIFORNIA

FOR REVISION ONLY

Caltrans Metric

DIST	COUNTY	ROUTE	KILOMETER POST TOTAL PROJECT	SHEET No	TOTAL SHEETS
04	SF	80	13.2/13.9	359R1	1204

Jens Erlingsson 12/19/02
REGISTERED ELECTRICAL ENGINEER DATE

REGISTERED PROFESSIONAL ENGINEER — JENS ERLINGSSON — No. 8249 — Exp. 9/30/06 — ELECTRICAL — STATE OF CALIFORNIA

12-6-04
PLANS APPROVAL DATE

PB POWER, Inc.
A Parsons Brinckerhoff Company
303 Second St., Suite 700N
San Francisco, CA 94107-1317

The State of California or its officers or agents shall not be responsible for the accuracy or completeness of electronic copies of this plan sheet.

Caltrans now has a web site! To get to the web site, go to http://www.dot.ca.gov

CONDUIT DATA

Conduit No	Reference	Size	Type	Total Fill (mm²)	Allowable Fill (mm²)	Included Cable No.	Conductor Type
1495	E-50	41	RGS conduit	0.00	534.55	Pull rope	Soft-Fiber Polyester
1496	E-50	41	RGS conduit	0.00	534.55	Pull rope	Soft-Fiber Polyester
1497	E-50	41	RGS conduit	0.00	534.55	Pull rope	Soft-Fiber Polyester
1498	E-50	41	RGS conduit	0.00	534.55	Pull rope	Soft-Fiber Polyester
1499	E-50	41	RGS conduit	0.00	534.55	Pull rope	Soft-Fiber Polyester
1513	E-46	41	RGS conduit	0.00	534.55	Pull rope	Soft-Fiber Polyester
1514	E-46	41	RGS conduit	0.00	534.55	Pull rope	Soft-Fiber Polyester
1515	E-46, E-47	41	RGS conduit	0.00	534.55	Pull rope	Soft-Fiber Polyester
1516	E-47	41	RGS conduit	0.00	534.55	Pull rope	Soft-Fiber Polyester
1517	E-47	41	RGS conduit	0.00	534.55	Pull rope	Soft-Fiber Polyester
1518	E-47	41	RGS conduit	0.00	534.55	Pull rope	Soft-Fiber Polyester
1519	E-47, E-48	41	RGS conduit	0.00	534.55	Pull rope	Soft-Fiber Polyester
1520	E-48	41	RGS conduit	0.00	534.55	Pull rope	Soft-Fiber Polyester
1521	E-48	41	RGS conduit	0.00	534.55	Pull rope	Soft-Fiber Polyester
1522	E-48	41	RGS conduit	0.00	534.55	Pull rope	Soft-Fiber Polyester
1523	E-49	41	RGS conduit	0.00	534.55	Pull rope	Soft-Fiber Polyester
1524	E-49	41	RGS conduit	0.00	534.55	Pull rope	Soft-Fiber Polyester
1525	E-49	41	RGS conduit	0.00	534.55	Pull rope	Soft-Fiber Polyester
1526	E-49	41	RGS conduit	0.00	534.55	Pull rope	Soft-Fiber Polyester
1527	E-50	41	RGS conduit	0.00	534.55	Pull rope	Soft-Fiber Polyester
1528	E-50	41	RGS conduit	0.00	534.55	Pull rope	Soft-Fiber Polyester
1529	E-50	41	RGS conduit	0.00	534.55	Pull rope	Soft-Fiber Polyester
1530	E-50	41	RGS conduit	0.00	534.55	Pull rope	Soft-Fiber Polyester
1531	E-51	41	RGS conduit	0.00	534.55	Pull rope	Soft-Fiber Polyester
~~1731~~							
1732	E-46	41	RGS conduit	0.00	534.55	Pull rope	Soft-Fiber Polyester
1733	E-46	41	RGS conduit	0.00	534.55	Pull rope	Soft-Fiber Polyester
1734	E-46	41	RGS conduit	0.00	534.55	Pull rope	Soft-Fiber Polyester

For continuation, see next sheet.

CONDUIT AND TRAY SCHEDULE

E-404

DATE	REVISED BY
8/02	AB

CALCULATED/DESIGNED BY: PBP
CHECKED BY: DATE 8/02

DESIGN OVERSIGHT: BEHZAD GOLEMOHAMMADI

STATE OF CALIFORNIA - DEPARTMENT OF TRANSPORTATION
Caltrans

FOR REDUCED PLANS ORIGINAL SCALE IS IN MILLIMETERS 0 20 40 60 80

DGN FILE =>T:\13103\MS\pse\SAS Struc\CCO\SAS CCO42\04-0120f1_0359R01.dgn
USERNAME =>llorico

CU 04251

EA 0120F1

LAST REVISION 00-00-00
DATE PLOTTED => 3/17/2008
TIME PLOTTED => 5:32:30 PM

CONDUIT DATA

Conduit No	Reference	Size	Type	Total Fill (mm²)	Allowable Fill (mm²)	Included Cable No.	Conductor Type
1735	E-46	41	RGS conduit	0.00	534.55	Pull rope	Soft-Fiber Polyester
1736	E-46	41	RGS conduit	0.00	534.55	Pull rope	Soft-Fiber Polyester
1737	E-47	41	RGS conduit	0.00	534.55	Pull rope	Soft-Fiber Polyester
1738	E-47	41	RGS conduit	126.88	534.55	Pull rope	Soft-Fiber Polyester
						UP105-3	1-2/C + gnd #10, 600 V, EPR insulation
1739	E-47	41	RGS conduit	126.88	534.55	UP105-3	1-2/C + gnd #10, 600 V, EPR insulation
						Pull rope	Soft-Fiber Polyester
1740	E-47	41	RGS conduit	126.88	534.55	UP105-3	1-2/C + gnd #10, 600 V, EPR insulation
						Pull rope	Soft-Fiber Polyester
1741	E-47	41	RGS conduit	126.88	534.55	UP105-3	1-2/C + gnd #10, 600 V, EPR insulation
						Pull rope	Soft-Fiber Polyester
1742	E-47	41	RGS conduit	0.00	534.55	Pull rope	Soft-Fiber Polyester
1743	E-47	41	RGS conduit	0.00	534.55	Pull rope	Soft-Fiber Polyester
1744	E-47	41	RGS conduit	0.00	534.55	Pull rope	Soft-Fiber Polyester
1745	E-47	41	RGS conduit	440.31	534.55	UP106-3	1-2/C + gnd #8, 600 V, EPR insulation
						A-3010-2	3 + 1 gnd #6,#8, 600 V, RHH/RHW insulation
						Pull rope	Soft-Fiber Polyester
1746	E-48	41	RGS conduit	440.31	534.55	Pull rope	Soft-Fiber Polyester
						A-3010-2	3 + 1 gnd #6,#8, 600 V, RHH/RHW insulation
						UP106-3	1-2/C + gnd #8, 600 V, EPR insulation
1747	E-48	41	RGS conduit	0.00	534.55	Pull rope	Soft-Fiber Polyester
1748	E-48	41	RGS conduit	0.00	534.55	Pull rope	Soft-Fiber Polyester
1749	E-48	41	RGS conduit	0.00	534.55	Pull rope	Soft-Fiber Polyester
1750	E-48	41	RGS conduit	0.00	534.55	Pull rope	Soft-Fiber Polyester
1751	E-49	41	RGS conduit	0.00	534.55	Pull rope	Soft-Fiber Polyester
1752	E-49	41	RGS conduit	0.00	534.55	Pull rope	Soft-Fiber Polyester
1753	E-49	41	RGS conduit	0.00	534.55	Pull rope	Soft-Fiber Polyester
1754	E-49	41	RGS conduit	0.00	534.55	Pull rope	Soft-Fiber Polyester
1755	E-49	41	RGS conduit	0.00	534.55	Pull rope	Soft-Fiber Polyester
1756	E-50	41	RGS conduit	0.00	534.55	Pull rope	Soft-Fiber Polyester
1757	E-50	41	RGS conduit	0.00	534.55	Pull rope	Soft-Fiber Polyester
1758	E-50	41	RGS conduit	0.00	534.55	Pull rope	Soft-Fiber Polyester
1759	E-50	41	RGS conduit	0.00	534.55	Pull rope	Soft-Fiber Polyester
1760	E-50	41	RGS conduit	49.21	534.55	Pull rope	Soft-Fiber Polyester
						UP108-3A	2 + 1 gnd #12,#12, 600 V, RHH/RHW insulation
1761	E-50	41	RGS conduit	49.21	534.55	UP108-3A	2 + 1 gnd #12,#12, 600 V, RHH/RHW insulation
						Pull rope	Soft-Fiber Polyester
1762	E-50	41	RGS conduit	373.50	534.55	1106	1-3/C + gnd #6, 600 V, EPR insulation
						UP108-3A	2 + 1 gnd #12,#12, 600 V, RHH/RHW insulation
						Pull rope	Soft-Fiber Polyester
1763	E-51	41	RGS conduit	324.29	534.55	Pull rope	Soft-Fiber Polyester
						1106	1-3/C + gnd #6, 600 V, EPR insulation
1764	E-51	41	RGS conduit	0.00	534.55	Pull rope	Soft-Fiber Polyester
1765	E-51	41	RGS conduit	324.29	534.55	1106	1-3/C + gnd #6, 600 V, EPR insulation
						Pull rope	Soft-Fiber Polyester

REQUEST FOR INFORMATION NOT ADDRESSED IN THIS CCO REMAIN IN FORCE

MARK	DATE	DESCRIPTIONS	BY	CH'D	CCO#
		REVISIONS			
1	02/19/08	ELECTRICAL MODIFICATIONS	MP EL	RR	42

CONTRACT CHANGE ORDER NO. _____
SHEET _____ OF _____

REGISTERED PROFESSIONAL ENGINEER — MAXWELL FUMIO TAKATA — No. E 8651 — Exp. 9/30/2008 ELECTRICAL — STATE OF CALIFORNIA

FOR REVISION ONLY

Caltrans Metric

DIST	COUNTY	ROUTE	KILOMETER POST TOTAL PROJECT	SHEET No	TOTAL SHEETS
04	SF	80	13.2/13.9	360R1	1204

Jens Erlingsson 12/19/02
REGISTERED ELECTRICAL ENGINEER DATE

REGISTERED PROFESSIONAL ENGINEER — JENS ERLINGSSON — No. 8249 — Exp. 9/30/06 ELECTRICAL — STATE OF CALIFORNIA

12-6-04
PLANS APPROVAL DATE

PB POWER, Inc.
A Parsons Brinckerhoff Company
303 Second St., Suite 700N
San Francisco, CA 94107-1317

The State of California or its officers or agents shall not be responsible for the accuracy or completeness of electronic copies of this plan sheet.

Caltrans now has a web site! To get to the web site, go to http://www.dot.ca.gov

CONDUIT DATA

Conduit No	Reference	Size	Type	Total Fill (mm²)	Allowable Fill (mm²)	Included Cable No.	Conductor Type
1766	E-79	53	RGS-PVC coated conduit	754.18	879.42	Pull rope	Soft-Fiber Polyester
						1115	1-3/C + gnd #1/0, 600 V, EPR insulation
1767	E-79	53	RGS-PVC coated conduit	147.25	879.42	Pull rope	Soft-Fiber Polyester
						1115-2	1-3/C #16, 600 V, EPR insulation
						1115-1	1-3/C #14, 600 V, EPR insulation
1768	E-120, E-101	78	RGS-PVC coated conduit	882.89	1935.24	Pull rope	Soft-Fiber Polyester
						1117	1-3/C + gnd #2/0, 600 V, EPR insulation
1769	E-120, E-101	27	RGS-PVC coated conduit	147.25	229.03	1117-2	1-3/C #16, 600 V, EPR insulation
						Pull rope	Soft-Fiber Polyester
						1117-1	1-3/C #14, 600 V, EPR insulation
~~1831~~							
1832	E-46	41	RGS conduit	474.91	534.55	A-1035-1	1-3/C + gnd #6, 600V, EPR insulation
						UP104-3A	2 + 1gnd #12,#12, 600 V, RHH/RHW insulation
						Pull rope	Soft-Fiber Polyester
						S-1031-1	1-3/C + gnd #2, 600V, EPR insulation
1833	E-46	41	RGS conduit	474.91	534.55	S-1031-1	1-3/C + gnd #2, 600V, EPR insulation
						A-1035-1	1-3/C + gnd #6, 600V, EPR insulation
						UP104-3A	2 + 1gnd #12,#12, 600 V, RHH/RHW insulation
						Pull rope	Soft-Fiber Polyester
1834	E-46	41	RGS conduit	474.91	534.55	UP104-3A	2 + 1 gnd #12,#12, 600 V, RHH/RHW insulation
						A-1035-1	1-3/C + gnd #6, 600V, EPR insulation
						Pull rope	Soft-Fiber Polyester
						S-1031-1	1-3/C + gnd #2, 600V, EPR insulation
1835	E-46	41	RGS conduit	0.00	534.55	Pull rope	Soft-Fiber Polyester
1836	E-46, E-47	41	RGS conduit	0.00	534.55	Pull rope	Soft-Fiber Polyester
1837	E-47	41	RGS conduit	0.00	534.55	Pull rope	Soft-Fiber Polyester
1838	E-47	41	RGS conduit	212.85	534.55	A-3009-2	3 + 1 gnd #6,#8, 600 V, RHH/RHW insulation
						Pull rope	Soft-Fiber Polyester
1839	E-47	41	RGS conduit	212.85	534.55	Pull rope	Soft-Fiber Polyester
						A-3009-2	3 + 1 gnd #6,#8, 600 V, RHH/RHW insulation
1840	E-47	41	RGS conduit	262.06	534.55	A-3009-2	3 + 1 gnd #6,#8, 600 V, RHH/RHW insulation
						UP105-4A	2 + 1gnd #12,#12, 600 V, RHH/RHW insulation
						Pull rope	Soft-Fiber Polyester
1841	E-47	41	RGS conduit	262.06	534.55	UP105-4A	2 + 1gnd #12,#12, 600 V, RHH/RHW insulation
						Pull rope	Soft-Fiber Polyester
						A-3009-2	3 + 1 gnd #6,#8, 600 V, RHH/RHW insulation
1842	E-47	41	RGS conduit	212.85	534.55	Pull rope	Soft-Fiber Polyester
						A-3009-2	3 + 1 gnd #6,#8, 600 V, RHH/RHW insulation

For continuation, see next sheet.

CONDUIT AND TRAY SCHEDULE

E-405

REVISED BY	DATE REVISED
DATE 8/02	8/02
PBP	AB
CALCULATED/ DESIGNED BY	CHECKED BY

DESIGN OVERSIGHT — BEHZAD GOLEMOHAMMADI

STATE OF CALIFORNIA - DEPARTMENT OF TRANSPORTATION — Caltrans

LAST REVISION 00-00-00 — DATE PLOTTED => 3/17/2008 TIME PLOTTED => 5:32:47 PM

FOR REDUCED PLANS ORIGINAL SCALE IS IN MILLIMETERS 0 20 40 60 80

DGN FILE =>T:\13103\MS\pse\SAS Struc\CCO\SAS CCO42\04-0120f1_0360R01.dgn
USERNAME =>llorico

CU 04251 — EA 0120F1

CONDUIT DATA

Conduit No	Reference	Size	Type	Total Fill (mm²)	Allowable Fill (mm²)	Included Cable No.	Conductor Type
1843	E-47	41	RGS conduit	0.00	534.55	Pull rope	Soft-Fiber Polyester
1844	E-47	41	RGS conduit	0.00	534.55	Pull rope	Soft-Fiber Polyester
1845	E-47	41	RGS conduit	0.00	534.55	Pull rope	Soft-Fiber Polyester
1846	E-48	41	RGS conduit	0.00	534.55	Pull rope	Soft-Fiber Polyester
1847	E-48	41	RGS conduit	0.00	534.55	Pull rope	Soft-Fiber Polyester
1848	E-48	41	RGS conduit	0.00	534.55	Pull rope	Soft-Fiber Polyester
1849	E-48	41	RGS conduit	0.00	534.55	Pull rope	Soft-Fiber Polyester
1850	E-48	41	RGS conduit	0.00	534.55	Pull rope	Soft-Fiber Polyester
1851	E-49	41	RGS conduit	0.00	534.55	Pull rope	Soft-Fiber Polyester
1852	E-49	41	RGS conduit	0.00	534.55	Pull rope	Soft-Fiber Polyester
1853	E-49	41	RGS conduit	0.00	534.55	Pull rope	Soft-Fiber Polyester
1854	E-49	41	RGS conduit	262.06	534.55	UP107-3A	2 + 1 gnd #12,#12, 600 V, RHH/RHW insulation
						Pull rope	Soft-Fiber Polyester
1855	E-49	41	RGS conduit	262.06	534.55	UP107-3A	2 + 1 gnd #12,#12, 600 V, RHH/RHW insulation
						Pull rope	Soft-Fiber Polyester
1856	E-50	41	RGS conduit	262.06	534.55	UP107-3A	2 + 1 gnd #12,#12, 600 V, RHH/RHW insulation
						Pull rope	Soft-Fiber Polyester
1857	E-50	41	RGS conduit	162.40	534.55	UP107-3A	2 + 1 gnd #12,#12, 600 V, RHH/RHW insulation
						Pull rope	Soft-Fiber Polyester
1858	E-50	41	RGS conduit	0.00	534.55	Pull rope	Soft-Fiber Polyester
1859	E-50	41	RGS conduit	0.00	534.55	Pull rope	Soft-Fiber Polyester
1860	E-50	41	RGS conduit	0.00	534.55	Pull rope	Soft-Fiber Polyester
1861	E-50	41	RGS conduit	265.64	534.55	Pull rope	Soft-Fiber Polyester
						S-1032-2	3 + 1 gnd #6, #8, 600 V, RHH/RHW insulation
1862	E-50, E-51	41	RGS conduit	265.64	534.55	Pull rope	Soft-Fiber Polyester
						S-1032-2	3 + 1 gnd #6, #8, 600 V, RHH/RHW insulation
1863	E-51	41	RGS conduit	265.64	534.55	Pull rope	Soft-Fiber Polyester
						S-1032-S	3 + 1 gnd #6, #8, 600 V, RHH/RHW insulation
1864	E-51	41	RGS conduit	0.00	534.55	Pull rope	Soft-Fiber Polyester
1865	E-51	41	RGS conduit	0.00	534.55	Pull rope	Soft-Fiber Polyester
1900	E-50	41	RGS conduit	0.00	534.55	Pull rope	Soft-Fiber Polyester
1901	E-50	41	RGS conduit	0.00	534.55	Pull rope	Soft-Fiber Polyester
1902	E-50	41	RGS conduit	0.00	534.55	Pull rope	Soft-Fiber Polyester
1903	E-51	41	RGS conduit	0.00	534.55	Pull rope	Soft-Fiber Polyester
1904	E-51	41	RGS conduit	0.00	534.55	Pull rope	Soft-Fiber Polyester

REQUEST FOR INFORMATION NOT ADDRESSED IN THIS CCO REMAIN IN FORCE

MARK	DATE	DESCRIPTIONS	BY	CH'D	CCO#
		REVISIONS			
1	02/19/08	ELECTRICAL MODIFICATIONS	MP EL	RR	42

CONTRACT CHANGE ORDER NO. _____
SHEET _____ OF _____

REGISTERED PROFESSIONAL ENGINEER — MAXWELL FUMIO TAKATA — No. E 8651 — Exp. 9/30/2008 ELECTRICAL — STATE OF CALIFORNIA

FOR REVISION ONLY

Caltrans Metric

DIST	COUNTY	ROUTE	KILOMETER POST TOTAL PROJECT	SHEET No	TOTAL SHEETS
04	SF	80	13.2/13.9	361R1	1204

Jens Erlingsson 12/19/02
REGISTERED ELECTRICAL ENGINEER DATE

REGISTERED PROFESSIONAL ENGINEER — JENS ERLINGSSON — No. 8249 — Exp. 9/30/06 ELECTRICAL — STATE OF CALIFORNIA

12-6-04
PLANS APPROVAL DATE

PB POWER, Inc.
A Parsons Brinckerhoff Company
303 Second St., Suite 700N
San Francisco, CA 94107-1317

The State of California or its officers or agents shall not be responsible for the accuracy or completeness of electronic copies of this plan sheet.

Caltrans now has a web site! To get to the web site, go to http://www.dot.ca.gov

CONDUIT DATA

Conduit No	Reference	Size	Type	Total Fill (mm²)	Allowable Fill (mm²)	Included Cable No.	Conductor Type
1905	E-51	41	RGS conduit	0.00	534.55	Pull rope	Soft-Fiber Polyester
1906	E-51	41	RGS conduit	0.00	534.55	Pull rope	Soft-Fiber Polyester
1907	E-51	41	RGS conduit	0.00	534.55	Pull rope	Soft-Fiber Polyester
1908	E-51	41	RGS conduit	0.00	534.55	Pull rope	Soft-Fiber Polyester
1950	E-50	41	RGS conduit	227.46	534.55	Pull rope	Soft-Fiber Polyester
						UP108-2	1-2/C + gnd #8, 600 V, EPR insulation
1951	E-50	41	RGS conduit	0.00	534.55	Pull rope	Soft-Fiber Polyester
1952	E-50	41	RGS conduit	0.00	534.55	Pull rope	Soft-Fiber Polyester
1953	E-51	41	RGS conduit	0.00	534.55	Pull rope	Soft-Fiber Polyester
1954	E-51	41	RGS conduit	0.00	534.55	Pull rope	Soft-Fiber Polyester
1955	E-51	41	RGS conduit	0.00	534.55	Pull rope	Soft-Fiber Polyester
1956	E-51	41	RGS conduit	0.00	534.55	Pull rope	Soft-Fiber Polyester
1957	E-51	41	RGS conduit	0.00	534.55	Pull rope	Soft-Fiber Polyester
1958	E-51	41	RGS conduit	0.00	534.55	Pull rope	Soft-Fiber Polyester
1T13	E-96, E-101	305	152.4 mm siderail ladder tray	2780.99	19354.80	1391	3-1/C #4/0 + 1/C #1/0 gnd, 15 kV, EPR insulation
						Pull rope	Soft-Fiber Polyester
1T14	E-128, E-19	305	152.4 mm siderail ladder tray	2780.99	8387.08	1391	3-1/C #4/0 + 1/C #1/0 gnd, 15 kV, EPR insulation
						Pull rope	Soft-Fiber Polyester
1T23	E-96, E-101	610	152.4 mm siderail ladder tray	14012.37	18064.48	UP105-4	1-2/C + gnd #8, 600 V, EPR insulation
						A-3010-1	1-3/C + gnd #2, 600 V, EPR insulation
						1115-2	1-3/C #16, 600 V, EPR insulation
						S-1031-1	1-3/C + gnd #2, 600 V, EPR insulation
						1115-1	1-3/C #14, 600 V, EPR insulation
						2201-1	1-2/C + gnd #8, 600 V, EPR insulation
						A-3009-3	1-3/C + gnd #6, 600 V, EPR insulation
						UP105-2	1-2/C + gnd #8, 600 V, EPR insulation
						1106	1-3/C + gnd #6, 600 V, EPR insulation
						S-3056-5	1-4/C #14, 600 V, EPR insulation
						S-3056-7	1-2/C #14, 600 V, EPR insulation
						S-3056-8	1-4/C #14, 600 V, EPR insulation
						Pull rope	Soft-Fiber Polyester
						A-3010-3	1-3/C #6 + gnd 600 V, RHH/RHW insulation
						S-3051-1	1-3/C + gnd #4, 600 V, EPR insulation
						UP108-3	1-2/C + gnd #8, 600 V, EPR insulation
						1255-1	1-3/C #16 ,600V, EPR insulation
						A-3001-1	1-3/C + gnd #4, 600 V, EPR insulation
						A-3012-1	1-3/C + gnd #2, 600 V, EPR insulation
						A-3013-1	1-3/C + gnd #2, 600 V, EPR insulation
						S-3022-1	1-3/C + gnd #2, 600 V, EPR insulation
						A-3002-1	1-3/C + gnd #4, 600 V, EPR insulation
						UP107-6	1-2/C + gnd #8, 600 V, EPR insulation

For continuation, see next sheet.

CONDUIT AND TRAY SCHEDULE

E-406

CALCULATED/DESIGNED BY: CHECKED BY
PBP: AB
DATE 8/02: 8/02
REVISED BY: DATE REVISED

DESIGN OVERSIGHT
BEHZAD GOLEMOHAMMADI

STATE OF CALIFORNIA - DEPARTMENT OF TRANSPORTATION
Caltrans

LAST REVISION 00-00-00
DATE PLOTTED => 3/17/2008
TIME PLOTTED => 5:33:11 PM

FOR REDUCED PLANS ORIGINAL SCALE IS IN MILLIMETERS 0 20 40 60 80

DGN FILE =>T:\13103\MS\pse\SAS Struc\CCO\SAS CC042\04-0120f1_0361R01.dgn
USERNAME =>llorico

CU 04251 EA 0120F1

CONDUIT DATA

Conduit No	Reference	Size	Type	Total Fill (mm²)	Allowable Fill (mm²)	Included Cable No.	Conductor Type
2551	E-139	41	RGS conduit	212.85	534.55	LP223-2,4A	3 + 1 gnd #6,#8, 600 V, RHH/RHW insulation
2552	E-139	41	RGS conduit	212.85	534.55	LP223-2,4A	3 + 1 gnd #6,#8, 600 V, RHH/RHW insulation
2553	E-139	41	RGS conduit	212.85	534.55	LP223-2,4A	3 + 1 gnd #6,#8, 600 V, RHH/RHW insulation
2554	E-139	41	RGS conduit	212.85	534.55	LP223-2,4A	3 + 1 gnd #6,#8, 600 V, RHH/RHW insulation
2555	E-139	41	RGS conduit	212.85	534.55	LP223-2,4A	3 + 1 gnd #6,#8, 600 V, RHH/RHW insulation
2556	E-139	41	RGS conduit	212.85	534.55	LP223-6,8A	3 + 1 gnd #6,#8, 600 V, RHH/RHW insulation
2557	E-139	41	RGS conduit	212.85	534.55	LP223-6,8A	3 + 1 gnd #6,#8, 600 V, RHH/RHW insulation
2558	E-140	41	RGS conduit	212.85	534.55	LP223-6,8A	3 + 1 gnd #6,#8, 600 V, RHH/RHW insulation
2559	E-140	41	RGS conduit	212.85	534.55	LP223-6,8A	3 + 1 gnd #6,#8, 600 V, RHH/RHW insulation
2560	E-140	41	RGS conduit	212.85	534.55	LP223-6,8A	3 + 1 gnd #6,#8, 600 V, RHH/RHW insulation
2561	E-140	41	RGS conduit	212.85	534.55	LP223-6,8A	3 + 1 gnd #6,#8, 600 V, RHH/RHW insulation
2562	E-140	41	RGS conduit	212.85	534.55	LP223-6,8A	3 + 1 gnd #6,#8, 600 V, RHH/RHW insulation
2563	E-140	41	RGS conduit	212.85	534.55	LP223-6,8A	3 + 1 gnd #6,#8, 600 V, RHH/RHW insulation
2611	E-135	41	RGS conduit	0.00	534.55	Pull rope	Soft-Fiber Polyester
2612	E-135	41	RGS conduit	0.00	534.55	Pull rope	Soft-Fiber Polyester
2613	E-135	41	RGS conduit	0.00	534.55	Pull rope	Soft-Fiber Polyester
2614	E-136	41	RGS conduit	0.00	534.55	Pull rope	Soft-Fiber Polyester
2615	E-136	41	RGS conduit	0.00	534.55	Pull rope	Soft-Fiber Polyester
2616	E-136	41	RGS conduit	0.00	534.55	Pull rope	Soft-Fiber Polyester
2617	E-136	41	RGS conduit	0.00	534.55	Pull rope	Soft-Fiber Polyester
2618	E-137	41	RGS conduit	0.00	534.55	Pull rope	Soft-Fiber Polyester
2619	E-137	41	RGS conduit	0.00	534.55	Pull rope	Soft-Fiber Polyester
2620	E-137	41	RGS conduit	0.00	534.55	Pull rope	Soft-Fiber Polyester
2621	E-137	41	RGS conduit	0.00	534.55	Pull rope	Soft-Fiber Polyester
2622	E-138	41	RGS conduit	0.00	534.55	Pull rope	Soft-Fiber Polyester
2623	E-138	41	RGS conduit	0.00	534.55	Pull rope	Soft-Fiber Polyester
2624	E-138	41	RGS conduit	0.00	534.55	Pull rope	Soft-Fiber Polyester
2625	E-138	41	RGS conduit	0.00	534.55	Pull rope	Soft-Fiber Polyester
2626	E-139	41	RGS conduit	0.00	534.55	Pull rope	Soft-Fiber Polyester
2627	E-139	41	RGS conduit	0.00	534.55	Pull rope	Soft-Fiber Polyester
2628	E-139	41	RGS conduit	0.00	534.55	Pull rope	Soft-Fiber Polyester
2629	E-139	41	RGS conduit	0.00	534.55	Pull rope	Soft-Fiber Polyester
2630	E-139	41	RGS conduit	0.00	534.55	Pull rope	Soft-Fiber Polyester
2631	E-140	41	RGS conduit	0.00	534.55	Pull rope	Soft-Fiber Polyester
2637	E-138	41	RGS conduit	212.85	534.55	Pull rope	Soft-Fiber Polyester
2638	E-138	41	RGS conduit	212.85	534.55	A-2013-2	3 + 1 gnd #6,#8, 600 V, RHH/RHW insulation
2639	E-138	41	RGS conduit	212.85	534.55	A-2013-2	3 + 1 gnd #6,#8, 600 V, RHH/RHW insulation
2640	E-138	41	RGS conduit	212.85	534.55	A-2013-2	3 + 1 gnd #6,#8, 600 V, RHH/RHW insulation
2641	E-138	41	RGS conduit	212.85	534.55	A-2013-2	3 + 1 gnd #6,#8, 600 V, RHH/RHW insulation

REQUEST FOR INFORMATION NOT ADDRESSED IN THIS CCO REMAIN IN FORCE

MARK	DATE	DESCRIPTIONS	MP EL	RR BY	42 CH'D	CCO#
1	02/19/08	ELECTRICAL MODIFICATIONS				

REVISIONS

CONTRACT CHANGE ORDER NO. _____
SHEET _____ OF _____

REGISTERED PROFESSIONAL ENGINEER — MAXWELL FUMIO TAKATA — No. E 8651 — Exp. 9/30/2008 ELECTRICAL — STATE OF CALIFORNIA

FOR REVISION ONLY

Caltrans Metric

DIST	COUNTY	ROUTE	KILOMETER POST TOTAL PROJECT	SHEET No	TOTAL SHEETS
04	SF	80	13.2/13.9	370R1	1204

Jens Erlingsson 12/19/02
REGISTERED ELECTRICAL ENGINEER DATE

REGISTERED PROFESSIONAL ENGINEER — JENS ERLINGSSON — No. 8249 — Exp. 9/30/06 ELECTRICAL — STATE OF CALIFORNIA

12-6-04
PLANS APPROVAL DATE

PB POWER, Inc.
A Parsons Brinckerhoff Company
303 Second St., Suite 700N
San Francisco, CA 94107-1317

The State of California or its officers or agents shall not be responsible for the accuracy or completeness of electronic copies of this plan sheet.

Caltrans now has a web site! To get to the web site, go to: http://www.dot.ca.gov

CONDUIT DATA

Conduit No	Reference	Size	Type	Total Fill (mm²)	Allowable Fill (mm²)	Included Cable No.	Conductor Type
2642	E-138	41	RGS conduit	212.85	534.55	A-2013-2	3 + 1 gnd #6,#8, 600 V, RHH/RHW insulation
2643	E-138	41	RGS conduit	212.85	534.55	A-2013-2	3 + 1 gnd #6,#8, 600 V, RHH/RHW insulation
2644	E-138	41	RGS conduit	212.85	534.55	A-2013-2	3 + 1 gnd #6,#8, 600 V, RHH/RHW insulation
2645	E-138	41	RGS conduit	212.85	534.55	A-2013-2	3 + 1 gnd #6,#8, 600 V, RHH/RHW insulation
2646	E-138	41	RGS conduit	212.85	534.55	A-2013-2	3 + 1 gnd #6,#8, 600 V, RHH/RHW insulation
2647	E-139	41	RGS conduit	212.85	534.55	A-2013-2	3 + 1 gnd #6,#8, 600 V, RHH/RHW insulation
2648	E-139	41	RGS conduit	212.85	534.55	A-2013-2	3 + 1 gnd #6,#8, 600 V, RHH/RHW insulation
2649	E-139	41	RGS conduit	212.85	534.55	A-2013-2	3 + 1 gnd #6,#8, 600 V, RHH/RHW insulation
2650	E-139	41	RGS conduit	212.85	534.55	A-2014-2	3 + 1 gnd #6,#8, 600 V, RHH/RHW insulation
2651	E-139	41	RGS conduit	212.85	534.55	A-2014-2	3 + 1 gnd #6,#8, 600 V, RHH/RHW insulation
2652	E-139	41	RGS conduit	212.85	534.55	A-2014-2	3 + 1 gnd #6,#8, 600 V, RHH/RHW insulation
2653	E-139	41	RGS conduit	212.85	534.55	A-2014-2	3 + 1 gnd #6,#8, 600 V, RHH/RHW insulation
2654	E-139	41	RGS conduit	212.85	534.55	A-2014-2	3 + 1 gnd #6,#8, 600 V, RHH/RHW insulation
2655	E-139	41	RGS conduit	212.85	534.55	A-2014-2	3 + 1 gnd #6,#8, 600 V, RHH/RHW insulation
2656	E-139	41	RGS conduit	212.85	534.55	A-2014-2	3 + 1 gnd #6,#8, 600 V, RHH/RHW insulation
2657	E-139	41	RGS conduit	212.85	534.55	A-2014-2	3 + 1 gnd #6,#8, 600 V, RHH/RHW insulation
2658	E-140	41	RGS conduit	212.85	534.55	A-2014-2	3 + 1 gnd #6,#8, 600 V, RHH/RHW insulation
2659	E-140	41	RGS conduit	212.85	534.55	A-2014-2	3 + 1 gnd #6,#8, 600 V, RHH/RHW insulation
2660	E-140	41	RGS conduit	212.85	534.55	A-2014-2	3 + 1 gnd #6,#8, 600 V, RHH/RHW insulation
2661	E-140	41	RGS conduit	212.85	534.55	A-2014-2	3 + 1 gnd #6,#8, 600 V, RHH/RHW insulation
2662	E-140	41	RGS conduit	212.85	534.55	A-2014-2	3 + 1 gnd #6,#8, 600 V, RHH/RHW insulation
2663	E-140	41	RGS conduit	212.85	534.55	A-2014-2	3 + 1 gnd #6,#8, 600 V, RHH/RHW insulation
2664	E-135	41	RGS conduit	212.85	534.55	LP219-6,8A	3 + 1 gnd #6,#8, 600 V, RHH/RHW insulation
1 ~~2757~~							
2758	E-135	41	RGS conduit, PVC Coated				
2759	E-135	41	RGS conduit	440.31	534.55	A-3031-2	3 + 1 gnd #6,#8, 600 V, RHH/RHW insulation
						UP205-6	1-2/C + gnd #8,600 V, EPR insulation
						Pull rope	Soft-Fiber Polyester

For continuation, see next sheet.

CONDUIT AND TRAY SCHEDULE

E-415

CALCULATED/DESIGNED BY | CHECKED BY
PBP | AB
DATE 8/02 | 8/02
REVISED BY | DATE REVISED

DESIGN OVERSIGHT
BEHZAD GOLEMOHAMMADI

STATE OF CALIFORNIA - DEPARTMENT OF TRANSPORTATION
Caltrans

DATE PLOTTED => 3/17/2008
TIME PLOTTED => 5:33:30 PM
LAST REVISION 00-00-00

FOR REDUCED PLANS ORIGINAL SCALE IS IN MILLIMETERS 0 20 40 60 80

DGN FILE =>T:\13103\MS\pse\SAS Struc\CCO\SAS CCO42\04-0120f1_037OR01.dgn
USERNAME =>llorico

CU 04251

EA 0120F1

CONDUIT DATA

Conduit No	Reference	Size	Type	Total Fill (mm²)	Allowable Fill (mm²)	Included Cable No.	Conductor Type
2760	E-135	41	RGS conduit	440.31	534.55	A-3031-2	3 + 1 gnd #6,#8, 600 V, RHH/RHW insulation
						UP205-6	1-2/C + gnd #8,600 V, EPR insulation
						Pull rope	Soft-Fiber Polyester
2761	E-135	41	RGS conduit	425.70	534.55	LP219-2,4A	3 + 1 gnd #6,#8, 600 V, RHH/RHW insulation
						Pull rope	Soft-Fiber Polyester
						A-3031-2	3 + 1 gnd #6,#8, 600 V, RHH/RHW insulation
2762	E-135	41	RGS conduit	212.85	534.55	Pull rope	Soft-Fiber Polyester
						A-3031-2	3 + 1 gnd #6,#8, 600 V, RHH/RHW insulation
2763	E-135	41	RGS conduit	212.85	534.55	Pull rope	Soft-Fiber Polyester
						A-3031-2	3 + 1 gnd #6,#8, 600 V, RHH/RHW insulation
2764	E-135	41	RGS conduit	212.85	534.55	Pull rope	Soft-Fiber Polyester
						A-3031-2	3 + 1 gnd #6,#8, 600 V, RHH/RHW insulation
2765	E-135	41	RGS conduit	212.85	534.55	Pull rope	Soft-Fiber Polyester
						A-3031-2	3 + 1 gnd #6,#8, 600 V, RHH/RHW insulation
2766	E-136	41	RGS conduit	212.85	534.55	Pull rope	Soft-Fiber Polyester
						A-3031-2	3 + 1 gnd #6,#8, 600 V, RHH/RHW insulation
2767	E-136	41	RGS conduit	0.00	534.55	Pull rope	Soft-Fiber Polyester
2768	E-136	41	RGS conduit	212.85	534.55	Pull rope	Soft-Fiber Polyester
						A-3032-2	3 + 1 gnd #6,#8, 600 V, RHH/RHW insulation
2769	E-136	41	RGS conduit	212.85	534.55	Pull rope	Soft-Fiber Polyester
						A-3032-2	3 + 1 gnd #6,#8, 600 V, RHH/RHW insulation
2770	E-136	41	RGS conduit	212.85	534.55	Pull rope	Soft-Fiber Polyester
						A-3032-2	3 + 1 gnd #6,#8, 600 V, RHH/RHW insulation
2771	E-136	41	RGS conduit	212.85	534.55	A-3032-2	3 + 1 gnd #6,#8, 600 V, RHH/RHW insulation
						Pull rope	Soft-Fiber Polyester
2772	E-136	41	RGS conduit	212.85	534.55	Pull rope	Soft-Fiber Polyester
						A-3032-2	3 + 1 gnd #6,#8, 600 V, RHH/RHW insulation
2773	E-136	41	RGS conduit	212.85	534.55	Pull rope	Soft-Fiber Polyester
						A-3033-2	3 + 1 gnd #6,#8, 600 V, RHH/RHW insulation
2774	E-136	53	RGS conduit	537.14	681.55	Pull rope	Soft-Fiber Polyester
						A-3040-3	1-3/C + gnd #6, 600 V, EPR insulation
						A-3033-2	3 + 1 gnd #6,#8, 600 V, RHH/RHW insulation
2775	E-136	53	RGS conduit	537.14	681.55	A-3033-2	3 + 1 gnd #6,#8, 600 V, RHH/RHW insulation
						A-3040-3	1-3/C + gnd #6, 600 V, EPR insulation
						Pull rope	Soft-Fiber Polyester
2776	E-136	41	RGS conduit	212.85	534.55	A-3033-2	3 + 1 gnd #6,#8, 600 V, RHH/RHW insulation
						Pull rope	Soft-Fiber Polyester
2777	E-136	41	RGS conduit	212.85	534.55	Pull rope	Soft-Fiber Polyester
						A-3033-2	3 + 1 gnd #6,#8, 600 V, RHH/RHW insulation
2778	E-137	41	RGS conduit	212.85	534.55	Pull rope	Soft-Fiber Polyester
						A-3033-2	3 + 1 gnd #6,#8, 600 V, RHH/RHW insulation
2779	E-137	41	RGS conduit	0.00	534.55	Pull rope	Soft-Fiber Polyester
2780	E-137	41	RGS conduit	425.70	534.55	LP221-2,4A	3 + 1 gnd #6,#8, 600 V, RHH/RHW insulation
						A-3034-2	3 + 1 gnd #6,#8, 600 V, RHH/RHW insulation
						Pull rope	Soft-Fiber Polyester
2781	E-137	41	RGS conduit	212.85	534.55	Pull rope	Soft-Fiber Polyester
						A-3034-2	3 + 1 gnd #6,#8, 600 V, RHH/RHW insulation
2782	E-137	41	RGS conduit	212.85	534.55	Pull rope	Soft-Fiber Polyester
						A-3034-2	3 + 1 gnd #6,#8, 600 V, RHH/RHW insulation
2783	E-137	41	RGS conduit	212.85	534.55	Pull rope	Soft-Fiber Polyester
						A-3034-2	3 + 1 gnd #6,#8, 600 V, RHH/RHW insulation
2784	E-137	41	RGS conduit	212.85	534.55	Pull rope	Soft-Fiber Polyester
						A-3034-2	3 + 1 gnd #6,#8, 600 V, RHH/RHW insulation

REQUEST FOR INFORMATION NOT ADDRESSED IN THIS CCO REMAIN IN FORCE

MARK	DATE	DESCRIPTIONS	MP EL BY	RR CH'D	42 CCO#
		REVISIONS			
1	02/19/08	ELECTRICAL MODIFICATIONS			

CONTRACT CHANGE ORDER NO._____
SHEET _____ OF _____

REGISTERED PROFESSIONAL ENGINEER — MAXWELL FUMIO TAKATA — No. E 8651 — Exp. 9/30/2008 ELECTRICAL — STATE OF CALIFORNIA

FOR REVISION ONLY

Caltrans Metric

DIST	COUNTY	ROUTE	KILOMETER POST TOTAL PROJECT	SHEET No	TOTAL SHEETS
04	SF	80	13.2/13.9	371R1	1204

Jens Erlingsson 12/19/02
REGISTERED ELECTRICAL ENGINEER DATE

REGISTERED PROFESSIONAL ENGINEER — JENS ERLINGSSON — No. 8249 — Exp. 9/30/06 ELECTRICAL — STATE OF CALIFORNIA

12-6-04
PLANS APPROVAL DATE

PB POWER, Inc.
A Parsons Brinckerhoff Company
303 Second St., Suite 700N
San Francisco, CA 94107-1317

The State of California or its officers or agents shall not be responsible for the accuracy or completeness of electronic copies of this plan sheet.

Caltrans now has a web site! To get to the web site, go to: http://www.dot.ca.gov

CONDUIT DATA

Conduit No	Reference	Size	Type	Total Fill (mm²)	Allowable Fill (mm²)	Included Cable No.	Conductor Type
2785	E-137	41	RGS conduit	0.00	534.55	Pull rope	Soft-Fiber Polyester
2786	E-137	41	RGS conduit	212.85	534.55	A-3035-2	3 + 1 gnd #6,#8, 600 V, RHH/RHW insulation
						Pull rope	Soft-Fiber Polyester
2787	E-137	41	RGS conduit	212.85	534.55	Pull rope	Soft-Fiber Polyester
						A-3035-2	3 + 1 gnd #6,#8, 600 V, RHH/RHW insulation
2788	E-137	41	RGS conduit	212.85	534.55	Pull rope	Soft-Fiber Polyester
						A-3035-2	3 + 1 gnd #6,#8, 600 V, RHH/RHW insulation
2789	E-138	41	RGS conduit	212.85	534.55	Pull rope	Soft-Fiber Polyester
						A-3035-2	3 + 1 gnd #6,#8, 600 V, RHH/RHW insulation
2790	E-138	41	RGS conduit	212.85	534.55	Pull rope	Soft-Fiber Polyester
						A-3035-2	3 + 1 gnd #6,#8, 600 V, RHH/RHW insulation
2791	E-138	41	RGS conduit	0.00	534.55	Pull rope	Soft-Fiber Polyester
2792	E-138	41	RGS conduit	212.85	534.55	A-3036-2	3 + 1 gnd #6,#8, 600 V, RHH/RHW insulation
						Pull rope	Soft-Fiber Polyester
2793	E-138	41	RGS conduit	212.85	534.55	A-3036-2	3 + 1 gnd #6,#8, 600 V, RHH/RHW insulation
						Pull rope	Soft-Fiber Polyester
2794	E-138	41	RGS conduit	212.85	534.55	Pull rope	Soft-Fiber Polyester
						A-3036-2	3 + 1 gnd #6,#8, 600 V, RHH/RHW insulation
2795	E-138	41	RGS conduit	425.70	534.55	Pull rope	Soft-Fiber Polyester
						A-3036-2	3 + 1 gnd #6,#8, 600 V, RHH/RHW insulation
						LP222-2,4A	3 + 1 gnd #6,#8, 600 V, RHH/RHW insulation
2796	E-138	41	RGS conduit	212.85	534.55	Pull rope	Soft-Fiber Polyester
						A-3036-2	3 + 1 gnd #6,#8, 600 V, RHH/RHW insulation
2797	E-138	41	RGS conduit	212.85	534.55	Pull rope	Soft-Fiber Polyester
						A-3036-2	3 + 1 gnd #6,#8, 600 V, RHH/RHW insulation
2798	E-138	41	RGS conduit	212.85	534.55	A-3036-2	3 + 1 gnd #6,#8, 600 V, RHH/RHW insulation
						Pull rope	Soft-Fiber Polyester
2799	E-138	41	RGS conduit	212.85	534.55	A-3036-2	3 + 1 gnd #6,#8, 600 V, RHH/RHW insulation
						Pull rope	Soft-Fiber Polyester
1 ~~2857~~							
2858	E-135	41	RGS conduit, PVC Coated				
2859	E-135	41	RGS conduit	212.85	534.55	Pull rope	Soft-Fiber Polyester
						A-2011-2	3 + 1 gnd #6,#8, 600 V, RHH/RHW insulation
2860	E-135	41	RGS conduit	0.00	534.55	Pull rope	Soft-Fiber Polyester
2861	E-135	41	RGS conduit	212.85	534.55	Pull rope	Soft-Fiber Polyester
						LP219-6,8A	3 + 1 gnd #6,#8, 600 V, RHH/RHW insulation

For continuation, see next sheet.

CONDUIT AND TRAY SCHEDULE

E-416

DESIGN OVERSIGHT — BEHZAD GOLEMOHAMMADI

CALCULATED/DESIGNED BY — PBP
CHECKED BY — AB

REVISED BY	DATE REVISED
DATE 8/02	8/02

STATE OF CALIFORNIA - DEPARTMENT OF TRANSPORTATION — Caltrans

LAST REVISION 00-00-00
DATE PLOTTED => 3/17/2008
TIME PLOTTED => 5:33:55 PM

FOR REDUCED PLANS ORIGINAL SCALE IS IN MILLIMETERS 0 20 40 60 80

DGN FILE =>T:\13103\MS\pse\SAS Struc\CCO\SAS CC042\04-0120f1_0371R01.dgn
USERNAME =>llorico

CU 04251

EA 0120F1

CONDUIT DATA

Conduit No	Reference	Size	Type	Total Fill (mm²)	Allowable Fill (mm²)	Included Cable No.	Conductor Type
3163	E-229	40	Flexible nonmetallic conduit	425.70	511.11	Pull rope	Soft-Fiber Polyester
						A-3013-2	3 + 1 gnd #6,#8, 600 V, RHH/RHW insulation
						A-3012-2	3 + 1 gnd #6,#8, 600 V, RHH/RHW insulation
3164	E-228, E-229	40	Flexible nonmetallic conduit	425.70	511.11	A-3012-2	3 + 1 gnd #6,#8, 600 V, RHH/RHW insulation
						A-3013-2	3 + 1 gnd #6,#8, 600 V, RHH/RHW insulation
						Pull rope	Soft-Fiber Polyester
3165	E-228	40	Flexible nonmetallic conduit	425.70	511.11	A-3013-2	3 + 1 gnd #6,#8, 600 V, RHH/RHW insulation
						Pull rope	Soft-Fiber Polyester
						A-3012-2	3 + 1 gnd #6,#8, 600 V, RHH/RHW insulation
3166	E-228	40	Flexible nonmetallic conduit	425.70	511.11	A-3013-2	3 + 1 gnd #6,#8, 600 V, RHH/RHW insulation
						Pull rope	Soft-Fiber Polyester
						A-3012-2	3 + 1 gnd #6,#8, 600 V, RHH/RHW insulation
3167	E-228	40	Flexible nonmetallic conduit	425.70	511.11	Pull rope	Soft-Fiber Polyester
						A-3012-2	3 + 1 gnd #6,#8, 600 V, RHH/RHW insulation
						A-3013-2	3 + 1 gnd #6,#8, 600 V, RHH/RHW insulation
3168	E-228	40	Flexible nonmetallic conduit	212.85	511.11	A-3012-2	3 + 1 gnd #6,#8, 600 V, RHH/RHW insulation
						Pull rope	Soft-Fiber Polyester
3169	E-228	40	Flexible nonmetallic conduit	212.85	511.11	Pull rope	Soft-Fiber Polyester
						A-3012-2	3 + 1 gnd #6,#8, 600 V, RHH/RHW insulation
3170	E-228	40	Flexible nonmetallic conduit	212.85	511.11	Pull rope	Soft-Fiber Polyester
						A-3012-2	3 + 1 gnd #6,#8, 600 V, RHH/RHW insulation
3171	E-228	40	Flexible nonmetallic conduit	212.85	511.11	A-3012-2	3 + 1 gnd #6,#8, 600 V, RHH/RHW insulation
						Pull rope	Soft-Fiber Polyester
3172	E-228	40	Flexible nonmetallic conduit	212.85	511.11	A-3012-2	3 + 1 gnd #6,#8, 600 V, RHH/RHW insulation
						Pull rope	Soft-Fiber Polyester
3173	E-228	40	Flexible nonmetallic conduit	212.85	511.11	Pull rope	Soft-Fiber Polyester
						A-3012-2	3 + 1 gnd #6,#8, 600 V, RHH/RHW insulation
3174	E-228	40	Flexible nonmetallic conduit	212.85	511.11	A-3012-2	3 + 1 gnd #6,#8, 600 V, RHH/RHW insulation
						Pull rope	Soft-Fiber Polyester
3175	E-227, E-228	40	Flexible nonmetallic conduit	212.85	511.11	Pull rope	Soft-Fiber Polyester
						A-3012-2	3 + 1 gnd #6,#8, 600 V, RHH/RHW insulation
3176	E-227	40	Flexible nonmetallic conduit	212.85	511.11	Pull rope	Soft-Fiber Polyester
						A-3012-2	3 + 1 gnd #6,#8, 600 V, RHH/RHW insulation
1 3177	E-264, E-264A,	78	RGS-PVC coated conduit	1043.76	1935.24	2119-B	3+1 gnd, #250 kcmil, #1/0, 600 V, EPR insulation
3177C	E-265	78					
3201	E-226	40	Flexible nonmetallic conduit	264.63	511.11	Pull rope	Soft-Fiber Polyester
						S-3056-12	2-1/C #14, 600 V, RHH/RHW insulation
						S-3051-2	3 + 1 gnd #6,#8, 600 V, RHH/RHW insulation
						S-3056-13	2-1/C #14, 600 V, RHH/RHW insulation
3202	E-226	40	Flexible nonmetallic conduit	264.63	511.11	S-3056-12	2-1/C #14, 600 V, RHH/RHW insulation
						S-3056-13	2-1/C #14, 600 V, RHH/RHW insulation
						Pull rope	Soft-Fiber Polyester
						S-3051-2	3 + 1 gnd #6,#8, 600 V, RHH/RHW insulation
3203	E-226	40	Flexible nonmetallic conduit	264.63	511.11	S-3056-13	2-1/C #14, 600 V, RHH/RHW insulation
						S-3051-2	3 + 1 gnd #6,#8, 600 V, RHH/RHW insulation
						S-3056-12	2-1/C #14, 600 V, RHH/RHW insulation
						Pull rope	Soft-Fiber Polyester
3204	E-226, E-227	40	Flexible nonmetallic conduit	451.59	511.11	S-3051-2	3 + 1 gnd #6,#8, 600 V, RHH/RHW insulation
						Pull rope	Soft-Fiber Polyester
						S-3056-12	2-1/C #14, 600 V, RHH/RHW insulation
						S-3056-3	3 + 1 gnd #6,#8, 600 V, RHH/RHW insulation
3205	E-227	40	Flexible nonmetallic conduit	451.59	511.11	S-3056-12	2-1/C #14, 600 V, RHH/RHW insulation
						Pull rope	Soft-Fiber Polyester
						S-3056-3	3 + 1 gnd #6,#8, 600 V, RHH/RHW insulation
						S-3051-2	3 + 1 gnd #6,#8, 600 V, RHH/RHW insulation

REQUEST FOR INFORMATION NOT ADDRESSED IN THIS CCO REMAIN IN FORCE

MARK	DATE	REVISIONS DESCRIPTIONS	MP EL BY	RR CH'D	42 CCO#
1	02/19/08	ELECTRICAL MODIFICATIONS			

CONTRACT CHANGE ORDER NO._____
SHEET _____ OF _____

REGISTERED PROFESSIONAL ENGINEER — MANNELL FUMIO TAKATA — No E 8651 — Exp. 9/30/2008 — ELECTRICAL — STATE OF CALIFORNIA

FOR REVISION ONLY

Caltrans Metric

DIST	COUNTY	ROUTE	KILOMETER POST TOTAL PROJECT	SHEET No	TOTAL SHEETS
04	SF	80	13.2/13.9	379R1	1204

Jens Erlingsson 12/19/02
REGISTERED ELECTRICAL ENGINEER DATE

REGISTERED PROFESSIONAL ENGINEER — JENS ERLINGSSON — No. 8249 — Exp. 9/30/06 — ELECTRICAL — STATE OF CALIFORNIA

12-6-04
PLANS APPROVAL DATE

PB POWER, Inc.
A Parsons Brinckerhoff Company
303 Second St., Suite 700N
San Francisco, CA 94107-1317

The State of California or its officers or agents shall not be responsible for the accuracy or completeness of electronic copies of this plan sheet.

Caltrans now has a web site! To get to the web site, go to: http://www.dot.ca.gov

CONDUIT DATA

Conduit No	Reference	Size	Type	Total Fill (mm²)	Allowable Fill (mm²)	Included Cable No.	Conductor Type
3206	E-227	40	Flexible nonmetallic conduit	425.70	511.11	Pull rope	Soft-Fiber Polyester
						S-3056-3	3 + 1 gnd #6,#8, 600 V, RHH/RHW insulation
						S-3051-2	3 + 1 gnd #6,#8, 600 V, RHH/RHW insulation
3207	E-181, E-135	41	RGS-PVC coated conduit	264.63	534.55	S-3051-2	3 + 1 gnd #6,#8, 600 V, RHH/RHW insulation
						Pull rope	Soft-Fiber Polyester
						S-3056-13	2-1/C #14, 600 V, RHH/RHW insulation
						S-3056-12	2-1/C #14, 600 V, RHH/RHW insulation
3208	E-181	41	RGS-PVC coated conduit	464.20	534.55	S-3051-1	1-3/C + gnd #4 ,600 V, EPR insulation
						Pull rope	Soft-Fiber Polyester
						S-3056-6	1-4/C #14,600 V, EPR insulation
3209	E-181	41	RGS-PVC coated conduit	527.18	534.55	Pull rope	Soft-Fiber Polyester
						A-3041-1	1-3/C + gnd #2,600 V, EPR insulation
3210	E-181, E-135	41	RGS-PVC coated conduit	212.85	534.55	Pull rope	Soft-Fiber Polyester
						A-3041-2	3 + 1 gnd #6,#8, 600 V, RHH/RHW insulation
3211	E-226	41	RGS-PVC coated conduit	212.85	534.55	Pull rope	Soft-Fiber Polyester
						A-3041-2	3 + 1 gnd #6,#8, 600 V, RHH/RHW insulation
3212	E-226	40	Flexible nonmetallic conduit	212.85	511.11	A-3041-2	3 + 1 gnd #6,#8, 600 V, RHH/RHW insulation
						Pull rope	Soft-Fiber Polyester
3213	E-226	40	Flexible nonmetallic conduit	212.85	511.11	A-3041-2	3 + 1 gnd #6,#8, 600 V, RHH/RHW insulation
						Pull rope	Soft-Fiber Polyester
3214	E-226	40	Flexible nonmetallic conduit	212.85	511.11	A-3041-2	3 + 1 gnd #6,#8, 600 V, RHH/RHW insulation
						Pull rope	Soft-Fiber Polyester
3215	E-226	40	Flexible nonmetallic conduit	212.85	511.11	A-3041-2	3 + 1 gnd #6,#8, 600 V, RHH/RHW insulation
						Pull rope	Soft-Fiber Polyester
3216	E-226	40	Flexible nonmetallic conduit	212.85	511.11	A-3041-2	3 + 1 gnd #6,#8, 600 V, RHH/RHW insulation
						Pull rope	Soft-Fiber Polyester
3217	E-226	40	Flexible nonmetallic conduit	212.85	511.11	A-3041-2	3 + 1 gnd #6,#8, 600 V, RHH/RHW insulation
						Pull rope	Soft-Fiber Polyester
3218	E-226,E-227	40	Flexible nonmetallic conduit	212.85	511.11	A-3041-2	3 + 1 gnd #6,#8, 600 V, RHH/RHW insulation
						Pull rope	Soft-Fiber Polyester
3219	E-227	40	Flexible nonmetallic conduit	212.85	511.11	Pull rope	Soft-Fiber Polyester
						A-3041-2	3 + 1 gnd #6,#8, 600 V, RHH/RHW insulation
3220	E-227	40	Flexible nonmetallic conduit	212.85	511.11	A-3041-2	3 + 1 gnd #6,#8, 600 V, RHH/RHW insulation
						Pull rope	Soft-Fiber Polyester
3221	E-227	40	Flexible nonmetallic conduit	212.85	511.11	A-3041-2	3 + 1 gnd #6,#8, 600 V, RHH/RHW insulation
						Pull rope	Soft-Fiber Polyester

For continuation, see next sheet.

CONDUIT AND TRAY SCHEDULE

E-424

REVISED BY	DATE REVISED
DATE 8/02	8/02
PBP	AB
CALCULATED/ DESIGNED BY	CHECKED BY

DESIGN OVERSIGHT
BEHZAD GOLEMOHAMMADI

STATE OF CALIFORNIA - DEPARTMENT OF TRANSPORTATION
Caltrans

LAST REVISION 00-00-00
DATE PLOTTED => 3/17/2008
TIME PLOTTED => 5:34:13 PM

FOR REDUCED PLANS ORIGINAL SCALE IS IN MILLIMETERS 0 20 40 60 80

DGN FILE =>T:\13103\MS\pse\SAS Struc\CCO\SAS CCO42\04-0120f1_0379R01.dgn
USERNAME =>llorico

CU 04251

EA 0120F1

CONDUIT DATA

Conduit No	Reference	Size	Type	Total Fill (mm²)	Allowable Fill (mm²)	Included Cable No.	Conductor Type
3256	E-229	40	Flexible nonmetallic conduit	425.70	511.11	A-3042-2	3 + 1 gnd #6,#8, 600 V, RHH/RHW insulation
						A-3043-2	3 + 1 gnd #6,#8, 600 V, RHH/RHW insulation
						Pull rope	Soft-Fiber Polyester
3257	E-229	40	Flexible nonmetallic conduit	425.70	511.11	A-3043-2	3 + 1 gnd #6,#8, 600 V, RHH/RHW insulation
						Pull rope	Soft-Fiber Polyester
						A-3042-2	3 + 1 gnd #6,#8, 600 V, RHH/RHW insulation
3258	E-229	40	Flexible nonmetallic conduit	425.70	511.11	A-3042-2	3 + 1 gnd #6,#8, 600 V, RHH/RHW insulation
						A-3043-2	3 + 1 gnd #6,#8, 600 V, RHH/RHW insulation
						Pull rope	Soft-Fiber Polyester
3259	E-229	40	Flexible nonmetallic conduit	425.70	511.11	A-3042-2	3 + 1 gnd #6,#8, 600 V, RHH/RHW insulation
						A-3043-2	3 + 1 gnd #6,#8, 600 V, RHH/RHW insulation
						Pull rope	Soft-Fiber Polyester
3260	E-229	40	Flexible nonmetallic conduit	425.70	511.11	A-3042-2	3 + 1 gnd #6,#8, 600 V, RHH/RHW insulation
						A-3043-2	3 + 1 gnd #6,#8, 600 V, RHH/RHW insulation
						Pull rope	Soft-Fiber Polyester
3261	E-229	40	Flexible nonmetallic conduit	425.70	511.11	A-3042-2	3 + 1 gnd #6,#8, 600 V, RHH/RHW insulation
						A-3043-2	3 + 1 gnd #6,#8, 600 V, RHH/RHW insulation
						Pull rope	Soft-Fiber Polyester
3262	E-229	40	Flexible nonmetallic conduit	425.70	511.11	A-3043-2	3 + 1 gnd #6,#8, 600 V, RHH/RHW insulation
						A-3042-2	3 + 1 gnd #6,#8, 600 V, RHH/RHW insulation
						Pull rope	Soft-Fiber Polyester
3263	E-229	40	Flexible nonmetallic conduit	425.70	511.11	A-3042-2	3 + 1 gnd #6,#8, 600 V, RHH/RHW insulation
						Pull rope	Soft-Fiber Polyester
						A-3043-2	3 + 1 gnd #6,#8, 600 V, RHH/RHW insulation
3264	E-228, E-229	40	Flexible nonmetallic conduit	425.70	511.11	A-3042-2	3 + 1 gnd #6,#8, 600 V, RHH/RHW insulation
						A-3043-2	3 + 1 gnd #6,#8, 600 V, RHH/RHW insulation
						Pull rope	Soft-Fiber Polyester
3265	E-228	40	Flexible nonmetallic conduit	425.70	511.11	A-3043-2	3 + 1 gnd #6,#8, 600 V, RHH/RHW insulation
						Pull rope	Soft-Fiber Polyester
						A-3042-2	3 + 1 gnd #6,#8, 600 V, RHH/RHW insulation
3266	E-228	40	Flexible nonmetallic conduit	425.70	511.11	A-3043-2	3 + 1 gnd #6,#8, 600 V, RHH/RHW insulation
						Pull rope	Soft-Fiber Polyester
						A-3042-2	3 + 1gnd #6,#8, 600 V, RHH/RHW insulation
3267	E-228	40	Flexible nonmetallic conduit	425.70	511.11	A-3042-2	3 + 1gnd #6,#8, 600 V, RHH/RHW insulation
						A-3043-2	3 + 1 gnd #6,#8, 600 V, RHH/RHW insulation
						Pull rope	Soft-Fiber Polyester
3268	E-228	40	Flexible nonmetallic conduit	212.85	511.11	Pull rope	Soft-Fiber Polyester
						A-3042-2	3 + 1 gnd #6,#8, 600 V, RHH/RHW insulation
3269	E-228	40	Flexible nonmetallic conduit	212.85	511.11	A-3042-2	3 + 1 gnd #6,#8, 600 V, RHH/RHW insulation
						Pull rope	Soft-Fiber Polyester
3270	E-228	40	Flexible nonmetallic conduit	212.85	511.11	A-3042-2	3 + 1 gnd #6,#8, 600 V, RHH/RHW insulation
						Pull rope	Soft-Fiber Polyester
3271	E-228	40	Flexible nonmetallic conduit	212.85	511.11	A-3042-2	3 + 1 gnd #6,#8, 600 V, RHH/RHW insulation
						Pull rope	Soft-Fiber Polyester
3272	E-228	40	Flexible nonmetallic conduit	212.85	511.11	Pull rope	Soft-Fiber Polyester
						A-3042-2	3 + 1 gnd #6,#8, 600 V, RHH/RHW insulation
3273	E-228	40	Flexible nonmetallic conduit	212.85	511.11	A-3042-2	3 + 1 gnd #6,#8, 600 V, RHH/RHW insulation
						Pull rope	Soft-Fiber Polyester
3274	E-228	40	Flexible nonmetallic conduit	212.85	511.11	A-3042-2	3 + 1 gnd #6,#8, 600 V, RHH/RHW insulation
						Pull rope	Soft-Fiber Polyester
3275	E-227, E-228	40	Flexible nonmetallic conduit	212.85	511.11	A-3042-2	3 + 1gnd #6,#8, 600 V, RHH/RHW insulation
						Pull rope	Soft-Fiber Polyester
3276	E-227	40	Flexible nonmetallic conduit	212.85	511.11	A-3042-2	3 + 1 gnd #6,#8, 600 V, RHH/RHW insulation
						Pull rope	Soft-Fiber Polyester

REQUEST FOR INFORMATION NOT ADDRESSED IN THIS CCO REMAIN IN FORCE

MARK	DATE	DESCRIPTIONS	BY	CH'D	CCO#
		REVISIONS			
1	02/19/08	ELECTRICAL MODIFICATIONS	MP EL	RR	42

CONTRACT CHANGE ORDER NO. _____
SHEET _____ OF _____

REGISTERED PROFESSIONAL ENGINEER — MAXWELL FUMIO TAKATA — No. E 8651 — Exp. 9/30/2008 ELECTRICAL — STATE OF CALIFORNIA

FOR REVISION ONLY

Caltrans Metric

DIST	COUNTY	ROUTE	KILOMETER POST TOTAL PROJECT	SHEET No	TOTAL SHEETS
04	SF	80	13.2/13.9	381R1	1204

12/19/02
REGISTERED ELECTRICAL ENGINEER DATE

REGISTERED PROFESSIONAL ENGINEER — JENS ERLINGSSON — No. 8249 — Exp. 9/30/06 ELECTRICAL — STATE OF CALIFORNIA

12-6-04
PLANS APPROVAL DATE

PB POWER, Inc.
A Parsons Brinckerhoff Company
303 Second St., Suite 700N
San Francisco, CA 94107-1317

The State of California or its officers or agents shall not be responsible for the accuracy or completeness of electronic copies of this plan sheet.

Caltrans now has a web site! To get to the web site, go to http://www.dot.ca.gov

CONDUIT DATA

Conduit No	Reference	Size	Type	Total Fill (mm²)	Allowable Fill (mm²)	Included Cable No.	Conductor Type
1 ~~3277~~							
3277A	E-265	27					
3278	E-264, E-264A	103	RGS-PVC coated conduit	2820.14	3324.51	2123-2	1-3/C + gnd #2/0,600V, EPR insulation
						A-3057-1	1-3/C + gnd #2,600V, EPR insulation
						2123	1-3/C + gnd #2,600V, EPR insulation
						2123-3	1-3/C + gnd #2/0,600V, EPR insulation
3281	E-231, E-264	53	RGS-PVC coated conduit	625.60	879.42	A-3057-1	1-3/C + gnd #2,600V, RHH/RHW insulation
						UP210-5	2 + 1 gnd #12,600V, RHH/RHW insulation
						UP210-7	2 + 1 gnd #12,600V, RHH/RHW insulation
1 3281A	E-264	53					
3282	E-231	41	RGS-PVC coated conduit	425.70	534.55	A-3057-4	3 + 1 gnd #6,#8, 600 V, RHH/RHW insulation
						A-3057-3	3 + 1 gnd #6,#8, 600 V, RHH/RHW insulation
						Pull rope	Soft-Fiber Polyester
3283	E-231	41	RGS-PVC coated conduit	212.85	534.55	Pull rope	Soft-Fiber Polyester
						A-3057-4	3 + 1 gnd #6,#8, 600 V, RHH/RHW insulation
3285	E-231	41	RGS-PVC coated conduit	212.85	534.55	A-3057-3	3 + 1 gnd #6,#8, 600 V, RHH/RHW insulation
						Pull rope	Soft-Fiber Polyester
3286	E-231	41	RGS-PVC coated conduit	212.85	534.55	A-3057-3	3 + 1 gnd #6,#8, 600 V, RHH/RHW insulation
						Pull rope	Soft-Fiber Polyester
3287	E-231	41	RGS-PVC coated conduit	212.85	534.55	A-3057-3	3 + 1 gnd #6,#8, 600 V, RHH/RHW insulation
						Pull rope	Soft-Fiber Polyester
3288	E-231	41	RGS-PVC coated conduit	212.85	534.55	Pull rope	Soft-Fiber Polyester
						A-3057-3	3 + 1 gnd #6,#8, 600 V, RHH/RHW insulation
3290	E-231	41	RGS-PVC coated conduit	212.85	534.55	Pull rope	Soft-Fiber Polyester
						A-3057-4	3 + 1 gnd #6,#8, 600 V, RHH/RHW insulation
3291	E-231	41	RGS-PVC coated conduit	212.85	534.55	Pull rope	Soft-Fiber Polyester
						A-3057-4	3 + 1 gnd #6,#8, 600 V, RHH/RHW insulation
3292	E-231	41	RGS-PVC coated conduit	212.85	534.55	Pull rope	Soft-Fiber Polyester
						A-3057-4	3 + 1 gnd #6,#8, 600 V, RHH/RHW insulation
3293	E-231	41	RGS-PVC coated conduit	212.85	534.55	A-3057-4	3 + 1 gnd #6,#8, 600 V, RHH/RHW insulation
						Pull rope	Soft-Fiber Polyester
3294	E-264, E-264A	41	RGS-PVC coated conduit	170.36	534.55	2120-1	1-3/C #14,600 V, EPR insulation
						2120-2	1-3/C #14,600 V, EPR insulation
3295	E-265	53	RGS conduit	754.18	1255.65	Pull rope	Soft-Fiber Polyester
						2120	1-3/C + gnd #1/0,600 V, EPR insulation
1 3297	E-264, E-264A	27					

For continuation, see next sheet.

CONDUIT AND TRAY SCHEDULE

E-426

DESIGN OVERSIGHT — BEHZAD GOLEMOHAMMADI

CALCULATED/DESIGNED BY — PBP
CHECKED BY — AB
DATE REVISED — DATE 8/02
REVISED BY

STATE OF CALIFORNIA - DEPARTMENT OF TRANSPORTATION
Caltrans

LAST REVISION — DATE PLOTTED => 3/17/2008 TIME PLOTTED => 5:34:39 PM
00-00-00

FOR REDUCED PLANS ORIGINAL SCALE IS IN MILLIMETERS 0 20 40 60 80

DGN FILE =>T:\13103\MS\pse\SAS Struc\CCO\SAS CC042\04-0120f1_381R01.dgn
USERNAME =>llorico

CU 04251

EA 0120F1

CONDUIT DATA

Conduit No	Reference	Size	Type	Total Fill (mm²)	Allowable Fill (mm²)	Included Cable No.	Conductor Type
3298	E-265	53	RGS-PVC coated conduit	102.61	879.42	Pull rope	Soft-Fiber Polyester
						UP210-9	1-3/C #12,600 V, EPR insulation
3311	E-265	53	RGS conduit	0.00	879.42	Pull rope	Soft-Fiber Polyester
3316	E-264	53	RGS conduit	192.46	879.42	Pull rope	Soft-Fiber Polyester
						UP210-2	2 + 1 gnd #8,#10, 600 V, RHH/RHW insulation
						UP210-4	2 + 1 gnd #8,#10, 600 V, RHH/RHW insulation
3316A	E-266	53					
3318	E-264, E264A	78					
3319	E-264, E-264A	78	RGS-PVC coated conduit	1678.72	1935.24	2121	1-3/C + gnd #1/0,600 V, EPR insulation
						2120	1-3/C + gnd #1/0,600 V, EPR insulation
						2121-1	1-3/C #14,600 V, EPR insulation
						2121-2	1-3/C #14,600 V, EPR insulation
3320	E-264, E-265	53	RGS-PVC coated conduit	754.18	1935.24	2120	1-3/C + gnd #1/0,600 V, EPR insulation
						Pull rope	Soft-Fiber Polyester
3320A	E-287	53					

REQUEST FOR INFORMATION NOT ADDRESSED IN THIS CCO REMAIN IN FORCE

MARK	DATE	DESCRIPTIONS	BY	CH'D	CCO#
		REVISIONS			
1	02/19/08	ELECTRICAL MODIFICATIONS	MP EL	RR	42

CONTRACT CHANGE ORDER NO._____
SHEET _____ OF _____

REGISTERED PROFESSIONAL ENGINEER — MAXWELL FUMIO TAKART — No. E 8651 — Exp. 9/30/2008 — ELECTRICAL — STATE OF CALIFORNIA

FOR REVISION ONLY

Caltrans Metric

DIST	COUNTY	ROUTE	KILOMETER POST TOTAL PROJECT	SHEET No	TOTAL SHEETS
04	SF	80	13.2/13.9	382R1	1204

Jens Erlingsson 12/19/02
REGISTERED ELECTRICAL ENGINEER DATE

REGISTERED PROFESSIONAL ENGINEER — JENS ERLINGSSON — No. 8249 — Exp. 9/30/06 — ELECTRICAL — STATE OF CALIFORNIA

12-6-04
PLANS APPROVAL DATE

PB POWER, Inc.
A Parsons Brinckerhoff Company
303 Second St., Suite 700N
San Francisco, CA 94107-1317

The State of California or its officers or agents shall not be responsible for the accuracy or completeness of electronic copies of this plan sheet.

Caltrans now has a web site! To get to the web site, go to http://www.dot.ca.gov

CONDUIT DATA

Conduit No	Reference	Size	Type	Total Fill (mm²)	Allowable Fill (mm²)	Included Cable No.	Conductor Type
3322	E-264, E-264A	78	RGS-PVC coated conduit	1043.76	1935.24	2119-A	3+1 gnd, #250 kcmil, #1/0, 600 V, EPR insulation
						Pull rope	Soft-Fiber Polyester
3323	E-264	78	RGS-PVC coated conduit	924.54	2564.19	2121-2	1-3/C #14,600 V, EPR insulation
						2121-1	1-3/C #14,600 V, EPR insulation
						Pull rope	Soft-Fiber Polyester
						2121	1-3/C + gnd #1/0,600 V, EPR insulation
3322C	E-265	78					
3323A	E-286, E-287	78					
3329	E-265	53	RGS-PVC coated conduit	0.00	879.42	Pull rope	Soft-Fiber Polyester
3330	E-264A, E-281	41	RGS-PVC coated conduit	384.80	879.42	CCTVE01BA	TVP
						CCTVE01BB	TVCP
						CCTVE01AA	TVP
						CCTVE01AB	TVCP
3330C	E-281	41					
3330D	E-281	41					
3332	E-264	78	RGS-PVC coated conduit	0.00	1935.24	Pull rope	Soft-Fiber Polyester
3333	E-264	78	RGS-PVC coated conduit	1375.59	1935.24	Pull rope	Soft-Fiber Polyester
						UP210-11	2 + 1 gnd #8,#10, 600 V, RHH/RHW insulation
						UP210-10	2 + 1 gnd #8,#10, 600 V, RHH/RHW insulation
						2123	1-3/C + gnd #2,600 V, EPR insulation
						UP210-9	2 + 1 gnd #12,#12, 600 V, RHH/RHW insulation
3330E	E-281	41					
3330F	E-281	41					
3337	E-264	53	RGS-PVC coated conduit	145.44	879.42	UP210-8	2 + 1 gnd #8,#10, 600 V, RHH/RHW insulation
						Pull rope	Soft-Fiber Polyester
						UP210-6	2 + 1 gnd #8,#10, 600 V, RHH/RHW insulation
3337A	E-266	53					

For continuation, see next sheet.

CONDUIT AND TRAY SCHEDULE

E-427

REVISED BY	DATE REVISED
PBP	8/02

CALCULATED/DESIGNED BY: AB
CHECKED BY: BEHZAD GOLEMOHAMMADI

DESIGN OVERSIGHT

STATE OF CALIFORNIA - DEPARTMENT OF TRANSPORTATION
Caltrans

FOR REDUCED PLANS ORIGINAL SCALE IS IN MILLIMETERS 0 20 40 60 80

DGN FILE =>T:\13103\MS\pse\SAS Struc\CCO\SAS CC042\04-0120f1_0382R01.dgn
USERNAME =>llorico

CU 04251

EA 0120F1

LAST REVISION 00-00-00
DATE PLOTTED => 3/17/2008
TIME PLOTTED => 5:35:00 PM

CONDUIT DATA

Conduit No	Reference	Size	Type	Total Fill (mm²)	Allowable Fill (mm²)	Included Cable No.	Conductor Type
3339	E-264, E-264A	78	RGS-PVC coated conduit	1043.76	1935.24	2125	3+1 gnd, #250 kcmil, #1/0,600 V,EPR insulation
3345	E-264	53	RGS-PVC coated conduit	454.92	879.42	Pull rope	Soft-Fiber Polyester
						UP210-10	1-2/C + gnd #8,600 V, EPR insulation
						UP210-11	1-2/C + gnd #8,600 V, EPR insulation
3348	E-264A, E-281	41	RGS-PVC coated conduit	300.88	1935.24	MVDSE02A	MVDS DLC
						MVDSW03A	MVDS DLC
3349	E-264A, E-281	41	RGS-PVC coated conduit	173.82	1935.24	CCTVE01BC	TVC
						CCTVE01BD	TVL
1 3349C	E-281	41					
3350	E-285	78	RGS-PVC coated conduit	2093.43	2564.19	2123-3	1-3/C + gnd #2/0,600 V, EPR insulation
						UP210-1B-14	2 + 1 gnd #8,#10, 600 V, RHH/RHW insulation
						Pull rope	Soft-Fiber Polyester
						UP210-1B-13	2 + 1 gnd #8,#10, 600 V, RHH/RHW insulation
3351	E-285	53	RGS-PVC coated conduit	882.89	1935.24	Pull rope	Soft-Fiber Polyester
						2123-3	1-3/C + gnd #2/0,600 V, EPR insulation
1 3351A	E-264	53					
3353	E-285	78	RGS-PVC coated conduit	436.32	1935.24	UP210-1B-12	2 + 1 gnd #12,#12, 600 V, RHH/RHW insulation
						Pull rope	Soft-Fiber Polyester
						UP210-1B-10	2 + 1 gnd #12,#12, 600 V, RHH/RHW insulation
						UP210-1B-8	2 + 1 gnd #12,#12, 600 V, RHH/RHW insulation
3354	E-285	78	RGS-PVC coated conduit	436.32	1935.24	UP210-1B-11	2 + 1 gnd #8,#10, 600 V, RHH/RHW insulation
						UP210-1B-7	2 + 1 gnd #8,#10, 600 V, RHH/RHW insulation
						UP210-1B-9	2 + 1 gnd #8,#10, 600 V, RHH/RHW insulation
						Pull rope	Soft-Fiber Polyester

REQUEST FOR INFORMATION NOT ADDRESSED IN THIS CCO REMAIN IN FORCE

MARK	DATE	DESCRIPTIONS	MP EL	RR BY	42 CH'D	CCO#
1	02/19/08	ELECTRICAL MODIFICATIONS				

REVISIONS

CONTRACT CHANGE ORDER NO._____
SHEET _____ OF _____

REGISTERED PROFESSIONAL ENGINEER — MAXWELL FUMIO TARAMT — No. E 8651 — Exp. 9/30/2008 — ELECTRICAL — STATE OF CALIFORNIA

FOR REVISION ONLY

Caltrans Metric

DIST	COUNTY	ROUTE	KILOMETER POST TOTAL PROJECT	SHEET No	TOTAL SHEETS
04	SF	80	13.2/13.9	383R1	1204

Jens Erlingsson 12/19/02
REGISTERED ELECTRICAL ENGINEER DATE

REGISTERED PROFESSIONAL ENGINEER — JENS ERLINGSSON — No. 8249 — Exp. 9/30/06 — ELECTRICAL — STATE OF CALIFORNIA

12-6-04
PLANS APPROVAL DATE

PB POWER, Inc.
A Parsons Brinckerhoff Company
303 Second St., Suite 700N
San Francisco, CA 94107-1317

The State of California or its officers or agents shall not be responsible for the accuracy or completeness of electronic copies of this plan sheet.

Caltrans now has a web site! To get to the web site, go to http://www.dot.ca.gov

CONDUIT DATA

Conduit No	Reference	Size	Type	Total Fill (mm²)	Allowable Fill (mm²)	Included Cable No.	Conductor Type
3357	E-285	78	RGS-PVC coated conduit	436.32	1935.24	UP210-1B-5	2 + 1 gnd #8,#10, 600 V, RHH/RHW insulation
						Pull rope	Soft-Fiber Polyester
						UP210-1B-1	2 + 1 gnd #8,#10, 600 V, RHH/RHW insulation
						UP210-1B-3	2 + 1 gnd #8,#10, 600 V, RHH/RHW insulation
3358	E-285	78	RGS-PVC coated conduit	436.32	1935.24	UP210-1B-2	2 + 1 gnd #12,#12, 600 V, RHH/RHW insulation
						UP210-1B-6	2 + 1 gnd #12,#12, 600 V, RHH/RHW insulation
						UP210-1B-4	2 + 1 gnd #12,#12, 600 V, RHH/RHW insulation
						Pull rope	Soft-Fiber Polyester
3359	E-264A	41	RGS-PVC coated conduit	173.82	1935.24	CCTVE01AC	TVC
						CCTVE01AD	TVL
1 3359C	E-281	41					
3362	E-285	78	RGS-PVC coated conduit	2081.18	2564.19	2123-2	1-3/C + gnd #2/0,600 V, EPR insulation
						Pull rope	Soft-Fiber Polyester
3364	E-285, E-264	53	RGS-PVC coated conduit	979.12	2564.19	2123-2	1-3/C + gnd #2/0,600 V, EPR insulation
						Pull rope	Soft-Fiber Polyester
1 3364A	E-264	53					

For continuation, see next sheet.

CONDUIT AND TRAY SCHEDULE

E-428

DATE	REVISED BY
8/02	AB

CALCULATED/DESIGNED BY
CHECKED BY

DESIGN OVERSIGHT
BEHZAD GOLEMOHAMMADI

STATE OF CALIFORNIA - DEPARTMENT OF TRANSPORTATION
Caltrans

LAST REVISION 00-00-00
DATE PLOTTED => 3/17/2008
TIME PLOTTED => 5:35:18 PM

FOR REDUCED PLANS ORIGINAL SCALE IS IN MILLIMETERS 0 20 40 60 80

DGN FILE =>T:\13103\MS\pse\SAS Struc\CCO\SAS CCO42\04-0120f1_0383R01.dgn
USERNAME =>llorico

CU 04251

EA 0120F1

CONDUIT DATA

Conduit No	Reference	Size	Type	Total Fill (mm²)	Allowable Fill (mm²)	Included Cable No.	Conductor Type
3365	E-285	78	RGS-PVC coated conduit	520.30	1935.24	Pull rope	Soft-Fiber Polyester
						UP210-1A-3	2 + 1 gnd #8,#10, 600 V, RHH/RHW insulation
						UP210-1A-1	3 + 1 gnd #8,#10, 600 V, RHH/RHW insulation
						UP210-1A-5	2 + 1 gnd #8,#10, 600 V, RHH/RHW insulation
3367	E-285	78	RGS-PVC coated conduit	520.30	1935.24	UP210-1A-4	2 + 1 gnd #8,#10, 600 V, RHH/RHW insulation
						UP210-1A-2	2 + 1 gnd #12,#12, 600 V, RHH/RHW insulation
						UP210-1A-6	2 + 1 gnd #12,#12, 600 V, RHH/RHW insulation
						Pull rope	Soft-Fiber Polyester
3368	E-285	78	RGS-PVC coated conduit	436.32	1935.24	UP210-1A-7	2 + 1 gnd #8,#10, 600 V, RHH/RHW insulation
						UP210-1A-9	2 + 1 gnd #8,#10, 600 V, RHH/RHW insulation
						UP210-1A-11	2 + 1 gnd #8,#10, 600 V, RHH/RHW insulation
						Pull rope	Soft-Fiber Polyester
3369	E-285	78	RGS-PVC coated conduit	436.32	1935.24	UP210-1A-12	2 + 1 gnd #12,#12, 600 V, RHH/RHW insulation
						UP210-1A-10	2 + 1 gnd #12,#12, 600 V, RHH/RHW insulation
						Pull rope	Soft-Fiber Polyester
						UP210-1A-8	2 + 1 gnd #12,#12, 600 V, RHH/RHW insulation
3393	E-287	78	RGS-PVC coated conduit	924.54	1935.24	2121	1-3/C + gnd #1/0,600 V, EPR insulation
						2121-2	1-3/C #14,600 V, EPR insulation
						2121-1	1-3/C #14,600 V, EPR insulation
3398	E-265	53	RGS-PVC coated conduit	0.00	879.42	Pull rope	Soft-Fiber Polyester
3399	E-265	41	RGS-PVC coated conduit	170.36	534.55	2120-1	1-3/C #14,600 V, EPR insulation
						Pull rope	Soft-Fiber Polyester
						2120-2	1-3/C #14,600 V, EPR insulation

REQUEST FOR INFORMATION NOT ADDRESSED IN THIS CCO REMAIN IN FORCE

MARK	DATE	DESCRIPTIONS	BY	CH'D	CCO#
		REVISIONS			
1	02/19/08	ELECTRICAL MODIFICATIONS	MP EL	RR	42

CONTRACT CHANGE ORDER NO. _____
SHEET _____ OF _____

REGISTERED PROFESSIONAL ENGINEER — MAXWELL FUMIO TARAMY — No. E 8651 — Exp. 9/30/2008 ELECTRICAL — STATE OF CALIFORNIA

FOR REVISION ONLY

Caltrans Metric

DIST	COUNTY	ROUTE	KILOMETER POST TOTAL PROJECT	SHEET No	TOTAL SHEETS
04	SF	80	13.2/13.9	384R1	1204

Jens Erlingsson 12/19/02
REGISTERED ELECTRICAL ENGINEER DATE

REGISTERED PROFESSIONAL ENGINEER — JENS ERLINGSSON — No. 8249 — Exp. 9/30/06 ELECTRICAL — STATE OF CALIFORNIA

12-6-04
PLANS APPROVAL DATE

PB POWER, Inc.
A Parsons Brinckerhoff Company
303 Second St., Suite 700N
San Francisco, CA 94107-1317

The State of California or its officers or agents shall not be responsible for the accuracy or completeness of electronic copies of this plan sheet.

Caltrans now has a web site! To get to the web site, go to http://www.dot.ca.gov

CONDUIT DATA

Conduit No	Reference	Size	Type	Total Fill (mm²)	Allowable Fill (mm²)	Included Cable No.	Conductor Type
3448	E-285 (1)	53	RGS-PVC coated conduit	241.67	879.42	Pull rope	Soft-Fiber Polyester
						UP210-1B-16	2 + 1 gnd #8,#10, 600 V, RHH/RHW insulation
						UP210-1B-15	2 + 1 gnd #8,#10, 600 V, RHH/RHW insulation
(1) 3448A	E-286	53					

For continuation, see next sheet.

CONDUIT AND TRAY SCHEDULE

E-429

DESIGN OVERSIGHT
BEHZAD GOLEMOHAMMADI

STATE OF CALIFORNIA - DEPARTMENT OF TRANSPORTATION
Caltrans

REVISED BY	DATE REVISED
DATE 8/02	8/02
PBP	AB
CALCULATED/ DESIGNED BY	CHECKED BY

LAST REVISION 00-00-00
DATE PLOTTED => 3/17/2008
TIME PLOTTED => 5:39:19 PM

FOR REDUCED PLANS ORIGINAL SCALE IS IN MILLIMETERS 0 20 40 60 80

DGN FILE =>T:\13103\MS\pse\SAS Struc\CCO\SAS CC042\04-0120f1_0384R01.dgn
USERNAME =>llorico

CU 04251

EA 0120F1

CONDUIT DATA

Conduit No	Reference	Size	Type	Total Fill (mm²)	Allowable Fill (mm²)	Included Cable No.	Conductor Type
3459	E-264	41	RGS-PVC coated conduit	102.61	534.55	Pull rope	Soft-Fiber Polyester
						UP210-9	2 + 1 gnd #12,#12, 600 V, RHH/RHW insulation
1 3459A	E-265	41					
3464	E-285	53	RGS-PVC coated conduit	145.44	879.42	UP210-1A-14	2 + 1 gnd #12,#12, 600 V, RHH/RHW insulation
						UP210-1A-13	2 + 1 gnd #8,#10, 600 V, RHH/RHW insulation
1 3464A	E-286	53					
3500	E-284, E-274	53	RGS-PVC coated conduit	471.09	879.42	UP210-1A-1	3 + 1 gnd #8,#10, 600 V, RHH/RHW insulation
						UP210-1A-1C	2 + 1 gnd #8, #10, 600 V, RHH/RHW insulation
						Pull rope	Soft-Fiber Polyester
						UP210-1A-2	2 + 1 gnd #12,#12, 600 V, RHH/RHW insulation
3501	E-282	53	RGS-PVC coated conduit	567.32	879.42	UP210-1A-1A	3 + 1 gnd #8,#10, 600 V, RHH/RHW insulation
						UP210-1A-2	2 + 1 gnd #12,#12, 600 V, RHH/RHW insulation
						UP210-1A-1C	2 + 1 gnd #8, #10, 600 V, RHH/RHW insulation
						Pull rope	Soft-Fiber Polyester
3502	E-284, E-274	78	RGS-PVC coated conduit	520.30	1935.24	UP210-1A-1B	3 + 1 gnd #8,#10, 600 V, RHH/RHW insulation
						UP210-1A-2	2 + 1 gnd #12,#12, 600 V, RHH/RHW insulation
						UP210-1A-1C	2 + 1 gnd #8, #10, 600 V, RHH/RHW insulation
						Pull rope	Soft-Fiber Polyester
3503	E-284, E-274	53	RGS-PVC coated conduit	808.99	879.42	Pull rope	Soft-Fiber Polyester
						UP210-1A-3C	2 + 1 gnd #8,#10, 600 V, RHH/RHW insulation
						UP210-1A-3	2 + 1 gnd #8,#10, 600 V, RHH/RHW insulation
						UP210-1A-4	2 + 1 gnd #8,#10, 600 V, RHH/RHW insulation
3504	E-282, E-284, E-285	53	RGS-PVC coated conduit	520.30	879.42	UP210-1A-3C	3 + 1 gnd #8,#10, 600 V, RHH/RHW insulation
						Pull rope	Soft-Fiber Polyester
						UP210-1A-3A	2 + 1 gnd #8,#10, 600 V, RHH/RHW insulation
						UP210-1A-4	2 + 1 gnd #8,#10, 600 V, RHH/RHW insulation
3505	E-284, E-274	53	RGS-PVC coated conduit	352.55	879.42	UP210-1A-4	2 + 1 gnd #12,#12, 600 V, RHH/RHW insulation
						UP210-1A-3C	3 + 1 gnd #8,#10, 600 V, RHH/RHW insulation
						Pull rope	Soft-Fiber Polyester
						UP210-1A-3B	2 + 1 gnd #8,#10, 600 V, RHH/RHW insulation
3506	E-284, E-274	53	RGS-PVC coated conduit	241.67	879.42	UP210-1A-5	2 + 1 gnd #8,#10, 600 V, RHH/RHW insulation
						UP210-1A-5C	2 + 1 gnd #8,#10, 600 V, RHH/RHW insulation
						UP210-1A-6	2 + 1 gnd #12,#12, 600 V, RHH/RHW insulation
3507	E-284, E-274	53	RGS-PVC coated conduit	241.67	879.42	UP210-1A-6	2 + 1 gnd #12,#12, 600 V, RHH/RHW insulation
						UP210-1A-5A	2 + 1 gnd #8,#10, 600 V, RHH/RHW insulation
						UP210-1A-5C	2 + 1 gnd #8,#10, 600 V, RHH/RHW insulation
3508	E-284, E-274	53	RGS-PVC coated conduit	241.67	879.42	UP210-1A-5B	2 + 1 gnd #8,#10, 600 V, RHH/RHW insulation
						UP210-1A-5C	2 + 1 gnd #8,#10, 600 V, RHH/RHW insulation
						UP210-1A-6	2 + 1 gnd #12,#12, 600 V, RHH/RHW insulation
3600	E-284, E-274	53	RGS-PVC coated conduit	387.11	879.42	UP210-1A-7	2 + 1 gnd #8,#10, 600 V, RHH/RHW insulation
						UP210-1A-7C	2 + 1 gnd #8,#10, 600 V, RHH/RHW insulation
						Pull rope	Soft-Fiber Polyester
						UP210-1A-8	2 + 1 gnd #12,#12, 600 V, RHH/RHW insulation
3601	E-284, E-274	53	RGS-PVC coated conduit	483.34	879.42	UP210-1A-7C	2 + 1 gnd #8,#10, 600 V, RHH/RHW insulation
						UP210-1A-7A	2 + 1 gnd #8,#10, 600 V, RHH/RHW insulation
						UP210-1A-8	2 + 1 gnd #12,#12, 600 V, RHH/RHW insulation
						Pull rope	Soft-Fiber Polyester

REVISED BY | DATE REVISED
PBP | 8/02
CALCULATED/ DESIGNED BY | CHECKED BY
DESIGN OVERSIGHT
BEHZAD GOLEMOHAMMADI

STATE OF CALIFORNIA - DEPARTMENT OF TRANSPORTATION
Caltrans

REQUEST FOR INFORMATION NOT ADDRESSED IN THIS CCO REMAIN IN FORCE

MARK	DATE	DESCRIPTIONS	BY	CH'D	CCO#
		REVISIONS			
1	02/19/08	ELECTRICAL MODIFICATIONS	MP EL	RR	42

CONTRACT CHANGE ORDER NO._____
SHEET _____ OF _____

REGISTERED PROFESSIONAL ENGINEER — MAXWELL FUMIO TAKATA — No. E 8651 — Exp. 9/30/2008 ELECTRICAL — STATE OF CALIFORNIA

FOR REVISION ONLY

Caltrans Metric

DIST	COUNTY	ROUTE	KILOMETER POST TOTAL PROJECT	SHEET No	TOTAL SHEETS
04	SF	80	13.2/13.9	385R1	1204

Jens Erlingsson 12/19/02
REGISTERED ELECTRICAL ENGINEER DATE

REGISTERED PROFESSIONAL ENGINEER — JENS ERLINGSSON — No. 8249 — Exp. 9/30/06 ELECTRICAL — STATE OF CALIFORNIA

12-6-04
PLANS APPROVAL DATE

PB POWER, Inc.
A Parsons Brinckerhoff Company
303 Second St., Suite 700N
San Francisco, CA 94107-1317

The State of California or its officers or agents shall not be responsible for the accuracy or completeness of electronic copies of this plan sheet.

Caltrans now has a web site! To get to the web site, go to http://www.dot.ca.gov

CONDUIT DATA

Conduit No	Reference	Size	Type	Total Fill (mm²)	Allowable Fill (mm²)	Included Cable No.	Conductor Type
3602	E-284, E-274	78	RGS-PVC coated conduit	436.32	1935.24	UP210-1A-8	2 + 1 gnd #12,#12, 600 V, RHH/RHW insulation
						UP210-1A-7B	2 + 1 gnd #8,#10, 600 V, RHH/RHW insulation
						UP210-1A-7C	2 + 1 gnd #8,#10, 600 V, RHH/RHW insulation
						Pull rope	Soft-Fiber Polyester
3603	E-284	53	RGS-PVC coated conduit	725.01	879.42	UP210-1A-10	2 + 1 gnd #12,#12, 600 V, RHH/RHW insulation
						UP210-1A-9C	2 + 1 gnd #8,#10, 600 V, RHH/RHW insulation
						Pull rope	Soft-Fiber Polyester
						UP210-1A-9	2 + 1 gnd #8,#10, 600 V, RHH/RHW insulation
3604	E-284, E-285	78	RGS-PVC coated conduit	436.32	1935.24	Pull rope	Soft-Fiber Polyester
						UP210-1A-9C	2 + 1 gnd #8,#10, 600 V, RHH/RHW insulation
						UP210-1A-9A	2 + 1 gnd #8,#10, 600 V, RHH/RHW insulation
						UP210-1A-10	2 + 1 gnd #12,#12, 600 V, RHH/RHW insulation
3605	E-284, E-274	53	RGS-PVC coated conduit	337.90	879.42	UP210-1A-10	2 + 1 gnd #12,#12, 600 V, RHH/RHW insulation
						UP210-1A-9B	2 + 1 gnd #8,#10, 600 V, RHH/RHW insulation
						UP210-1A-9C	2 + 1 gnd #8,#10, 600 V, RHH/RHW insulation
						Pull rope	Soft-Fiber Polyester
3606	E-284, E-274	53	RGS-PVC coated conduit	241.67	879.42	UP210-1A-12	2 + 1 gnd #12,#12, 600 V, RHH/RHW insulation
						UP210-1A-11	2 + 1 gnd #8,#10, 600 V, RHH/RHW insulation
						UP210-1A-11C	2 + 1 gnd #8,#10, 600 V, RHH/RHW insulation
3607	E-284, E-274	53	RGS-PVC coated conduit	241.67	879.42	UP210-1A-11A	2 + 1 gnd #8,#10, 600 V, RHH/RHW insulation
						UP210-1A-11C	2 + 1 gnd #8,#10, 600 V, RHH/RHW insulation
						UP210-1A-12	2 + 1 gnd #12,#12, 600 V, RHH/RHW insulation
3608	E-284, E-274	53	RGS-PVC coated conduit	241.67	879.42	UP210-1A-12	2 + 1 gnd #12,#12, 600 V, RHH/RHW insulation
						UP210-1A-11B	2 + 1 gnd #8,#10, 600 V, RHH/RHW insulation
						UP210-1A-11C	2 + 1 gnd #8,#10, 600 V, RHH/RHW insulation
3700	E-284, E-275	53	RGS-PVC coated conduit	387.11	879.42	UP210-1B-1	2 + 1 gnd #8,#10, 600 V, RHH/RHW insulation
						UP210-1B-2	2 + 1 gnd #12,#12, 600 V, RHH/RHW insulation
						Pull rope	Soft-Fiber Polyester
3701	E-284	53	RGS-PVC coated conduit	483.34	879.42	UP210-1B-1A	2 + 1 gnd #8,#10, 600 V, RHH/RHW insulation
						UP210-1B-2	2 + 1 gnd #12,#12, 600 V, RHH/RHW insulation
						Pull rope	Soft-Fiber Polyester

For continuation, see next sheet.

CONDUIT AND TRAY SCHEDULE

E-430

LAST REVISION 00-00-00 | DATE PLOTTED => 3/17/2008 | TIME PLOTTED => 5:39:41 PM

FOR REDUCED PLANS ORIGINAL SCALE IS IN MILLIMETERS 0 20 40 60 80

DGN FILE =>T:\13103\MS\pse\SAS Struc\CCO\SAS CC042\04-0120f1_0385R01.dgn
USERNAME =>llorico

CU 04251 | EA 0120F1

CONDUIT DATA

Conduit No	Reference	Size	Type	Total Fill (mm²)	Allowable Fill (mm²)	Included Cable No.	Conductor Type
4311	E-96	41	RGS conduit	126.88	534.55	UP104-3	1-2/c + gnd #10,600 V, EPR insulation
						Pull rope	Soft-Fiber Polyester
4312	E-96	41	RGS conduit	0.00	534.55	Pull rope	Soft-Fiber Polyester
4313	E-96	78	RGS conduit	1020.16	1935.24	Pull rope	Soft-Fiber Polyester
						S-1031-1	1-3/c + gnd #2,600 V, EPR insulation
						UP104-3	1-2/c + gnd #10,600 V, EPR insulation
						A-1035-3	1-3/c + gnd #6,600 V, EPR insulation
4314	E-96	53	RGS conduit	648.58	879.42	S-1031-3	1-3/c + gnd #6,600 V, EPR insulation
						A-1035-3	1-3/c + gnd #6,600 V, EPR insulation
						Pull rope	Soft-Fiber Polyester
4315	E-96	41	RGS conduit	0.00	534.55	Pull rope	Soft-Fiber Polyester
4316	E-96	41	RGS conduit	0.00	534.55	Pull rope	Soft-Fiber Polyester
4317	E-96	53	RGS conduit	851.47	879.42	A-1011-1	1-3/c + gnd #2,600 V, EPR insulation
						Pull rope	Soft-Fiber Polyester
						A-1011-2	1-3/c + gnd #6,600 V, EPR insulation
4320	E-96	53	RGS conduit	0.00	879.42	Pull rope	Soft-Fiber Polyester
4321	E-96	41	RGS conduit	0.00	534.55	Pull rope	Soft-Fiber Polyester
4322	E-96	41	RGS conduit	0.00	534.55	Pull rope	Soft-Fiber Polyester
4323	E-96	53	RGS conduit	0.00	879.42	Pull rope	Soft-Fiber Polyester
4324	E-96	53	RGS conduit	0.00	879.42	Pull rope	Soft-Fiber Polyester
4325	E-96	41	RGS conduit	0.00	534.55	Pull rope	Soft-Fiber Polyester
4326	E-96	41	RGS conduit	0.00	534.55	Pull rope	Soft-Fiber Polyester
4327	E-96	41	RGS conduit	0.00	534.55	Pull rope	Soft-Fiber Polyester
4328	E-96	41	RGS conduit	0.00	534.55	Pull rope	Soft-Fiber Polyester
4329	E-96	41	RGS conduit	0.00	534.55	Pull rope	Soft-Fiber Polyester
4330	E-96	41	RGS conduit	0.00	534.55	Pull rope	Soft-Fiber Polyester
4331	E-96	41	RGS conduit	0.00	534.55	Pull rope	Soft-Fiber Polyester
4332	E-96	41	RGS conduit	0.00	534.55	Pull rope	Soft-Fiber Polyester
4333	E-97	41	RGS conduit	212.85	534.55	Pull rope	Soft-Fiber Polyester
						A-3002-2	3 + 1 gnd #6,#8, 600 V, RHH/RHW insulation
4334	E-97	41	RGS conduit	0.00	534.55	Pull rope	Soft-Fiber Polyester
4335	E-97	53	RGS conduit	366.10	879.42	Pull rope	Soft-Fiber Polyester
						A-3002-1	1-3/c + gnd #4,600 V, EPR insulation
4336	E-97	53	RGS conduit	0.00	879.42	Pull rope	Soft-Fiber Polyester
4337	E-97	41	RGS conduit	0.00	534.55	Pull rope	Soft-Fiber Polyester
4338	E-97	41	RGS conduit	0.00	534.55	Pull rope	Soft-Fiber Polyester
4339	E-97	41	RGS conduit	0.00	534.55	Pull rope	Soft-Fiber Polyester
4340	E-97	41	RGS conduit	0.00	534.55	Pull rope	Soft-Fiber Polyester
4341	E-97	53	RGS conduit	0.00	879.42	Pull rope	Soft-Fiber Polyester
4342	E-97	53	RGS conduit	0.00	879.42	Pull rope	Soft-Fiber Polyester
4343	E-97	41	RGS conduit	0.00	534.55	Pull rope	Soft-Fiber Polyester
4344	E-97	41	RGS conduit	0.00	534.55	Pull rope	Soft-Fiber Polyester

REQUEST FOR INFORMATION NOT ADDRESSED IN THIS CCO REMAIN IN FORCE

MARK	DATE	DESCRIPTIONS	MP EL BY	RR CH'D	42 CCO#
1	02/19/08	ELECTRICAL MODIFICATIONS			

REVISIONS

CONTRACT CHANGE ORDER NO._____
SHEET _____ OF _____

REGISTERED PROFESSIONAL ENGINEER — MAXWELL FUMIO TABARI — No. E 8651 — Exp. 9/30/2008 ELECTRICAL — STATE OF CALIFORNIA

FOR REVISION ONLY

Caltrans Metric

DIST	COUNTY	ROUTE	KILOMETER POST TOTAL PROJECT	SHEET No	TOTAL SHEETS
04	SF	80	13.2/13.9	390R1	1204

Jens Erlingsson 12/19/02
REGISTERED ELECTRICAL ENGINEER DATE

REGISTERED PROFESSIONAL ENGINEER — JENS ERLINGSSON — No. 8249 — Exp. 9/30/06 ELECTRICAL — STATE OF CALIFORNIA

12-6-04
PLANS APPROVAL DATE

PB POWER, Inc.
A Parsons Brinckerhoff Company
303 Second St., Suite 700N
San Francisco, CA 94107-1317

The State of California or its officers or agents shall not be responsible for the accuracy or completeness of electronic copies of this plan sheet.

Caltrans now has a web site! To get to the web site, go to http://www.dot.ca.gov

CONDUIT DATA

Conduit No	Reference	Size	Type	Total Fill (mm²)	Allowable Fill (mm²)	Included Cable No.	Conductor Type
4345	E-119	53	RGS conduit	0.00	879.42	Pull rope	Soft-Fiber Polyester
4351	E-97	41	RGS conduit	227.46	534.55	Pull rope	Soft-Fiber Polyester
						UP105-2	1-2/c + gnd #8,600 V, EPR insulation
4352	E-97	41	RGS conduit	0.00	534.55	Pull rope	Soft-Fiber Polyester
4353	E-97	53	RGS conduit	227.46	879.42	Pull rope	Soft-Fiber Polyester
						UP105-2	1-2/c + gnd #8,600 V, EPR insulation
4354	E-97	53	RGS conduit	0.00	879.42	Pull rope	Soft-Fiber Polyester
4355	E-97	41	RGS conduit	0.00	534.55	Pull rope	Soft-Fiber Polyester
4356	E-97	41	RGS conduit	0.00	534.55	Pull rope	Soft-Fiber Polyester
4357	E-97	41	RGS conduit	466.61	534.55	UP205-1	1-2/c + gnd #10,600 V, EPR insulation
						Pull rope	Soft-Fiber Polyester
						UP105-3	1-2/c + gnd #10,600 V, EPR insulation
						A-3009-2	3 + 1 gnd #6,#8, 600 V, RHH/RHW insulation
4358	E-97	41	RGS conduit	0.00	534.55	Pull rope	Soft-Fiber Polyester
4359	E-97	53	RGS conduit	451.17	879.42	A-3009-3	1-3/c + gnd #6,600 V, EPR insulation
						UP205-1	1-2/c + gnd #10,600 V, EPR insulation
						Pull rope	Soft-Fiber Polyester
4360	E-97	53	RGS conduit	527.18	879.42	Pull rope	Soft-Fiber Polyester
						A-3009-1	1-3/c + gnd #2,600 V, EPR insulation
4361	E-97	41	RGS conduit	98.10	534.55	Pull rope	Soft-Fiber Polyester
						1143	1 - 2 pair, shielded #18 with IS/OA, 300 V, PVC jacket
4362	E-97	41	RGS conduit	0.00	534.55	Pull rope	Soft-Fiber Polyester
4363	E-97	41	RGS conduit	324.29	534.55	A-3009-3	1-3/c + gnd #6,600 V, EPR insulation
						Pull rope	Soft-Fiber Polyester
4364	E-97	41	RGS conduit	212.85	534.55	A-3003-2	3 + 1 gnd #6,#8, 600 V, RHH/RHW insulation
						Pull rope	Soft-Fiber Polyester
4365	E-97	53	RGS conduit	324.29	879.42	A-3009-3	1-3/c + gnd #6,600 V, EPR insulation
						Pull rope	Soft-Fiber Polyester
4366	E-97	53	RGS conduit	366.10	879.42	A-3003-1	1-3/c + gnd #4,600 V, EPR insulation
						Pull rope	Soft-Fiber Polyester
4367	E-97	41	RGS conduit	98.10	534.55	Pull rope	Soft-Fiber Polyester
						1142	1 - 2 pair, shielded #18 with IS/OA, 300 V, PVC jacket
4368	E-97	41	RGS conduit	0.00	534.55	Pull rope	Soft-Fiber Polyester

For continuation, see next sheet.

CONDUIT AND TRAY SCHEDULE

E-435

DATE	REVISED BY
8/02	AB

CALCULATED/DESIGNED BY
CHECKED BY

DESIGN OVERSIGHT
BEHZAD GOLEMOHAMMADI

STATE OF CALIFORNIA - DEPARTMENT OF TRANSPORTATION
Caltrans

LAST REVISION 00-00-00
DATE PLOTTED => 3/17/2008
TIME PLOTTED => 5:40:03 PM

FOR REDUCED PLANS ORIGINAL SCALE IS IN MILLIMETERS 0 20 40 60 80

DGN FILE =>T:\13103\MS\pse\SAS Struc\CCO\SAS CC042\04-0120f1_0390R01.dgn
USERNAME =>llorico

CU 04251

EA 0120F1

CONDUIT DATA

Conduit No	Reference	Size	Type	Total Fill (mm²)	Allowable Fill (mm²)	Included Cable No.	Conductor Type
4433	E-98	41	RGS conduit	0.00	534.55	Pull rope	Soft-Fiber Polyester
4434	E-98	41	RGS conduit	0.00	534.55	Pull rope	Soft-Fiber Polyester
4435	E-119	53	RGS conduit	0.00	879.42	Pull rope	Soft-Fiber Polyester
4436	E-98	53	RGS conduit	324.29	879.42	Pull rope	Soft-Fiber Polyester
						A-1012-2	1-3/C + gnd #6, 600 V, EPR insulation
4441	E-99	41	RGS conduit	0.00	534.55	Pull rope	Soft-Fiber Polyester
4442	E-99	41	RGS conduit	0.00	534.55	Pull rope	Soft-Fiber Polyester
4443	E-99	53	RGS conduit	0.00	879.42	Pull rope	Soft-Fiber Polyester
4444	E-99	53	RGS conduit	0.00	879.42	Pull rope	Soft-Fiber Polyester
4445	E-99	41	RGS conduit	0.00	534.55	Pull rope	Soft-Fiber Polyester
4446	E-99	41	RGS conduit	0.00	534.55	Pull rope	Soft-Fiber Polyester
4447	E-99	41	RGS conduit	0.00	534.55	Pull rope	Soft-Fiber Polyester
4448	E-99	41	RGS conduit	0.00	534.55	Pull rope	Soft-Fiber Polyester
4449	E-98	53	RGS conduit	0.00	879.42	Pull rope	Soft-Fiber Polyester
4450	E-98	53	RGS conduit	0.00	879.42	Pull rope	Soft-Fiber Polyester
4451	E-99	41	RGS conduit	0.00	534.55	Pull rope	Soft-Fiber Polyester
4452	E-99	41	RGS conduit	0.00	534.55	Pull rope	Soft-Fiber Polyester
4453	E-99	41	RGS conduit	440.31	534.55	Pull rope	Soft-Fiber Polyester
						UP108-2A	1-2/C + gnd #8, 600 V, EPR insulation
						A-3006-2	3 + 1 gnd #6,#8, 600 V, RHH/RHW insulation
4454	E-99	41	RGS conduit	0.00	534.55	Pull rope	Soft-Fiber Polyester
4455	E-99	53	RGS conduit	593.56	879.42	UP108-2A	1-2/C + gnd #8, 600 V, EPR insulation
						A-3006-1	1-3/C + gnd #4, 600 V, EPR insulation
						Pull rope	Soft-Fiber Polyester
4456	E-99	53	RGS conduit	0.00	879.42	Pull rope	Soft-Fiber Polyester
4457	E-99	41	RGS conduit	98.10	534.55	Pull rope	Soft-Fiber Polyester
						1144	1 - 2 pair, shielded #18 with IS/OA , 300 V, PVC jacket
4458	E-99	41	RGS conduit	0.00	534.55	Pull rope	Soft-Fiber Polyester
4459	E-99	41	RGS conduit	227.46	534.55	Pull rope	Soft-Fiber Polyester
						UP108-4A	1-2/C + gnd #8, 600 V, EPR insulation
4460	E-99	41	RGS conduit	0.00	534.55	Pull rope	Soft-Fiber Polyester
4461	E-99	53	RGS conduit	227.46	879.42	Pull rope	Soft-Fiber Polyester
						UP108-4A	1-2/C + gnd #8, 600 V, EPR insulation
4462	E-99	53	RGS conduit	0.00	879.42	Pull rope	Soft-Fiber Polyester
4463	E-99	41	RGS conduit	98.10	534.55	1145	1 - 2 pair, shielded #18 with IS/OA , 300 V, PVC jacket
						Pull rope	Soft-Fiber Polyester
4464	E-99	41	RGS conduit	0.00	534.55	Pull rope	Soft-Fiber Polyester
4465	E-99	78	RGS conduit	648.58	1935.24	A-1013-2	1-3/C + gnd #6, 600 V, EPR insulation
						A-1013-2	1-3/C + gnd #6, 600 V, EPR insulation
						Pull rope	Soft-Fiber Polyester
4466	E-119	53	RGS conduit	0.00	879.42	Pull rope	Soft-Fiber Polyester
4471	E-99	41	RGS conduit	0.00	534.55	Pull rope	Soft-Fiber Polyester
4472	E-99	41	RGS conduit	0.00	534.55	Pull rope	Soft-Fiber Polyester
4473	E-99	53	RGS conduit	0.00	879.42	Pull rope	Soft-Fiber Polyester
4474	E-99	53	RGS conduit	0.00	879.42	Pull rope	Soft-Fiber Polyester

REQUEST FOR INFORMATION NOT ADDRESSED IN THIS CCO REMAIN IN FORCE

MARK	DATE	DESCRIPTIONS	MP EL BY	RR CH'D	42 CCO#
1	02/19/08	ELECTRICAL MODIFICATIONS			

REVISIONS

CONTRACT CHANGE ORDER NO._____
SHEET _____ OF _____

REGISTERED PROFESSIONAL ENGINEER — MAXWELL FUMIO TAKATA — No. E 8651 — Exp. 9/30/2008 ELECTRICAL — STATE OF CALIFORNIA

FOR REVISION ONLY

Caltrans Metric

DIST	COUNTY	ROUTE	KILOMETER POST TOTAL PROJECT	SHEET No	TOTAL SHEETS
04	SF	80	13.2/13.9	392R1	1204

Jens Erlingsson 12/19/02
REGISTERED ELECTRICAL ENGINEER DATE

REGISTERED PROFESSIONAL ENGINEER — JENS ERLINGSSON — No. 8249 — Exp. 9/30/06 ELECTRICAL — STATE OF CALIFORNIA

12-6-04
PLANS APPROVAL DATE

PB POWER, Inc.
A Parsons Brinckerhoff Company
303 Second St., Suite 700N
San Francisco, CA 94107-1317

The State of California or its officers or agents shall not be responsible for the accuracy or completeness of electronic copies of this plan sheet.

Caltrans now has a web site! To get to the web site, go to http://www.dot.ca.gov

CONDUIT DATA

Conduit No	Reference	Size	Type	Total Fill (mm²)	Allowable Fill (mm²)	Included Cable No.	Conductor Type
4475	E-99	41	RGS conduit	0.00	534.55	Pull rope	Soft-Fiber Polyester
4476	E-99	41	RGS conduit	0.00	534.55	Pull rope	Soft-Fiber Polyester
4477	E-99	41	RGS conduit	227.46	534.55	UP107-3	1-2/C + gnd #8, 600 V, EPR insulation
						Pull rope	Soft-Fiber Polyester
4478	E-99	41	RGS conduit	126.88	534.55	Pull rope	Soft-Fiber Polyester
						UP207-1	1-2/C + gnd #10, 600 V, EPR insulation
4479	E-99	53	RGS conduit	0.00	879.42	Pull rope	Soft-Fiber Polyester
4480	E-99	53	RGS conduit	126.88	879.42	UP207-1	1-2/C + gnd #10, 600 V, EPR insulation
						Pull rope	Soft-Fiber Polyester
4481	E-99	41	RGS conduit	0.00	534.55	Pull rope	Soft-Fiber Polyester
4482	E-99	41	RGS conduit	0.00	534.55	Pull rope	Soft-Fiber Polyester
4483	E-99	41	RGS conduit	0.00	534.55	Pull rope	Soft-Fiber Polyester
4484	E-99	41	RGS conduit	0.00	534.55	Pull rope	Soft-Fiber Polyester
4485	E-99	53	RGS conduit	0.00	879.42	Pull rope	Soft-Fiber Polyester
4486	E-99	53	RGS conduit	0.00	879.42	Pull rope	Soft-Fiber Polyester
4487	E-99	41	RGS conduit	0.00	534.55	Pull rope	Soft-Fiber Polyester
4488	E-99	41	RGS conduit	0.00	534.55	Pull rope	Soft-Fiber Polyester
4489	E-99	41	RGS conduit	0.00 (1)	534.55	Pull rope	Soft-Fiber Polyester (1)
4490	E-99	41	RGS conduit	0.00	534.55	Pull rope	Soft-Fiber Polyester
4491	E-99	53	RGS conduit	690.39	879.42	S-1031-3	1-3/C + gnd #4, 600 V, EPR insulation
						A-1035-3	1-3/C + gnd #6, 600 V, EPR insulation
						Pull rope	Soft-Fiber Polyester
4492	E-99	53	RGS conduit	481.21 (1)	879.42	Pull rope	Soft-Fiber Polyester
						A-1035-4	3 + 1 gnd #6, #8, 600 V, RHH/RHW insulation
						S-1031-4	3 + 1 gnd #4, #8, 600 V, RHH/RHW insulation (1)
4493	E-99	41	RGS conduit	0.00	534.55	Pull rope	Soft-Fiber Polyester
4494	E-99	41	RGS conduit	0.00	534.55	Pull rope	Soft-Fiber Polyester
4501	E-101	53	RGS conduit	0.00	879.42	Pull rope	Soft-Fiber Polyester
4502	E-101	53	RGS conduit	0.00	879.42	Pull rope	Soft-Fiber Polyester
4503	E-101	53	RGS conduit	0.00	879.42	Pull rope	Soft-Fiber Polyester
4504	E-101	53	RGS conduit	0.00	879.42	Pull rope	Soft-Fiber Polyester

For continuation, see next sheet.

CONDUIT AND TRAY SCHEDULE

E-437

CALCULATED/ DESIGNED BY	DATE	REVISED BY
CHECKED BY	8/02	AB
PBP	DATE	REVISED

DESIGN OVERSIGHT
BEHZAD GOLEMOHAMMADI

STATE OF CALIFORNIA - DEPARTMENT OF TRANSPORTATION
Caltrans

FOR REDUCED PLANS ORIGINAL SCALE IS IN MILLIMETERS 0 20 40 60 80

DGN FILE =>T:\13103\MS\pse\SAS Struc\CCO\SAS CC042\04-0120f1_0392R01.dgn
USERNAME =>llorico

CU 04251 EA 0120F1

LAST REVISION 00-00-00
DATE PLOTTED => 3/17/2008
TIME PLOTTED => 5:40:41 PM

CONDUIT DATA

Conduit No	Reference	Size	Type	Total Fill (mm²)	Allowable Fill (mm²)	Included Cable No.	Conductor Type
4505	E-100	41	RGS conduit	0.00	534.55	Pull rope	Soft-Fiber Polyester
4506	E-100	41	RGS conduit	0.00	534.55	Pull rope	Soft-Fiber Polyester
4507	E-101	41	RGS conduit	0.00	534.55	Pull rope	Soft-Fiber Polyester
4508	E-99	41	RGS conduit	0.00	534.55	Pull rope	Soft-Fiber Polyester
4509	E-99	53	RGS conduit	0.00	879.42	Pull rope	Soft-Fiber Polyester
4510	E-99	53	RGS conduit	0.00	879.42	Pull rope	Soft-Fiber Polyester
4511	E-100	41	RGS conduit	0.00	534.55	Pull rope	Soft-Fiber Polyester
4512	E-100	41	RGS conduit	0.00	534.55	Pull rope	Soft-Fiber Polyester
4513	E-100	41	RGS conduit	0.00	534.55	Pull rope	Soft-Fiber Polyester
4514	E-100	41	RGS conduit	0.00	534.55	Pull rope	Soft-Fiber Polyester
4515	E-100	53	RGS conduit	0.00	879.42	Pull rope	Soft-Fiber Polyester
4516	E-100	53	RGS conduit	0.00	879.42	Pull rope	Soft-Fiber Polyester
4517	E-100	41	RGS conduit	0.00	534.55	Pull rope	Soft-Fiber Polyester
4518	E-100	41	RGS conduit	0.00	534.55	Pull rope	Soft-Fiber Polyester
4519	E-100	41	RGS conduit	0.00	534.55	Pull rope	Soft-Fiber Polyester
4520	E-100	41	RGS conduit	0.00	534.55	Pull rope	Soft-Fiber Polyester
4521	E-100	53	RGS conduit	481.21 (1)	879.42	Pull rope	Soft-Fiber Polyester
						S-1031-4	3 + 1 gnd #4, #8, 600 V, RHH/RHW insulation
						A-1035-4	3 + 1 gnd #6, #8, 600 V, RHH/RHW insulation (1)
4522	E-100	53	RGS conduit	176.28 (1)	879.42	Pull rope	Soft-Fiber Polyester
						A-1035-4	3 + 1 gnd #6, #8, 600 V, RHH/RHW insulation (1)
4523	E-100	41	RGS conduit	0.00	534.55	Pull rope	Soft-Fiber Polyester
4524	E-100	41	RGS conduit	0.00	534.55	Pull rope	Soft-Fiber Polyester
4525	E-100	53	RGS conduit	324.29	879.42	A-1013-2	1-3/C + gnd #6, 600 V, EPR insulation
						Pull rope	Soft-Fiber Polyester
4526	E-100	53	RGS conduit	648.58	879.42	A-1014-2	1-3/C + gnd #6, 600 V, EPR insulation
						Pull rope	Soft-Fiber Polyester
						A-1014-2	1-3/C + gnd #6, 600 V, EPR insulation
4527	E-100	41	RGS conduit	0.00	534.55	Pull rope	Soft-Fiber Polyester
4528	E-100	41	RGS conduit	0.00	534.55	Pull rope	Soft-Fiber Polyester
4530	E-100	53	RGS conduit	0.00	879.42	Pull rope	Soft-Fiber Polyester
4531	E-100	41	RGS conduit	0.00	534.55	Pull rope	Soft-Fiber Polyester
4532	E-100	41	RGS conduit	0.00	534.55	Pull rope	Soft-Fiber Polyester
4533	E-100	53	RGS conduit	0.00	879.42	Pull rope	Soft-Fiber Polyester
4534	E-100	53	RGS conduit	0.00	879.42	Pull rope	Soft-Fiber Polyester
4535	E-100	41	RGS conduit	0.00	534.55	Pull rope	Soft-Fiber Polyester
4536	E-100	41	RGS conduit	0.00	534.55	Pull rope	Soft-Fiber Polyester
4537	E-100	41	RGS conduit	0.00	534.55	Pull rope	Soft-Fiber Polyester
4538	E-100	41	RGS conduit	0.00	534.55	Pull rope	Soft-Fiber Polyester
4539	E-100	53	RGS conduit	0.00	879.42	Pull rope	Soft-Fiber Polyester
4540	E-100	53	RGS conduit	0.00	879.42	Pull rope	Soft-Fiber Polyester
4541	E-100	41	RGS conduit	0.00	534.55	Pull rope	Soft-Fiber Polyester
4542	E-100	41	RGS conduit	0.00	534.55	Pull rope	Soft-Fiber Polyester

CALCULATED/ DESIGNED BY	CHECKED BY
PBP	AB
DATE 8/02	8/02

REVISED BY	DATE REVISED

DESIGN OVERSIGHT
BEHZAD COLEMOHAMMADI

STATE OF CALIFORNIA - DEPARTMENT OF TRANSPORTATION
Caltrans

REQUEST FOR INFORMATION NOT ADDRESSED IN THIS CCO REMAIN IN FORCE

MARK	DATE	DESCRIPTIONS	BY	CH'D	CCO#
1	02/19/08	ELECTRICAL MODIFICATIONS	MP EL	RR	42

REVISIONS

CONTRACT CHANGE ORDER NO._____
SHEET _____ OF _____

REGISTERED PROFESSIONAL ENGINEER — MANNELL FUMIO TAKAKI — No E 8651 — Exp. 9/30/2008 ELECTRICAL — STATE OF CALIFORNIA

FOR REVISION ONLY

Caltrans Metric

DIST	COUNTY	ROUTE	KILOMETER POST TOTAL PROJECT	SHEET No	TOTAL SHEETS
04	SF	80	13.2/13.9	393R1	1204

Jens Erlingsson 12/19/02
REGISTERED ELECTRICAL ENGINEER DATE

REGISTERED PROFESSIONAL ENGINEER — JENS ERLINGSSON — No. 8249 — Exp. 9/30/06 ELECTRICAL — STATE OF CALIFORNIA

12-6-04
PLANS APPROVAL DATE

PB POWER, Inc.
A Parsons Brinckerhoff Company
303 Second St., Suite 700N
San Francisco, CA 94107-1317

The State of California or its officers or agents shall not be responsible for the accuracy or completeness of electronic copies of this plan sheet.

Caltrans now has a web site! To get to the web site, go to http://www.dot.ca.gov

CONDUIT DATA

Conduit No	Reference	Size	Type	Total Fill (mm²)	Allowable Fill (mm²)	Included Cable No.	Conductor Type
4543	E-100	41	RGS conduit	227.46	534.55	Pull rope	Soft-Fiber Polyester
						UP108-2	1-2/C + gnd #8, 600 V, EPR insulation
4544	E-100	41	RGS conduit	0.00	534.55	Pull rope	Soft-Fiber Polyester
4545	E-100	53	RGS conduit	454.92	879.42	Pull rope	Soft-Fiber Polyester
						UP108-2A	1-2/C + gnd #8, 600 V, EPR insulation
						UP108-2	1-2/C + gnd #8, 600 V, EPR insulation
4546	E-100	53	RGS conduit	0.00	879.42	Pull rope	Soft-Fiber Polyester
4547	E-100	41	RGS conduit	196.20	534.55	1144	1 - 2 pair, shielded #18 with IS/OA, 300 V, PVC jacket
						Pull rope	Soft-Fiber Polyester
						1146	1 - 2 pair, shielded #18 with IS/OA, 300 V, PVC jacket
4548	E-100	41	RGS conduit	0.00	534.55	Pull rope	Soft-Fiber Polyester
4549	E-100	41	RGS conduit	324.29	534.55	Pull rope	Soft-Fiber Polyester
						1106	1-3/C + gnd #6, 600 V, EPR insulation
						S-1032-2	3 + 1 gnd #6, #8, 600 V, RHH/RHW insulation (1)
4550	E-100	41	RGS conduit	454.92	534.55	UP108-3	1-2/C + gnd #8, 600 V, EPR insulation
						Pull rope	Soft-Fiber Polyester
						UP108-4	1-2/C + gnd #8, 600 V, EPR insulation
4551	E-100	53	RGS conduit	690.39	879.42	S-1032-1	1-3/C + gnd #4, 600 V, EPR insulation
						1106	1-3/C + gnd #6, 600 V, EPR insulation
						Pull rope	Soft-Fiber Polyester
4552	E-100	53	RGS conduit	682.38	879.42	UP108-3	1-2/C + gnd #8, 600 V, EPR insulation
						Pull rope	Soft-Fiber Polyester
						UP108-4	1-2/C + gnd #8, 600 V, EPR insulation
						UP108-4A	1-2/C + gnd #8, 600 V, EPR insulation
4553	E-100	41	RGS conduit	196.20	534.55	1145	1 - 2 pair, shielded #18 with IS/OA, 300 V, PVC jacket
						Pull rope	Soft-Fiber Polyester
						1147	1 - 2 pair, shielded #18 with IS/OA, 300 V, PVC jacket
4554	E-100	41	RGS conduit	0.00	534.55	Pull rope	Soft-Fiber Polyester
4555	E-100	53	RGS conduit	648.58	879.42	Pull rope	Soft-Fiber Polyester
						A-1014-2	1-3/C + gnd #6, 600 V, EPR insulation
						A-1014-2	1-3/C + gnd #6, 600 V, EPR insulation
4556	E-100	103	RGS conduit	0.00	2576.49	Pull rope	Soft-Fiber Polyester
4557	E-101	53	RGS conduit	0.00	879.42	Pull rope	Soft-Fiber Polyester
4558	E-101	53	RGS conduit	0.00	879.42	Pull rope	Soft-Fiber Polyester
4749	E-99	53	RGS conduit	227.46	879.42	Pull rope	Soft-Fiber Polyester
						UP107-3	1-2/C + gnd #8, 600 V, EPR insulation
5001	E-71	78	RGS-PVC coated conduit	98.42	1935.24	UP205-5	2 + 1 gnd #12,#12, 600 V, RHH/RHW insulation
						UP204-5	2 + 1 gnd #12,#12, 600 V, RHH/RHW insulation
						Pull rope	Soft-Fiber Polyester

For continuation, see next sheet.

CONDUIT AND TRAY SCHEDULE

E-438

LAST REVISION 00-00-00
DATE PLOTTED => 3/17/2008
TIME PLOTTED => 5:41:02 PM

FOR REDUCED PLANS ORIGINAL SCALE IS IN MILLIMETERS 0 20 40 60 80

DGN FILE =>T:\13103\MS\pse\SAS Struc\CCO\SAS CCO42\04-0120f1_0393R01.dgn
USERNAME =>llorico

CU 04251

EA 0120F1

CONDUIT DATA

Conduit No	Reference	Size	Type	Total Fill (mm²)	Allowable Fill (mm²)	Included Cable No.	Conductor Type
5251	E-116	78	RGS-PVC coated conduit	0.00	1935.24	Pull rope	Soft-Fiber Polyester
5261	E-117	78	RGS conduit	648.58	1935.24	LP222-2,4	1-3/C + gnd #6, 600 V, EPR insulation
						Pull rope	Soft-Fiber Polyester
						LP222-6,8	1-3/C + gnd #6, 600 V, EPR insulation
5262	E-117	78	RGS conduit	0.00	1935.24	Pull rope	Soft-Fiber Polyester
5263	E-117	78	RGS conduit	1108.98	1935.24	UP207-7	1-2/C + gnd #8, 600 V, EPR insulation
						2098	1-3/C + gnd #2, 600 V, EPR insulation
						UP207-1	1-2/C + gnd #10, 600 V, EPR insulation
						Pull rope	Soft-Fiber Polyester
						UP207-8	1-2/C + gnd #8, 600 V, EPR insulation
5264	E-117	78	RGS conduit	0.00	1935.24	Pull rope	Soft-Fiber Polyester
5265	E-117	78	RGS conduit	527.18	1935.24	Pull rope	Soft-Fiber Polyester
						2106	1-3/C + gnd #2, 600 V, EPR insulation
5266	E-117	78	RGS conduit	0.00	1935.24	Pull rope	Soft-Fiber Polyester
5267	E-117	78	RGS conduit	1201.71	1935.24	Pull rope	Soft-Fiber Polyester
						1474-8	50 pair #18, shielded pairs, IS/OS shield 600 V, XLPE insul., PVC jacket
5269	E-117	78	RGS-PVC coated conduit	30.19	1935.24	2475-3C	12 Fiber, single mode fiberoptic cable
						Pull rope	Soft-Fiber Polyester
5270	E-117	78	RGS-PVC coated conduit	1201.71	1935.24	Pull rope	Soft-Fiber Polyester
						1473-7	50 pair #18, shielded pairs, IS/OS shield 600 V, XLPE insul., PVC jacket
5271	E-117	78	RGS-PVC coated conduit	1201.71	1935.24	Pull rope	Soft-Fiber Polyester
						1474-7	50 pair #18, shielded pairs, IS/OS shield 600 V, XLPE insul., PVC jacket
5272	E-117	78	RGS-PVC coated conduit	1201.71	1935.24	1473-8	50 pair #18, shielded pairs, IS/OS shield 600 V, XLPE insul., PVC jacket
						Pull rope	Soft-Fiber Polyester
5273	E-117	78	RGS-PVC coated conduit	0.00	1935.24	Pull rope	Soft-Fiber Polyester
5274	E-117	78	RGS-PVC coated conduit	150.44	1935.24	MVDSE03A	MVDS DLC
						Pull rope	Soft-Fiber Polyester
5275	E-118	78	RGS-PVC coated conduit	1201.71	1935.24	2474-10	50 pair #18, shielded pairs, IS/OS shield 600 V, XLPE insul., PVC jacket
						Pull rope	Soft-Fiber Polyester
5276	E-118	78	RGS-PVC coated conduit	0.00	1935.24	Pull rope	Soft-Fiber Polyester
5277	E-118	78	RGS-PVC coated conduit	1201.71	1935.24	1473-8	50 pair #18, shielded pairs, IS/OS shield 600 V, XLPE insul., PVC jacket
5281	E-118	78	RGS conduit	307.37	1935.24	2210-5	1-3/C #14, 600 V, EPR insulation
						Pull rope	Soft-Fiber Polyester
						2201-3	1-3/C #14, 600 V, EPR insulation
						2201-4	1-9/C #16, 600 V, EPR insulation
5282	E-118	78	RGS conduit	98.10	1935.24	S-3056-9	1-4/C #14, 600 V, EPR insulation
						Pull rope	Soft-Fiber Polyester
5283	E-118	78	RGS conduit	1630.68	1935.24	UP208-8	1-2/C + gnd #8, 600 V, EPR insulation
						Pull rope	Soft-Fiber Polyester
						LP223-2,4	1-3/C + gnd #6, 600 V, EPR insulation
						LP223-6,8	1-3/C + gnd #6, 600 V, EPR insulation
						UP208-7	1-2/C + gnd #8, 600 V, EPR insulation
						2099	1-3/C + gnd #2, 600 V, EPR insulation
5284	E-118	78	RGS conduit	682.38	1935.24	UP208-2	1-2/C + gnd #8, 600 V, EPR insulation
						Pull rope	Soft-Fiber Polyester
						UP208-4	1-2/C + gnd #8, 600 V, EPR insulation
						UP208-6	1-2/C + gnd #8, 600 V, EPR insulation
5285	E-118	78	RGS conduit	527.18	1935.24	2107	1-3/C + gnd #2, 600 V, EPR insulation
						Pull rope	Soft-Fiber Polyester

REQUEST FOR INFORMATION NOT ADDRESSED IN THIS CCO REMAIN IN FORCE

MARK	DATE	DESCRIPTIONS	BY	CH'D	CCO#
		REVISIONS			
1	02/19/08	ELECTRICAL MODIFICATIONS	MP EL	RR	42

CONTRACT CHANGE ORDER NO. _____
SHEET _____ OF _____

REGISTERED PROFESSIONAL ENGINEER — MANNELL FUMIO TAKATA — No. E 8651 — Exp. 9/30/2008 — ELECTRICAL — STATE OF CALIFORNIA

FOR REVISION ONLY

Caltrans Metric

DIST	COUNTY	ROUTE	KILOMETER POST TOTAL PROJECT	SHEET No	TOTAL SHEETS
04	SF	80	13.2/13.9	396R1	1204

12/19/02
REGISTERED ELECTRICAL ENGINEER DATE

REGISTERED PROFESSIONAL ENGINEER — JENS ERLINGSSON — No. 8249 — Exp. 9/30/06 — ELECTRICAL — STATE OF CALIFORNIA

12-6-04
PLANS APPROVAL DATE

PB POWER, Inc.
A Parsons Brinckerhoff Company
303 Second St., Suite 700N
San Francisco, CA 94107-1317

The State of California or its officers or agents shall not be responsible for the accuracy or completeness of electronic copies of this plan sheet.

Caltrans now has a web site! To get to the web site, go to http://www.dot.ca.gov

CONDUIT DATA

Conduit No	Reference	Size	Type	Total Fill (mm²)	Allowable Fill (mm²)	Included Cable No.	Conductor Type
5286	E-118	78	RGS conduit	1496.01	1935.24	2154	1 - 2 pair, shielded #18 with IS/OA, 300 V, PVC jacket
						2152	1 - 2 pair, shielded #18 with IS/OA, 300 V, PVC jacket
						2153	1 - 2 pair, shielded #18 with IS/OA, 300 V, PVC jacket
						1474-10	50 pair #18, shielded pairs, IS/OS shield 600 V, XLPE insul., PVC jacket
						Pull rope	Soft-Fiber Polyester
5287	E-118	78	RGS conduit	0.00	1935.24	Pull rope	Soft-Fiber Polyester
5289	E-118	78	RGS-PVC coated conduit	1201.71	1935.24	Pull rope	Soft-Fiber Polyester
						1473-10	50 pair #18, shielded pairs, IS/OS shield 600 V, XLPE insul., PVC jacket
5290	E-118	78	RGS-PVC coated conduit	1519.51	1935.24	1474-8A	1 - 6 pair, shielded #18 with overall shield, 300 V, PVC jacket
						1474-8B	1 - 6 pair, shielded #18 with overall shield, 300 V, PVC jacket
						1474-8	50 pair #18, shielded pairs, IS/OS shield 600 V, XLPE insul., PVC jacket
						Pull rope	Soft-Fiber Polyester
5299	E-182	41	RGS conduit	425.70	534.55	A-3032-2	3 + 1 gnd #6,#8, 600 V, RHH/RHW insulation
						A-3033-2	3 + 1 gnd #6,#8, 600 V, RHH/RHW insulation
5301	E-181	41	RGS conduit	0.00	534.55	Pull rope	Soft-Fiber Polyester
5302	E-181	41	RGS conduit	0.00	534.55	Pull rope	Soft-Fiber Polyester
5303	E-181	53	RGS conduit	648.58	879.42	A-3040-3	1-3/C + gnd #6, 600 V, EPR insulation
						Pull rope	Soft-Fiber Polyester
						A-3039-3	1-3/C + gnd #6, 600 V, EPR insulation
5304	E-181	53	RGS conduit	0.00	879.42	Pull rope	Soft-Fiber Polyester
5305	E-181	41	RGS conduit	212.85	534.55	Pull rope	Soft-Fiber Polyester
						LP219-2,4A	3 + 1 gnd #6,#8, 600 V, RHH/RHW insulation
5306	E-181	41	RGS conduit	440.31	534.55	UP205-6	1-2/C + gnd #8, 600 V, EPR insulation
						Pull rope	Soft-Fiber Polyester
						LP219-6,8A	3 + 1 gnd #6,#8, 600 V, RHH/RHW insulation
5307	E-181	53	RGS conduit	324.29	879.42	LP219-2,4	1-3/C + gnd #6, 600 V, EPR insulation
						Pull rope	Soft-Fiber Polyester
5308	E-181	53	RGS conduit	551.75	879.42	UP205-6	1-2/C + gnd #8, 600 V, EPR insulation
						Pull rope	Soft-Fiber Polyester
						LP219-6,8	1-3/C + gnd #6, 600 V, EPR insulation
5309	E-181	53	RGS conduit	98.10	879.42	Pull rope	Soft-Fiber Polyester
						2155	1 - 2 pair, shielded #18 with IS/OA, 300 V, PVC jacket
5310	E-181	53	RGS conduit	0.00	879.42	Pull rope	Soft-Fiber Polyester
5311	E-181	41	RGS conduit	126.88 (1)	534.55	S-2031-2	3 + 1 gnd #6,#8, 600 V, RHH/RHW insulation
						Pull rope	Soft-Fiber Polyester
						UP204-1	1-2/C + gnd #10, 600 V, EPR insulation

For continuation, see next sheet.

CONDUIT AND TRAY SCHEDULE

E-441

DESIGN OVERSIGHT — BEHZAD GOLEMOHAMMADI

STATE OF CALIFORNIA - DEPARTMENT OF TRANSPORTATION — Caltrans

REVISED BY	DATE REVISED
DATE 8/02	8/02
PBP	AB
CALCULATED/ DESIGNED BY	CHECKED BY

LAST REVISION 00-00-00 — DATE PLOTTED => 3/17/2008 — TIME PLOTTED => 5:41:20 PM

FOR REDUCED PLANS ORIGINAL SCALE IS IN MILLIMETERS 0 20 40 60 80

DGN FILE =>T:\13103\MS\pse\SAS Struc\CCO\SAS CCO42\04-0120f1_0396R01.dgn
USERNAME =>llorico

CU 04251

EA 0120F1

CONDUIT DATA

Conduit No	Reference	Size	Type	Total Fill (mm²)	Allowable Fill (mm²)	Included Cable No.	Conductor Type
5312	E-181	41	RGS conduit	0.00 (1)	534.55	Pull rope	Soft-Fiber Polyester
5313	E-181	78	RGS conduit	654.06	1935.24	UP204-1	1-2/C + gnd #10, 600 V, EPR insulation
						S-2031-1	1-3/C + gnd #2, 600 V, EPR insulation
						Pull rope	Soft-Fiber Polyester
5314	E-181	53	RGS conduit	648.58	879.42	A-2035-1	1-3/C + gnd #6, 600 V, EPR insulation
						Pull rope	Soft-Fiber Polyester
5315	E-181	53	RGS conduit	0.00	879.42	Pull rope	Soft-Fiber Polyester
5316	E-181	53	RGS conduit	0.00	879.42	Pull rope	Soft-Fiber Polyester
5317	E-181	78	RGS conduit	527.18	1935.24	A-2011-1	1-3/C + gnd #2, 600 V, EPR insulation
						Pull rope	Soft-Fiber Polyester
5320	E-185	78	RGS conduit	0.00	1935.24	Pull rope	Soft-Fiber Polyester
5321	E-181	41	RGS conduit	0.00	534.55	Pull rope	Soft-Fiber Polyester
5322	E-181	41	RGS conduit	0.00	534.55	Pull rope	Soft-Fiber Polyester
5323	E-181	53	RGS conduit	0.00	879.42	Pull rope	Soft-Fiber Polyester
5324	E-181	53	RGS conduit	0.00	879.42	Pull rope	Soft-Fiber Polyester
5325	E-181	53	RGS conduit	0.00	879.42	Pull rope	Soft-Fiber Polyester
5326	E-181	53	RGS conduit	0.00	879.42	Pull rope	Soft-Fiber Polyester
5333	E-182	41	RGS conduit	212.85	534.55	Pull rope	Soft-Fiber Polyester
						LP220-2,4A	3 + 1 gnd #6,#8, 600 V, RHH/RHW insulation
5334	E-182	41	RGS conduit	0.00	534.55	Pull rope	Soft-Fiber Polyester
5335	E-182	53	RGS conduit	324.29	879.42	Pull rope	Soft-Fiber Polyester
						LP220-2,4	1-3/C + gnd #6, 600 V, EPR insulation
5336	E-182	53	RGS conduit	0.00	879.42	Pull rope	Soft-Fiber Polyester
5337	E-182	53	RGS conduit	0.00	879.42	Pull rope	Soft-Fiber Polyester
5338	E-182	53	RGS conduit	0.00	879.42	Pull rope	Soft-Fiber Polyester
5346	E-185	53	RGS conduit	366.10	879.42	Pull rope	Soft-Fiber Polyester
						A-3031-1	1-3/C + gnd #4, 600 V, EPR insulation
5347	E-185	53	RGS conduit	0.00	879.42	Pull rope	Soft-Fiber Polyester
5348	E-181	41	RGS conduit	212.85	534.55	Pull rope	Soft-Fiber Polyester
						A-3031-2	3 + 1 gnd #6,#8, 600 V, RHH/RHW insulation
5349	E-181	41	RGS conduit	212.85	534.55	Pull rope	Soft-Fiber Polyester
						A-2011-2	3 + 1 gnd #6,#8, 600 V, RHH/RHW insulation
5350	E-185	53	RGS conduit	0.00	879.42	Pull rope	Soft-Fiber Polyester
5351	E-182	41	RGS conduit	0.00	534.55	Pull rope	Soft-Fiber Polyester
5352	E-182	41	RGS conduit	212.85	534.55	Pull rope	Soft-Fiber Polyester
						LP220-6,8A	3 + 1 gnd #6,#8, 600 V, RHH/RHW insulation
5353	E-182	53	RGS conduit	0.00	879.42	Pull rope	Soft-Fiber Polyester
5354	E-182	53	RGS conduit	324.29	879.42	Pull rope	Soft-Fiber Polyester
						LP220-6,8	1-3/C + gnd #6, 600 V, EPR insulation
5355	E-182	53	RGS conduit	0.00	879.42	Pull rope	Soft-Fiber Polyester
5356	E-182	53	RGS conduit	0.00	879.42	Pull rope	Soft-Fiber Polyester
5357	E-182	41	RGS conduit	212.85	534.55	A-3039-2	3 + 1 gnd #6,#8, 600 V, RHH/RHW insulation
						Pull rope	Soft-Fiber Polyester
5358	E-182	41	RGS conduit	0.00	534.55	Pull rope	Soft-Fiber Polyester
5359	E-182	53	RGS conduit	851.47	879.42	A-3039-3	1-3/C + gnd #6, 600 V, EPR insulation
						A-3039-1	1-3/C + gnd #2, 600 V, EPR insulation
						Pull rope	Soft-Fiber Polyester
5360	E-182	53	RGS conduit	648.58	879.42	Pull rope	Soft-Fiber Polyester
						A-3039-3	1-3/C + gnd #6, 600 V, EPR insulation
						A-3040-3	1-3/C + gnd #6, 600 V, EPR insulation

REQUEST FOR INFORMATION NOT ADDRESSED IN THIS CCO REMAIN IN FORCE

MARK	DATE	DESCRIPTIONS	MP EL BY	RR CH'D	42 CCO#
		REVISIONS			
1	02/19/08	ELECTRICAL MODIFICATIONS			

CONTRACT CHANGE ORDER NO. _____
SHEET _____ OF _____

REGISTERED PROFESSIONAL ENGINEER — MANNELL FUMIO TAKARA — No. E 8651 — Exp. 9/30/2008 ELECTRICAL — STATE OF CALIFORNIA

FOR REVISION ONLY

Caltrans Metric

DIST	COUNTY	ROUTE	KILOMETER POST TOTAL PROJECT	SHEET No	TOTAL SHEETS
04	SF	80	13.2/13.9	397R1	1204

Jens Ellingsson 12/19/02
REGISTERED ELECTRICAL ENGINEER DATE

12-6-04
PLANS APPROVAL DATE

REGISTERED PROFESSIONAL ENGINEER — JENS ERLINGSSON — No. 8249 — Exp. 9/30/06 ELECTRICAL — STATE OF CALIFORNIA

PB POWER, Inc.
A Parsons Brinckerhoff Company
303 Second St., Suite 700N
San Francisco, CA 94107-1317

The State of California or its officers or agents shall not be responsible for the accuracy or completeness of electronic copies of this plan sheet.

Caltrans now has a web site! To get to the web site, go to http://www.dot.ca.gov

CONDUIT DATA

Conduit No	Reference	Size	Type	Total Fill (mm²)	Allowable Fill (mm²)	Included Cable No.	Conductor Type
5363	E-182	41	RGS conduit	212.85	534.55	A-2012-2	3 + 1 gnd #6, #8, 600 V, RHH/RHW insulation
						Pull rope	Soft-Fiber Polyester
5364	E-182	41	RGS conduit	227.46	534.55	Pull rope	Soft-Fiber Polyester
						UP205-4	1-2/C + gnd #8,600 V, EPR insulation
5365	E-182	53	RGS conduit	227.46	879.42	UP205-4	1-2/C + gnd #8,600 V, EPR insulation
						Pull rope	Soft-Fiber Polyester
5366	E-182	53	RGS conduit	527.18	879.42	A-2012-1	1-3/C + gnd #2, 600 V, EPR insulation
						Pull rope	Soft-Fiber Polyester
5367	E-182	53	RGS conduit	196.20	879.42	2155	1 - 2 pair, shielded #18 with IS/OA , 300V, PVC jacket
						Pull rope	Soft-Fiber Polyester
						2146	1 - 2 pair, shielded #18 with IS/OA , 300V, PVC jacket
5368	E-182	53	RGS conduit	0.00	879.42	Pull rope	Soft-Fiber Polyester
5369	E-182	53	RGS conduit	227.46	879.42	Pull rope	Soft-Fiber Polyester
						UP205-2	1-2/C + gnd #8,600 V, EPR insulation
5370	E-182	53	RGS conduit	0.00	879.42	Pull rope	Soft-Fiber Polyester
5371	E-182	53	RGS conduit	227.46	879.42	UP205-2	1-2/C + gnd #8,600 V, EPR insulation
						Pull rope	Soft-Fiber Polyester
5372	E-182	53	RGS conduit	0.00	879.42	Pull rope	Soft-Fiber Polyester
5373	E-182	53	RGS conduit	98.10	879.42	2145	1 - 2 pair, shielded #18 with IS/OA, 300V, PVC jacket
						Pull rope	Soft-Fiber Polyester
5374	E-182	53	RGS conduit	0.00	879.42	Pull rope	Soft-Fiber Polyester
5375	E-182	53	RGS conduit	0.00	879.42	Pull rope	Soft-Fiber Polyester
5378	E-185	78	RGS conduit	0.00	1935.24	Pull rope	Soft-Fiber Polyester
5379	E-185	78	RGS conduit	0.00	1935.24	Pull rope	Soft-Fiber Polyester
5380	E-182	53	RGS conduit	0.00	879.42	Pull rope	Soft-Fiber Polyester
5381	E-182	41	RGS conduit	0.00	534.55	Pull rope	Soft-Fiber Polyester
5382	E-182	41	RGS conduit	0.00	534.55	Pull rope	Soft-Fiber Polyester
5383	E-182	78	RGS conduit	0.00	1935.24	Pull rope	Soft-Fiber Polyester
5384	E-182	53	RGS conduit	0.00	879.42	Pull rope	Soft-Fiber Polyester
5385	E-182	53	RGS conduit	0.00	879.42	Pull rope	Soft-Fiber Polyester
5386	E-182	53	RGS conduit	0.00	879.42	Pull rope	Soft-Fiber Polyester
5387	E-182	41	RGS conduit	212.85	534.55	A-3040-2	3 + 1 gnd #6,#8, 600 V, RHH/RHW insulation
						Pull rope	Soft-Fiber Polyester

For continuation, see next sheet.

CONDUIT AND TRAY SCHEDULE

E-442

REVISED BY	DATE REVISED
PBP	8/02

CALCULATED/DESIGNED BY: AB
CHECKED BY: DATE 8/02

DESIGN OVERSIGHT: BEHZAD GOLEMOHAMMADI

STATE OF CALIFORNIA - DEPARTMENT OF TRANSPORTATION
Caltrans

FOR REDUCED PLANS ORIGINAL SCALE IS IN MILLIMETERS 0 20 40 60 80

DGN FILE =>T:\13103\MS\pse\SAS Struc\CCO\SAS CC042\04-0120f1_0397R01.dgn
USERNAME =>llorico

CU 04251

EA 0120F1

DATE PLOTTED => 3/17/2008
TIME PLOTTED => 5:41:40 PM

LAST REVISION 00-00-00

CONDUIT DATA

Conduit No	Reference	Size	Type	Total Fill (mm²)	Allowable Fill (mm²)	Included Cable No.	Conductor Type
5456	E-184	53	RGS conduit	366.10	879.42	A-3036-1	1-3/C + gnd #4 , 600 V, EPR insulation
						Pull rope	Soft-Fiber Polyester
5457	E-184	53	RGS conduit	98.10	879.42	2149	1 - 2 pair, shielded #18 with IS/OA, 300 V, PVC jacket
						Pull rope	Soft-Fiber Polyester
5458	E-184	53	RGS conduit	0.00	879.42	Pull rope	Soft-Fiber Polyester
5459	E-184	41	RGS conduit	0.00	534.55	Pull rope	Soft-Fiber Polyester
5460	E-184	41	RGS conduit	227.46	534.55	Pull rope	Soft-Fiber Polyester
						UP208-2A	1-2/C + gnd #8, 600 V, EPR insulation
5461	E-184	53	RGS conduit	0.00	879.42	Pull rope	Soft-Fiber Polyester
5462	E-184	53	RGS conduit	227.46	879.42	Pull rope	Soft-Fiber Polyester
						UP208-2A	1-2/C + gnd #8, 600 V, EPR insulation
5463	E-184	53	RGS conduit	98.10	879.42	2148	1 - 2 pair, shielded #18 with IS/OA, 300 V, PVC jacket
						Pull rope	Soft-Fiber Polyester
5464	E-184	53	RGS conduit	0.00	879.42	Pull rope	Soft-Fiber Polyester
5465	E-184	53	RGS conduit	0.00	879.42	Pull rope	Soft-Fiber Polyester
5466	E-184	53	RGS conduit	0.00	879.42	Pull rope	Soft-Fiber Polyester
5471	E-184	41	RGS conduit	212.85	534.55	Pull rope	Soft-Fiber Polyester
						LP222-2,4A	3 + 1 gnd #6, #8, 600 V, RHH/RHW insulation
5472	E-184	41	RGS conduit	212.85	534.55	Pull rope	Soft-Fiber Polyester
						LP222-6,8A	3 + 1 gnd #6, #8, 600 V, RHH/RHW insulation
5473	E-184	53	RGS conduit	324.29	879.42	Pull rope	Soft-Fiber Polyester
						LP222-2,4	1-3/C + gnd #6, 600 V, EPR insulation
5474	E-184	53	RGS conduit	324.29	879.42	Pull rope	Soft-Fiber Polyester
						LP222-6,8	1-3/C + gnd #6, 600 V, EPR insulation
5475	E-184	53	RGS conduit	0.00	879.42	Pull rope	Soft-Fiber Polyester
5476	E-184	53	RGS conduit	0.00	879.42	Pull rope	Soft-Fiber Polyester
5477	E-184	41	RGS conduit	0.00	534.55	Pull rope	Soft-Fiber Polyester
5478	E-184	41	RGS conduit	0.00	534.55	Pull rope	Soft-Fiber Polyester
5479	E-184	53	RGS conduit	0.00	879.42	Pull rope	Soft-Fiber Polyester
5480	E-184	53	RGS conduit	0.00	879.42	Pull rope	Soft-Fiber Polyester
5481	E-184	53	RGS conduit	0.00	879.42	Pull rope	Soft-Fiber Polyester
5482	E-184	53	RGS conduit	0.00	879.42	Pull rope	Soft-Fiber Polyester
5483	E-184	41	RGS conduit	0.00	534.55	Pull rope	Soft-Fiber Polyester
5484	E-184	41	RGS conduit	0.00	534.55	Pull rope	Soft-Fiber Polyester
5485	E-184	53	RGS conduit	0.00	879.42	Pull rope	Soft-Fiber Polyester
5486	E-184	53	RGS conduit	0.00	879.42	Pull rope	Soft-Fiber Polyester
5487	E-184	53	RGS conduit	0.00	879.42	Pull rope	Soft-Fiber Polyester
5488	E-184	53	RGS conduit	0.00	879.42	Pull rope	Soft-Fiber Polyester
5489	E-184	41	RGS conduit	268.36	534.55	S-2031-4	3 + 1 gnd #4,#8, 600 V, RHH/RHW insulation
						Pull rope	Soft-Fiber Polyester
5490	E-184	41	RGS conduit	212.85	534.55	Pull rope	Soft-Fiber Polyester
						A-2035-4	3 + 1 gnd #6,#8, 600 V, RHH/RHW insulation
5491	E-184	53	RGS conduit	0.00	879.42	Pull rope	Soft-Fiber Polyester
5492	E-184	53	RGS conduit	0.00	879.42	Pull rope	Soft-Fiber Polyester

1

REQUEST FOR INFORMATION NOT ADDRESSED IN THIS CCO REMAIN IN FORCE

MARK	DATE	REVISIONS	MP EL	RR BY	42 CH'D	CCO#
1	02/19/08	ELECTRICAL MODIFICATIONS				

CONTRACT CHANGE ORDER NO. _____
SHEET _____ OF _____

REGISTERED PROFESSIONAL ENGINEER
MARRELL FUMIO TAKATA
No. E 8651
Exp. 9/30/2008
ELECTRICAL
STATE OF CALIFORNIA

FOR REVISION ONLY

Caltrans Metric

DIST	COUNTY	ROUTE	KILOMETER POST TOTAL PROJECT	SHEET No	TOTAL SHEETS
04	SF	80	13.2/13.9	399R1	1204

Jens Erlingsson 12/19/02
REGISTERED ELECTRICAL ENGINEER DATE

REGISTERED PROFESSIONAL ENGINEER
JENS ERLINGSSON
No. 8249
Exp. 9/30/06
ELECTRICAL
STATE OF CALIFORNIA

12-6-04
PLANS APPROVAL DATE

PB POWER, Inc.
A Parsons Brinckerhoff Company
303 Second St., Suite 700N
San Francisco, CA 94107-1317

The State of California or its officers or agents shall not be responsible for the accuracy or completeness of electronic copies of this plan sheet.

Caltrans now has a web site! To get to the web site, go to http://www.dot.ca.gov

CONDUIT DATA

Conduit No	Reference	Size	Type	Total Fill (mm²)	Allowable Fill (mm²)	Included Cable No.	Conductor Type
5493	E-184	53	RGS conduit	0.00	879.42	Pull rope	Soft-Fiber Polyester
5494	E-184	53	RGS conduit	0.00	879.42	Pull rope	Soft-Fiber Polyester
5495	E-184	41	RGS conduit	0.00	534.55	Pull rope	Soft-Fiber Polyester
5497	E-184	53	RGS conduit	0.00	879.42	Pull rope	Soft-Fiber Polyester
5498	E-183	53	RGS conduit	0.00	879.42	Pull rope	Soft-Fiber Polyester
5501	E-185	41	RGS conduit	0.00	534.55	Pull rope	Soft-Fiber Polyester
5502	E-185	41	RGS conduit	0.00	534.55	Pull rope	Soft-Fiber Polyester
5503	E-185	53	RGS conduit	0.00	879.42	Pull rope	Soft-Fiber Polyester
5504	E-185	53	RGS conduit	0.00	879.42	Pull rope	Soft-Fiber Polyester
5505	E-185	53	RGS conduit	0.00	879.42	Pull rope	Soft-Fiber Polyester
5506	E-185	53	RGS conduit	0.00	879.42	Pull rope	Soft-Fiber Polyester
5512	E-185	41	RGS conduit	212.85	534.55	Pull rope	Soft-Fiber Polyester
						A-2014-2	3 + 1 gnd #6,#8, 600 V, RHH/RHW insulation
5513	E-185	53	RGS conduit	0.00	879.42	Pull rope	Soft-Fiber Polyester
5514	E-185	53	RGS conduit	0.00	879.42	Pull rope	Soft-Fiber Polyester
5515	E-185	53	RGS conduit	0.00	879.42	Pull rope	Soft-Fiber Polyester
5516	E-185	53	RGS conduit	0.00	879.42	Pull rope	Soft-Fiber Polyester
5517	E-185	53	RGS conduit	0.00	879.42	Pull rope	Soft-Fiber Polyester
5518	E-185	53	RGS conduit	0.00	879.42	Pull rope	Soft-Fiber Polyester
5519	E-185	41	RGS conduit	212.85	534.55	S-2032-2	3 + 1 gnd #6,#8, 600 V, RHH/RHW insulation
						Pull rope	Soft-Fiber Polyester
5520	E-185	41	RGS conduit	0.00	534.55	Pull rope	Soft-Fiber Polyester
5521	E-185	53	RGS conduit	366.10	879.42	Pull rope	Soft-Fiber Polyester
						S-2032-1	1-3/C + gnd #4, 600 V, EPR insulation
5522	E-185	53	RGS conduit	0.00	879.42	Pull rope	Soft-Fiber Polyester
5523	E-185	53	RGS conduit	0.00	879.42	Pull rope	Soft-Fiber Polyester
5524	E-185	53	RGS conduit	0.00	879.42	Pull rope	Soft-Fiber Polyester
5528	E-185	41	RGS conduit	0.00	534.55	Pull rope	Soft-Fiber Polyester

For continuation, see next sheet.

CONDUIT AND TRAY SCHEDULE

E-444

DESIGN OVERSIGHT
BEHZAD GOLEMOHAMMADI

STATE OF CALIFORNIA - DEPARTMENT OF TRANSPORTATION
Caltrans

REVISED BY	DATE REVISED
DATE 8/02	8/02
PBP	AB
CALCULATED/ DESIGNED BY	CHECKED BY

LAST REVISION 00-00-00
DATE PLOTTED => 3/17/2008
TIME PLOTTED => 5:41:58 PM

FOR REDUCED PLANS ORIGINAL SCALE IS IN MILLIMETERS 0 20 40 60 80

DGN FILE =>T:\13103\MS\pse\SAS Struc\CCO\SAS CCO42\04-0120f1_0399R01.dgn
USERNAME =>llorico

CU 04251

EA 0120F1

CONDUIT DATA

Conduit No	Reference	Size	Type	Total Fill (mm²)	Allowable Fill (mm²)	Included Cable No.	Conductor Type
3177A	E-264A	78	Liquidtight flex metal conduit	1853.73	1928.98	2119-B	3+1gnd, #250 kcmil, #1/0, 600V, EPR insulation
						2204-2	1-3/C #16, 600V, EPR Insulation
3177B	E-264A, E-182	78	RGS - PVC co				
3278A	E-264A	78	Liquidtight				
						2910-11	1-3/C #16, 600V, EPR Insulation
3278B	E-264A, E-182	78	RGS - PVC coated conduit	1827.85	1953.24	2123-2	1-3/C + gnd #2/0, 600V, EPR Insulation
						2123-3	1-3/C + gnd #2/0, 600V, EPR Insulation
						2910-11	1-3/C #16, 600V, EPR Insulation
3294A	E-264A	78	Liquidtight flex metal conduit		1928.98	Pull rope	Soft-fiber polyester
3294B	E-264A, E-182	78	RGS - PVC coated conduit		1935.24	Pull rope	Soft-fiber polyester
1 3294C	E-287	41					
3319A	E-264A	78	Liquidtight flex metal conduit	1849.08	1928.98	2121	1-3/C + gnd #1/0, 600V, EPR Insulation
						2121-1	1-3/C #14, 600V, EPR Insulation
						2120	1-3/C + gnd #1/0, 600V, EPR Insulation
						2121-2	1-3/C #14, 600V, EPR Insulation
						2120-1	1-3/C #14, 600V, EPR Insulation
						2120-2	1-3/C #14, 600V, EPR Insulation
3319B	E-264A, E-182	78	RGS - PVC coated conduit	1849.08	1935.24	2121	1-3/C + gnd #1/0, 600V, EPR Insulation
						2121-1	1-3/C #14, 600V, EPR Insulation
						2120	1-3/C + gnd #1/0, 600V, EPR Insulation
						2121-2	1-3/C #14, 600V, EPR Insulation
						2120-1	1-3/C #14, 600V, EPR Insulation
						2120-2	1-3/C #14, 600V, EPR Insulation
3322A	E-264A	78	Liquidtight flex metal conduit	1853.73	1928.98	2119-A	3+1gnd, #250 kcmil, #1/0, 600V, EPR insulation
						2123	1-3/C + gnd #2, 600V, EPR Insulation
						1201-1	1-2/C + gnd #8, 600V, EPR Insulation
						2204-1	1-3/C #16, 600V, EPR Insulation
3322B	E-264A, E-182	78	RGS - PVC coated conduit	1853.73	1935.24	2119-A	3+1gnd, #250 kcmil, #1/0, 600V, EPR insulation
						2123	1-3/C + gnd #2, 600V, EPR Insulation
						1201-1	1-2/C + gnd #8, 600V, EPR Insulation
						2204-1	1-3/C #16, 600V, EPR Insulation
3330A	E-264A	78	Liquidtight flex metal conduit	552.33	1928.98	CCTVE01BA	TVP
						CCTVE01BB	TVCP
						CCTVE01AA	TVP
						CCTVE01AB	TVCP
						GND	1-#250 kcmil, bare copper
3330B	E-264A, E-182	78	RGS - PVC coated conduit	552.33	1935.24	CCTVE01BA	TVP
						CCTVE01BB	TVCP
						CCTVE01AA	TVP
						CCTVE01AB	TVCP
						GND	1-#250 kcmil, bare copper
3339A	E-264A	78	Liquidtight flex metal conduit	1432.01	1928.98	2125	3+1gnd, #250 kcmil, #1/0, 600V, EPR insulation
						1201-6	1-2/C + gnd #8, 600V, EPR Insulation
						GND	1-#250 kcmil, bare copper

The following are review comments for this sheet

1. The conduit references indicate conductors on both side of a conduit run with empty conduit between. See Conduit schedule with comments. E-426, E-429, E-449C. See Sheet E-287.

2. Some of the conduit numbers with suffix of A, B,, etc. do not have contents indicated but some do. Is there a note somewhere explaining this?

REQUEST FOR INFORMATION NOT ADDRESSED IN THIS CCO REMAIN IN FORCE

MARK	DATE	DESCRIPTIONS	MP EL	RR BY	42 CH'D	CCO#
		REVISIONS				
1	02/19/08	ELECTRICAL MODIFICATIONS				

CONTRACT CHANGE ORDER NO. _____
OF _____

REGISTERED PROFESSIONAL ENGINEER — MAXWELL FUMIO TAGAMI — No. E 8651 — Exp. 9/30/2008 ELECTRICAL — STATE OF CALIFORNIA

FOR REVISION ONLY

Caltrans Metric

DIST	COUNTY	ROUTE	KILOMETER POST TOTAL PROJECT	SHEET No	TOTAL SHEETS
04	SF	80	13.2/13.9	407R1	1204

Jens Erlingsson 12/19/02
REGISTERED ELECTRICAL ENGINEER DATE

REGISTERED PROFESSIONAL ENGINEER — JENS ERLINGSSON — No. 8249 — Exp. 9/30/06 ELECTRICAL — STATE OF CALIFORNIA

12-6-04
PLANS APPROVAL DATE

PB POWER, Inc.
A Parsons Brinckerhoff Company
303 Second St., Suite 700N
San Francisco, CA 94107-1317

The State of California or its officers or agents shall not be responsible for the accuracy or completeness of electronic copies of this plan sheet.

Caltrans now has a web site! To get to the web site, go to http://www.dot.ca.gov

CONDUIT DATA

Conduit No	Reference	Size	Type	Total Fill (mm²)	Allowable Fill (mm²)	Included Cable No.	Conductor Type
3339B	E-264A, E-182	78	RGS - PVC coated conduit	1432.01	1935.24	2125	3+1gnd, #250 kcmil, #1/0, 600V, EPR insulation
						1201-6	1-2/C + gnd #8, 600V, EPR Insulation
						GND	1-#250 kcmil, bare copper
3348A	E-264A	78	Liquidtight flex metal conduit		1928.98	Pull rope	Soft-fiber polyester
3348B	E-264A, E-182	78	RGS - PVC coated conduit		1935.24	Pull rope	Soft-fiber polyester
3349A	E-264A	78	Liquidtight flex metal conduit		1928.98	Pull rope	Soft-fiber polyester
3349B	E-264A, E-182	78	RGS - PVC coated conduit		1935.24	Pull rope	Soft-fiber polyester
3359A	E-264A	78	Liquidtight flex metal conduit	648.52	1928.98	CCTVE01AC	TVC
						CCTVE01AD	TVL
						MVDSE02A	MVDS DLC
						MVDSE03A	MVDS DLC
						CCTVE01BC	TVC
						CCTVE01BD	TVL
3359B	E-264A, E-182	78	RGS - PVC coated conduit	648.52	1935.24	CCTVE01AC	TVC
						CCTVE01AD	TVL
						MVDSE02A	MVDS DLC
						MVDSE03A	MVDS DLC
						CCTVE01BC	TVC
						CCTVE01BD	TVL
8011A	E-264A	78	Liquidtight flex metal conduit		1928.98	Pull rope	Soft-fiber polyester
8011B	E-264A, E-182	78	RGS - PVC coated conduit		1935.24	Pull rope	Soft-fiber polyester
9057A	E-264A	78	Liquidtight flex metal conduit	442.35	1928.98	2910-12	4 pair #22, shielded pairs, 300V, PE insulation
						2910-8	4 pair #22, shielded pairs, 300V, PE insulation
						2910-7	4 pair #24, overall shielded, 300V, PE insulation
						2119-2	4 pair #22, shielded pairs, 300V, PE insulation
9057B	E-264A, E-182	78	RGS - PVC coated conduit	442.35	1935.24	2910-12	4 pair #22, shielded pairs, 300V, PE insulation
						2910-8	4 pair #22, shielded pairs, 300V, PE insulation
						2910-7	4 pair #24, overall shielded, 300V, PE insulation
						2119-2	4 pair #22, shielded pairs, 300V, PE insulation
9057C	E-264A, E-366	21	RGS - PVC coated conduit	62.07	187.69	2910-11	1-3/C #16, 600V, EPR Insulation

CONDUIT AND TRAY SCHEDULE

E-449C

DESIGN OVERSIGHT	BEHZAD GOLEMOHAMMADI
CALCULATED/ DESIGNED BY	
CHECKED BY	
DATE	3/04
REVISED BY	EJL
DATE REVISED	JE

STATE OF CALIFORNIA - DEPARTMENT OF TRANSPORTATION
Caltrans

LAST REVISION 00-00-00
DATE PLOTTED => 3/17/2008
TIME PLOTTED => 5:42:16 PM

FOR REDUCED PLANS ORIGINAL SCALE IS IN MILLIMETERS 0 20 40 60 80

DGN FILE =>T:\13103\MS\pse\SAS Struc\CCO\SAS CCO42\04-0120f1_0407R01.dgn
USERNAME =>llorico

CU 04251

EA 0120F1

CONDUIT DATA

Conduit No	Reference	Size	Type	Total Fill (mm²)	Allowable Fill (mm²)	Included Cable No.	Conductor Type
3T20H	E-270C	305	152 mm siderail ladder tray	.00	19354.80		
3T20J	E-270C	305	152 mm siderail ladder tray	.00	19354.80		
3T20K	E-270C	305	152 mm siderail ladder tray	.00	19354.80		
3T20L	E-270C	305	152 mm siderail ladder tray	.00	19354.80		
3T20M	E-270C	305	152 mm siderail ladder tray	.00	19354.80		
3T20N	E-270C	305	152 mm siderail ladder tray	.00	19354.80		
3T20P	E-270C	305	152 mm siderail ladder tray	.00	19354.80		
3T20Q	E-270C	305	152 mm siderail ladder tray	.00	19354.80		
3T20R	E-270C	305	152 mm siderail ladder tray	.00	19354.80		
3T20S	E-270C	305	152 mm siderail ladder tray	.00	19354.80		
3T21A	E-270C	305	152 mm siderail ladder tray	.00	19354.80		
3T21B	E-270C	305	152 mm siderail ladder tray	.00	19354.80		
3T21C	E-270C	305	152 mm siderail ladder tray	.00	19354.80		
3T21D	E-270C	305	152 mm siderail ladder tray	.00	19354.80		
3T21E	E-270C	305	152 mm siderail ladder tray	.00	19354.80		
3T21F	E-270C	305	152 mm siderail ladder tray	.00	19354.80		
3T21G	E-270C	305	152 mm siderail ladder tray	.00	19354.80		
3T21H	E-270C	305	152 mm siderail ladder tray	.00	19354.80		
3T21J	E-270C	305	152 mm siderail ladder tray	.00	19354.80		
3T21K	E-270C	305	152 mm siderail ladder tray	.00	19354.80		
3T21L	E-270C	305	152 mm siderail ladder tray	.00	19354.80		
3T21M	E-270C	305	152 mm siderail ladder tray	.00	19354.80		
3T21N	E-270C	305	152 mm siderail ladder tray	.00	19354.80		
3T21P	E-270C	305	152 mm siderail ladder tray	.00	19354.80		
3T21Q	E-270C	305	152 mm siderail ladder tray	.00	19354.80		
3T21R	E-270C	305	152 mm siderail ladder tray	.00	19354.80		
3T21S	E-270C	305	152 mm siderail ladder tray	.00	19354.80		
3T22A	E-270C	305	152 mm siderail ladder tray	.00	19354.80		
3T22AA	E-270C	305	152 mm siderail ladder tray	.00	19354.80		
3T22B	E-270C	305	152 mm siderail ladder tray	.00	19354.80		
3T22C	E-270C	305	152 mm siderail ladder tray	.00	19354.80		

REQUEST FOR INFORMATION NOT ADDRESSED IN THIS CCO REMAIN IN FORCE

MARK	DATE	REVISIONS DESCRIPTIONS	MP EL BY	RR CH'D	42 CCO#
0	02/19/08	ELECTRICAL MODIFICATIONS			

CONTRACT CHANGE ORDER NO. _____

SHEET _____ OF _____

Caltrans Metric

DIST	COUNTY	ROUTE	KILOMETER POST TOTAL PROJECT	SHEET No	TOTAL SHEETS
04	SF	80	13.2/13.9	407S1	1204

REGISTERED ELECTRICAL ENGINEER — 8/31/07

PLANS APPROVAL DATE

REGISTERED PROFESSIONAL ENGINEER — MARWELL FUMIO TAKATA — No. E 8651 — Exp. 9/30/2008 ELECTRICAL — STATE OF CALIFORNIA

PB AMERICAS, Inc.
A Parsons Brinckerhoff Company
303 Second St., Suite 700N
San Francisco, CA 94107-1317

The State of California or its officers or agents shall not be responsible for the accuracy or completeness of electronic copies of this plan sheet.

Caltrans now has a web site! To get to the web site, go to http://www.dot.ca.gov

CONDUIT DATA

Conduit No	Reference	Size	Type	Total Fill (mm²)	Allowable Fill (mm²)	Included Cable No.	Conductor Type
3T22D	E-270C	305	152 mm siderail ladder tray	.00	19354.80		
3T22E	E-270C	305	152 mm siderail ladder tray	.00	19354.80		
3T22F	E-270C	305	152 mm siderail ladder tray	.00	19354.80		
3T22G	E-270C	305	152 mm siderail ladder tray	.00	19354.80		
3T22H	E-270C	305	152 mm siderail ladder tray	.00	19354.80		
3T22J	E-270C	305	152 mm siderail ladder tray	.00	19354.80		
3T22K	E-270C	305	152 mm siderail ladder tray	.00	19354.80		
3T24A	E-270C	305	152 mm siderail ladder tray	.00	19354.80		
3T24AA	E-270C	305	152 mm siderail ladder tray	.00	19354.80		
3T24B	E-270C	305	152 mm siderail ladder tray	.00	19354.80		
3T24C	E-270C	305	152 mm siderail ladder tray	.00	19354.80		
3T24D	E-270C	305	152 mm siderail ladder tray	.00	19354.80		
3T24E	E-270C	305	152 mm siderail ladder tray	.00	19354.80		
3T24F	E-270C	305	152 mm siderail ladder tray	.00	19354.80		
3T24G	E-270C	305	152 mm siderail ladder tray	.00	19354.80		
3T24H	E-270C	305	152 mm siderail ladder tray	.00	19354.80		
3T24J	E-270C	305	152 mm siderail ladder tray	.00	19354.80		
3T24K	E-270C	305	152 mm siderail ladder tray	.00	19354.80		
3T24L	E-270C	305	152 mm siderail ladder tray	.00	19354.80		
3T24M	E-270C	305	152 mm siderail ladder tray	.00	19354.80		
3T24N	E-270C	305	152 mm siderail ladder tray	.00	19354.80		

DESIGN OVERSIGHT
BEHZAD GOLEMOHAMMADI

STATE OF CALIFORNIA - DEPARTMENT OF TRANSPORTATION
Caltrans

REVISED BY	DATE REVISED
DATE 3/04	3/04
EJL	JE
CALCULATED/ DESIGNED BY	CHECKED BY

CONDUIT AND TRAY SCHEDULE

E-449CA

LAST REVISION 00-00-00
DATE PLOTTED => 3/17/2008
TIME PLOTTED => 5:42:34 PM

FOR REDUCED PLANS ORIGINAL SCALE IS IN MILLIMETERS 0 20 40 60 80

DGN FILE =>T:\13103\MS\pse\SAS Struc\CCO\SAS CCO42\04-0120f1_0407S01.dgn
USERNAME =>llorico

CU 04251

EA 0120F1

CONDUIT DATA

Conduit No	Reference	Size	Type	Total Fill (mm²)	Allowable Fill (mm²)	Included Cable No.	Conductor Type
3T24P	E-270C	305	152 mm siderail ladder tray	.00	19354.80		
3T24Q	E-270C	305	152 mm siderail ladder tray	.00	19354.80		
3T24R	E-270C	305	152 mm siderail ladder tray	.00	19354.80		
3T24S	E-270C	305	152 mm siderail ladder tray	.00	19354.80		
3T25A	E-270C	305	152 mm siderail ladder tray	.00	19354.80		
3T25B	E-270C	305	152 mm siderail ladder tray	.00	19354.80		
3T25C	E-270C	305	152 mm siderail ladder tray	.00	19354.80		
3T25D	E-270C	305	152 mm siderail ladder tray	.00	19354.80		
3T25E	E-270C	305	152 mm siderail ladder tray	.00	19354.80		
3T25F	E-270C	305	152 mm siderail ladder tray	.00	19354.80		
3T25G	E-270C	305	152 mm siderail ladder tray	.00	19354.80		
3T25H	E-270C	305	152 mm siderail ladder tray	.00	19354.80		
3T25J	E-270C	305	152 mm siderail ladder tray	.00	19354.80		
3T25K	E-270C	305	152 mm siderail ladder tray	.00	19354.80		
3T25L	E-270C	305	152 mm siderail ladder tray	.00	19354.80		
3T25M	E-270C	305	152 mm siderail ladder tray	.00	19354.80		
3T25N	E-270C	305	152 mm siderail ladder tray	.00	19354.80		
3T25P	E-270C	305	152 mm siderail ladder tray	.00	19354.80		
3T25Q	E-270C	305	152 mm siderail ladder tray	.00	19354.80		
3T25R	E-270C	305	152 mm siderail ladder tray	.00	19354.80		
3T25S	E-270C	305	152 mm siderail ladder tray	.00	19354.80		
3T26A	E-270C	305	152 mm siderail ladder tray	.00	19354.80		
3T26AA	E-270C	305	152 mm siderail ladder tray	.00	19354.80		
3T26B	E-270C	305	152 mm siderail ladder tray	.00	19354.80		
3T26C	E-270C	305	152 mm siderail ladder tray	.00	19354.80		
3T26D	E-270C	305	152 mm siderail ladder tray	.00	19354.80		
3T26E	E-270C	305	152 mm siderail ladder tray	.00	19354.80		
3T26F	E-270C	305	152 mm siderail ladder tray	.00	19354.80		
3T26G	E-270C	305	152 mm siderail ladder tray	.00	19354.80		
3T26H	E-270C	305	152 mm siderail ladder tray	.00	19354.80		
3T26J	E-270C	305	152 mm siderail ladder tray	.00	19354.80		
3T26K	E-270C	305	152 mm siderail ladder tray	.00	19354.80		

REQUEST FOR INFORMATION NOT ADDRESSED IN THIS CCO REMAIN IN FORCE

MARK	DATE	REVISIONS DESCRIPTIONS	MP EL BY	RR CH'D	42 CCO#
0	02/19/08	ELECTRICAL MODIFICATIONS			

CONTRACT CHANGE ORDER NO._____
SHEET _____ OF _____

Caltrans Metric

DIST	COUNTY	ROUTE	KILOMETER POST TOTAL PROJECT	SHEET No	TOTAL SHEETS
04	SF	80	13.2/13.9	407S2	1204

REGISTERED ELECTRICAL ENGINEER — DATE 8/31/07

REGISTERED PROFESSIONAL ENGINEER — MARWELL FUMIO TAKATA — No. E 8651 — Exp. 9/30/2008 ELECTRICAL — STATE OF CALIFORNIA

PLANS APPROVAL DATE

PB AMERICAS, Inc.
A Parsons Brinckerhoff Company
303 Second St., Suite 700N
San Francisco, CA 94107-1317

The State of California or its officers or agents shall not be responsible for the accuracy or completeness of electronic copies of this plan sheet.

Caltrans now has a web site! To get to the web site, go to http://www.dot.ca.gov

CONDUIT DATA

Conduit No	Reference	Size	Type	Total Fill (mm²)	Allowable Fill (mm²)	Included Cable No.	Conductor Type
3T26L	E-270C	305	152 mm siderail ladder tray	.00	19354.80		
3T26M	E-270C	305	152 mm siderail ladder tray	.00	19354.80		
3T26N	E-270C	305	152 mm siderail ladder tray	.00	19354.80		
3T26P	E-270C	305	152 mm siderail ladder tray	.00	19354.80		
3T26Q	E-270C	305	152 mm siderail ladder tray	.00	19354.80		
3T26R	E-270C	305	152 mm siderail ladder tray	.00	19354.80		
3T26S	E-270C	305	152 mm siderail ladder tray	.00	19354.80		
3T27A	E-270C	305	152 mm siderail ladder tray	.00	19354.80		
3T27B	E-270C	305	152 mm siderail ladder tray	.00	19354.80		
3T27C	E-270C	305	152 mm siderail ladder tray	.00	19354.80		
3T27D	E-270C	305	152 mm siderail ladder tray	.00	19354.80		
3T27E	E-270C	305	152 mm siderail ladder tray	.00	19354.80		
3T27F	E-270C	305	152 mm siderail ladder tray	.00	19354.80		
3T27G	E-270C	305	152 mm siderail ladder tray	.00	19354.80		
3T27H	E-270C	305	152 mm siderail ladder tray	.00	19354.80		
3T27J	E-270C	305	152 mm siderail ladder tray	.00	19354.80		
3T27K	E-270C	305	152 mm siderail ladder tray	.00	19354.80		
3T27L	E-270C	305	152 mm siderail ladder tray	.00	19354.80		
3T27M	E-270C	305	152 mm siderail ladder tray	.00	19354.80		
3T27N	E-270C	305	152 mm siderail ladder tray	.00	19354.80		
3T27P	E-270C	305	152 mm siderail ladder tray	.00	19354.80		

CONDUIT AND TRAY SCHEDULE

E-449CB

DESIGN OVERSIGHT — BEHZAD GOLEMOHAMMADI
CALCULATED/DESIGNED BY — CHECKED BY — EJL — JE
DATE 3/04 — 3/04
REVISED BY — DATE REVISED
STATE OF CALIFORNIA - DEPARTMENT OF TRANSPORTATION — Caltrans

LAST REVISION 00-00-00 — DATE PLOTTED => 3/17/2008 — TIME PLOTTED => 5:42:55 PM

FOR REDUCED PLANS ORIGINAL SCALE IS IN MILLIMETERS 0 20 40 60 80

DGN FILE =>T:\13103\MS\pse\SAS Struc\CCO\SAS CC042\04-0120f1_0407S02.dgn
USERNAME =>llorico

CU 04251 — EA 0120F1

CONDUIT DATA

Conduit No	Reference	Size	Type	Total Fill (mm2)	Allowable Fill (mm2)	Included Cable No.	Conductor Type
3T27Q	E-270C	305	152 mm siderail ladder tray	.00	19354.80		
3T27R	E-270C	305	152 mm siderail ladder tray	.00	19354.80		
3T27S	E-270C	305	152 mm siderail ladder tray	.00	19354.80		
3T42A	E-270C	305	152 mm siderail ladder tray	.00	19354.80		
3T42AA	E-270C	305	152 mm siderail ladder tray	.00	19354.80		
3T42B	E-270C	305	152 mm siderail ladder tray	.00	19354.80		
3T42C	E-270C	305	152 mm siderail ladder tray	.00	19354.80		
3T42D	E-270C	305	152 mm siderail ladder tray	.00	19354.80		
3T42E	E-270C	305	152 mm siderail ladder tray	.00	19354.80		
3T42F	E-270C	305	152 mm siderail ladder tray	.00	19354.80		
3T42G	E-270C	305	152 mm siderail ladder tray	.00	19354.80		
3T42H	E-270C	305	152 mm siderail ladder tray	.00	19354.80		
3T42J	E-270C	305	152 mm siderail ladder tray	.00	19354.80		
3T42K	E-270C	305	152 mm siderail ladder tray	.00	19354.80		
3T42L	E-270C	305	152 mm siderail ladder tray	.00	19354.80		
3T42M	E-270C	305	152 mm siderail ladder tray	.00	19354.80		
3T42N	E-270C	305	152 mm siderail ladder tray	.00	19354.80		
3T42P	E-270C	305	152 mm siderail ladder tray	.00	19354.80		
3T42Q	E-270C	305	152 mm siderail ladder tray	.00	19354.80		
3T42R	E-270C	305	152 mm siderail ladder tray	.00	19354.80		
3T42S	E-270C	305	152 mm siderail ladder tray	.00	19354.80		
3T43A	E-270C	305	152 mm siderail ladder tray	.00	19354.80		
3T43B	E-270C	305	152 mm siderail ladder tray	.00	19354.80		
3T43C	E-270C	305	152 mm siderail ladder tray	.00	19354.80		
3T43D	E-270C	305	152 mm siderail ladder tray	.00	19354.80		
3T43E	E-270C	305	152 mm siderail ladder tray	.00	19354.80		
3T43F	E-270C	305	152 mm siderail ladder tray	.00	19354.80		
3T43G	E-270C	305	152 mm siderail ladder tray	.00	19354.80		
3T43H	E-270C	305	152 mm siderail ladder tray	.00	19354.80		
3T43J	E-270C	305	152 mm siderail ladder tray	.00	19354.80		
3T43K	E-270C	305	152 mm siderail ladder tray	.00	19354.80		

REQUEST FOR INFORMATION NOT ADDRESSED IN THIS CCO REMAIN IN FORCE

MARK	DATE	REVISIONS DESCRIPTIONS	MP EL BY	RR CH'D	42 CCO#
0	02/19/08	ELECTRICAL MODIFICATIONS			

CONTRACT CHANGE ORDER NO._____
SHEET _____ OF _____

Caltrans Metric

DIST	COUNTY	ROUTE	KILOMETER POST TOTAL PROJECT	SHEET No	TOTAL SHEETS
04	SF	80	13.2/13.9	407S3	1204

REGISTERED ELECTRICAL ENGINEER — 8/31/07 DATE

REGISTERED PROFESSIONAL ENGINEER — MARNELL FUMIO TAKATA — No. E 8651 — Exp. 9/30/2008 ELECTRICAL — STATE OF CALIFORNIA

PLANS APPROVAL DATE

PB AMERICAS, Inc.
A Parsons Brinckerhoff Company
303 Second St., Suite 700N
San Francisco, CA 94107-1317

The State of California or its officers or agents shall not be responsible for the accuracy or completeness of electronic copies of this plan sheet.

Caltrans now has a web site! To get to the web site, go to http://www.dot.ca.gov

CONDUIT DATA

Conduit No	Reference	Size	Type	Total Fill (mm2)	Allowable Fill (mm2)	Included Cable No.	Conductor Type
3T43L	E-270C	305	152 mm siderail ladder tray	.00	19354.80		
3T43M	E-270C	305	152 mm siderail ladder tray	.00	19354.80		
3T43N	E-270C	305	152 mm siderail ladder tray	.00	19354.80		
3T43P	E-270C	305	152 mm siderail ladder tray	.00	19354.80		
3T43Q	E-270C	305	152 mm siderail ladder tray	.00	19354.80		
3T43R	E-270C	305	152 mm siderail ladder tray	.00	19354.80		
3T43S	E-270C	305	152 mm siderail ladder tray	.00	19354.80		
3T44A	**E-270C**	**305**	**152 mm siderail ladder tray**	**.00**	**19354.80**		
3T44A	E-270C	305	152 mm siderail ladder tray	.00	19354.80		
3T44B	E-270C	305	152 mm siderail ladder tray	.00	19354.80		
3T44C	E-270C	305	152 mm siderail ladder tray	.00	19354.80		
3T44D	E-270C	305	152 mm siderail ladder tray	.00	19354.80		
3T44E	E-270C	305	152 mm siderail ladder tray	.00	19354.80		
3T44F	E-270C	305	152 mm siderail ladder tray	.00	19354.80		
3T44G	E-270C	305	152 mm siderail ladder tray	.00	19354.80		
3T44H	E-270C	305	152 mm siderail ladder tray	.00	19354.80		
3T44J	E-270C	305	152 mm siderail ladder tray	.00	19354.80		
3T44K	E-270C	305	152 mm siderail ladder tray	.00	19354.80		
3T44L	E-270C	305	152 mm siderail ladder tray	.00	19354.80		
3T44M	E-270C	305	152 mm siderail ladder tray	.00	19354.80		
3T44N	E-270C	305	152 mm siderail ladder tray	.00	19354.80		
3T44P	E-270C	305	152 mm siderail ladder tray	.00	19354.80		
3T44Q	E-270C	305	152 mm siderail ladder tray	.00	19354.80		

CONDUIT AND TRAY SCHEDULE

E-449CC

DESIGNED BY	CALCULATED BY	CHECKED BY	DRAWN BY	REVISED BY	DATE REVISED
EJL		JE		DATE 3/04	3/04

DESIGN OVERSIGHT: BEHZAD GOLEMOHAMMADI

STATE OF CALIFORNIA - DEPARTMENT OF TRANSPORTATION

Caltrans

LAST REVISION 00-00-00 | DATE PLOTTED => 3/17/2008 | TIME PLOTTED => 5:43:24 PM

FOR REDUCED PLANS ORIGINAL SCALE IS IN MILLIMETERS 0 20 40 60 80

DGN FILE =>T:\13103\MS\pse\SAS Struc\CCO\SAS CC042\04-0120f1_0407S03.dgn
USERNAME =>llorico

CU 04251 | EA 0120F1

CONDUIT DATA

Conduit No	Reference	Size	Type	Total Fill (mm²)	Allowable Fill (mm²)	Included Cable No.	Conductor Type
3T44R	E-270C	305	152 mm siderail ladder tray	.00	19354.80		
3T44S	E-270C	305	152 mm siderail ladder tray	.00	19354.80		
3T45A	E-270C	305	152 mm siderail ladder tray	.00	19354.80		
3T45B	E-270C	305	152 mm siderail ladder tray	.00	19354.80		
3T45C	E-270C	305	152 mm siderail ladder tray	.00	19354.80		
3T45D	E-270C	305	152 mm siderail ladder tray	.00	19354.80		
3T45E	E-270C	305	152 mm siderail ladder tray	.00	19354.80		
3T45F	E-270C	305	152 mm siderail ladder tray	.00	19354.80		
3T45G	E-270C	305	152 mm siderail ladder tray	.00	19354.80		
3T45H	E-270C	305	152 mm siderail ladder tray	.00	19354.80		
3T45J	E-270C	305	152 mm siderail ladder tray	.00	19354.80		
3T45K	E-270C	305	152 mm siderail ladder tray	.00	19354.80		
3T45L	E-270C	305	152 mm siderail ladder tray	.00	19354.80		
3T45M	E-270C	305	152 mm siderail ladder tray	.00	19354.80		
3T45N	E-270C	305	152 mm siderail ladder tray	.00	19354.80		
3T45P	E-270C	305	152 mm siderail ladder tray	.00	19354.80		
3T45Q	E-270C	305	152 mm siderail ladder tray	.00	19354.80		
3T45R	E-270C	305	152 mm siderail ladder tray	.00	19354.80		
3T45S	E-270C	305	152 mm siderail ladder tray	.00	19354.80		
3T46H	E-270C	305	152 mm siderail ladder tray	.00	19354.80		
3T46J	E-270C	305	152 mm siderail ladder tray	.00	19354.80		
3T46K	E-270C	305	152 mm siderail ladder tray	.00	19354.80		
3T46L	E-270C	305	152 mm siderail ladder tray	.00	19354.80		
3T46M	E-270C	305	152 mm siderail ladder tray	.00	19354.80		
3T46N	E-270C	305	152 mm siderail ladder tray	.00	19354.80		
3T46P	E-270C	305	152 mm siderail ladder tray	.00	19354.80		
3T46Q	E-270C	305	152 mm siderail ladder tray	.00	19354.80		
3T46R	E-270C	305	152 mm siderail ladder tray	.00	19354.80		
3T46S	E-270C	305	152 mm siderail ladder tray	.00	19354.80		
3T47A	E-270C	305	152 mm siderail ladder tray	.00	19354.80		

REQUEST FOR INFORMATION NOT ADDRESSED IN THIS CCO REMAIN IN FORCE

MARK	DATE	REVISIONS DESCRIPTIONS	MP EL BY	RR CH'D	42 CCO#
0	02/19/08	ELECTRICAL MODIFICATIONS			

CONTRACT CHANGE ORDER NO. _____

SHEET _____ OF _____

Caltrans Metric

DIST	COUNTY	ROUTE	KILOMETER POST TOTAL PROJECT	SHEET No	TOTAL SHEETS
04	SF	80	13.2/13.9	407S4	1204

REGISTERED ELECTRICAL ENGINEER — DATE 8/31/07

REGISTERED PROFESSIONAL ENGINEER — MARWELL FUMIO TAKATA — No. E 8651 — Exp. 9/30/2008 ELECTRICAL — STATE OF CALIFORNIA

PLANS APPROVAL DATE

PB AMERICAS, Inc.
A Parsons Brinckerhoff Company
303 Second St., Suite 700N
San Francisco, CA 94107-1317

The State of California or its officers or agents shall not be responsible for the accuracy or completeness of electronic copies of this plan sheet.

Caltrans now has a web site! To get to the web site, go to http://www.dot.ca.gov

CONDUIT DATA

Conduit No	Reference	Size	Type	Total Fill (mm²)	Allowable Fill (mm²)	Included Cable No.	Conductor Type
3T47B	E-270C	305	152 mm siderail ladder tray	.00	19354.80		
3T47C	E-270C	305	152 mm siderail ladder tray	.00	19354.80		
3T47D	E-270C	305	152 mm siderail ladder tray	.00	19354.80		
3T47E	E-270C	305	152 mm siderail ladder tray	.00	19354.80		
3T47F	E-270C	305	152 mm siderail ladder tray	.00	19354.80		
3T47G	E-270C	305	152 mm siderail ladder tray	.00	19354.80		
3T47H	E-270C	305	152 mm siderail ladder tray	.00	19354.80		
3T47J	E-270C	305	152 mm siderail ladder tray	.00	19354.80		
3T47K	E-270C	305	152 mm siderail ladder tray	.00	19354.80		
3T47L	E-270C	305	152 mm siderail ladder tray	.00	19354.80		
3T47M	E-270C	305	152 mm siderail ladder tray	.00	19354.80		
3T47N	E-270C	305	152 mm siderail ladder tray	.00	19354.80		
3T47P	E-270C	305	152 mm siderail ladder tray	.00	19354.80		
3T47Q	E-270C	305	152 mm siderail ladder tray	.00	19354.80		
3T47R	E-270C	305	152 mm siderail ladder tray	.00	19354.80		
3T47S	E-270C	305	152 mm siderail ladder tray	.00	19354.80		

CONDUIT AND TRAY SCHEDULE

E-449CD

CALCULATED/ DESIGNED BY	CHECKED BY
EJL	JE

DATE	REVISED BY
3/04	DATE REVISED

DESIGN OVERSIGHT
BEHZAD GOLEMOHAMMADI

STATE OF CALIFORNIA - DEPARTMENT OF TRANSPORTATION
Caltrans

LAST REVISION 00-00-00
DATE PLOTTED => 3/17/2008
TIME PLOTTED => 5:46:04 PM

FOR REDUCED PLANS ORIGINAL SCALE IS IN MILLIMETERS 0 20 40 60 80

DGN FILE =>T:\13103\MS\pse\SAS Struc\CCO\SAS CCO42\04-0120f1_0407S04.dgn
USERNAME =>llorico

CU 04251

EA 0120F1