DIST.	COUNTY	ROUTE	KILOMETER POST TOTAL PROJECT	SHEET NO.	TOTAL SHEETS
04	SF	80	13.2/13.9	587R2	1204

Caltrans Metric

4

REGISTERED ENGINEER - CIVIL

12-6-04
PLANS APPROVAL DATE

REGISTERED PROFESSIONAL ENGINEER Marwan N. Nader No. C 054426 Exp. 12/31/07 CIVIL STATE OF CALIFORNIA

The State of California or its officers or agents shall not be responsible for the accuracy or completeness of electronic copies of this plan sheet.

T.Y. LIN / MOFFATT & NICHOL
825 BATTERY STREET
SAN FRANCISCO, CA 94111

Caltrans now has a web site! To get to the web site, go to: http://www.dot.ca.gov

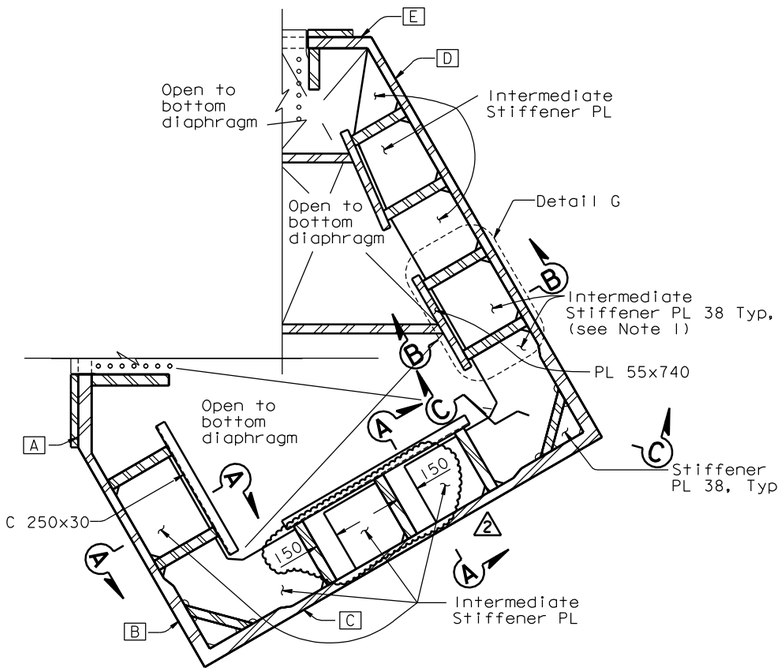

1 INTERMEDIATE STIFFENER PLATE PLAN (see Note 1)
1:20
(Diaphragm type 2C only, diaphragm not shown for clarity)

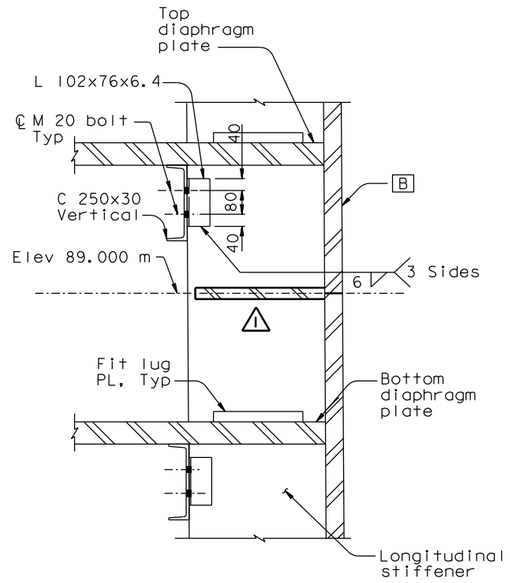

SECTION A-A (see Note 3)
1:10

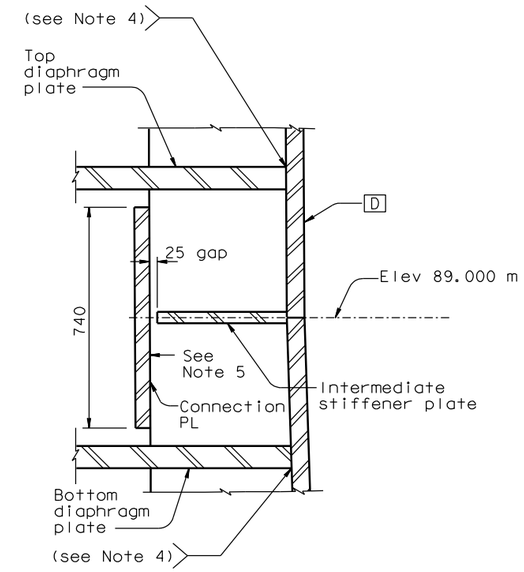

1 SECTION B-B
1:10

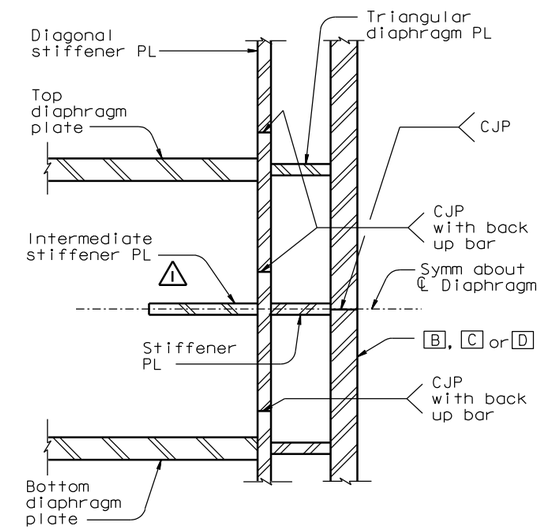

SECTION C-C
1:10

MARK	DATE	DESCRIPTIONS	BY	CH'D	CCO#
2	09/07/07	ELECTRICAL MODIFICATIONS	NV	MN	42
1	06/23/06	INTERMEDIATE STIFFENER PLATE & MISC.	MN	NV	21

REVISIONS

CONTRACT CHANGE ORDER NO. _____
SHEET ____ OF ____

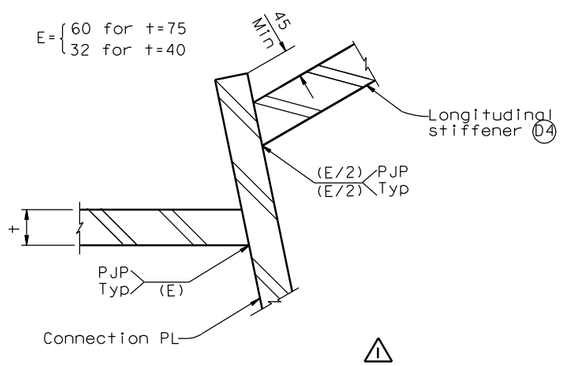

1 DETAIL E (Diaphragm not shown for clarity)
1:5

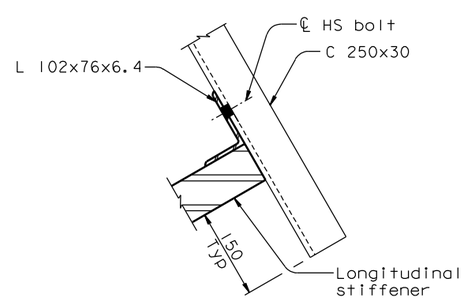

DETAIL F (Diaphragm not shown for clarity)
1:5
1

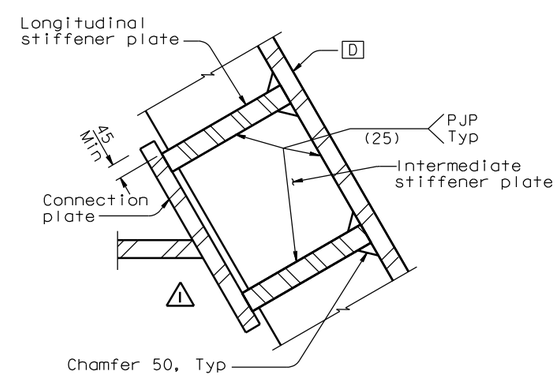

DETAIL G
1:10

NOTES:

1. Intermediate stiffener plate shall be located at elevation 89.000 m for tower skin wall C and D, and part of skin walls B.
2. For skin plate slope, see "Tower Shaft Details" sheets.
3. Details in Section A-A shall apply to similar details in all other diaphragm, unless noted otherwise.
4. The PJP and fillet welds between the diaphragm and skin plate may be made with an equivalent PJP weld from one side only. The back-up bar for CJP weld between the diaphragm and the skin plate may remain in place.
5. 1 At stiffener kink at elevation 89.000 m cut flat surface for attachment of connection plate.

4 REVISED PER ADDENDUM NO. 4 DATED DECEMBER 9, 2005

ALL DIMENSIONS ARE IN MILLIMETERS UNLESS OTHERWISE SHOWN

R. Valizadeh/V. Toan/Y.L./W.L./F.C.
DESIGN OVERSIGHT
Roya Valizadeh / Vong Toan / Y. Liu
SIGN OFF DATE 09/07/07

	BY	CHECKED
DESIGN	M. Nader	M. Guiyas
DETAILS	L. Rus	M. Guiyas
QUANTITIES	L. Rus	Y. Zhang

PREPARED FOR THE STATE OF CALIFORNIA DEPARTMENT OF TRANSPORTATION

R. Manzanarez
PROJECT ENGINEER

BRIDGE NO. 34-0006L/R
KILOMETER POST 13.2/13.9

SAN FRANCISCO OAKLAND BAY BRIDGE
EAST SPAN SEISMIC SAFETY PROJECT
SELF-ANCHORED SUSPENSION BRIDGE
(SUPERSTRUCTURE & TOWER)

TOWER DIAPHRAGM DETAILS NO. 12

Rev. Date: 5-18-98

ORIGINAL SCALE IN MILLIMETERS FOR REDUCED PLANS 0 10 20 30 40 50 60 70 80 90 100

CU 04
EA 0120F1

DISREGARD PRINTS BEARING EARLIER REVISION DATES

REVISION DATES (PRELIMINARY STAGE ONLY) 05/14/01 04/08/02 01/07/02 12/19/02 11/13/05

SHEET 170R2 OF

FILE => I:\bb\04-0120F1\sas\contract plans and cco\cco\in progress\cco#42\dgn\aetdh09.dgn

100 % PS&E

USERNAME => vignatovsk DATE PLOTTED => 07 SEP 2007 TIME PLOTTED => 13:23:05