DIST	COUNTY	ROUTE	KILOMETER POST TOTAL PROJECT	SHEET No	TOTAL SHEETS
04	SF	80	13.2/13.9	275S1	1204

REGISTERED ELECTRICAL ENGINEER 8/24/07 DATE

PLANS APPROVAL DATE

REGISTERED PROFESSIONAL ENGINEER MAXWELL FUMIO TAKAKI NO. E 8651 Exp. 9/30/2008 ELECTRICAL STATE OF CALIFORNIA

PB AMERICAS, Inc.
A Parsons Brinckerhoff Company
303 Second St., Suite 700N
San Francisco, CA 94107-1317

The State of California or its officers or agents shall not be responsible for the accuracy or completeness of electronic copies of this plan sheet.

Caltrans now has a web site! To get to the web site, go to http://www.dot.ca.gov

REQUEST FOR INFORMATION NOT ADDRESSED IN THIS CCO REMAIN IN FORCE

MARK	DATE	DESCRIPTIONS	BY	CH'D	CCO#
0	02/19/08	ELECTRICAL MODIFICATIONS	MP EL	RR	42

REVISIONS

CONTRACT CHANGE ORDER NO._____
SHEET _____ OF _____

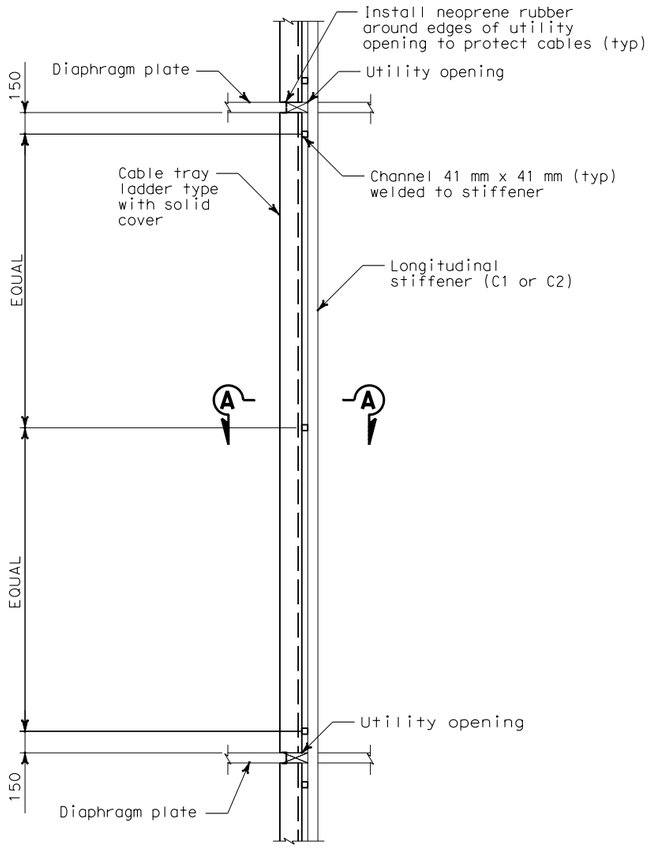

DETAIL 1
ELEVATION VIEW

TOWER CABLE TRAY
TYPICAL INSTALLATION
SCALE: 1:20

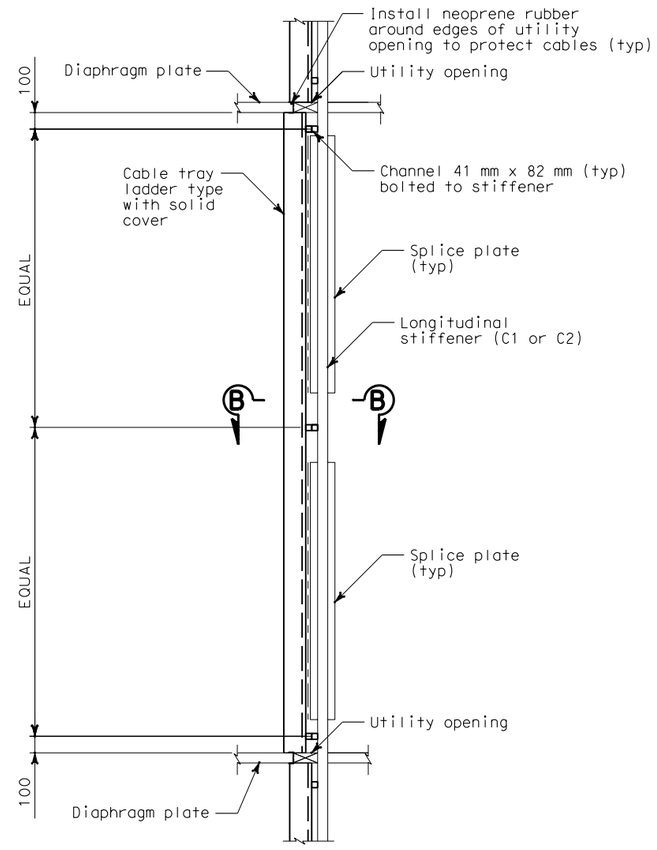

DETAIL 2
ELEVATION VIEW

TOWER CABLE TRAY
TYPICAL INSTALLATION
ALONG SPLICE PLATE
SCALE: 1:20

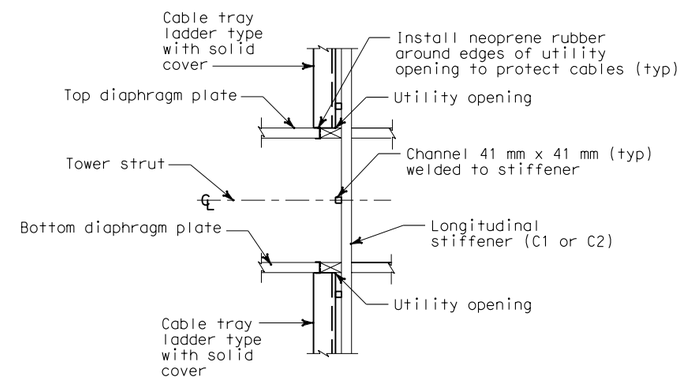

DETAIL 3
ELEVATION VIEW

TOWER CABLE TRAY
TYPICAL INSTALLATION
ALONG TOWER STRUT AREA
SCALE: 1:20

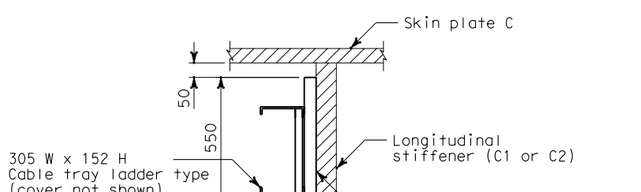

SECTION A-A

SCALE: 1:10

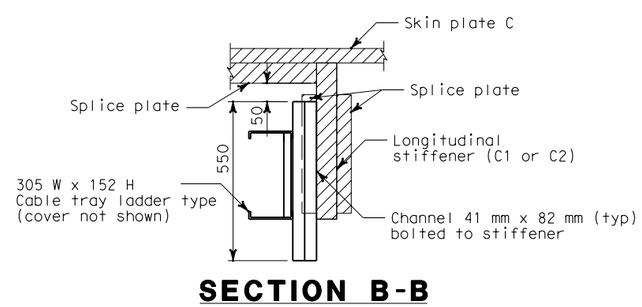

SECTION B-B

SCALE: 1:10

NOTES:

1. TOS/Communication cable trays shall be installed along C2 stiffeners.
2. 600V cable trays shall be installed along C1 stiffeners.
3. See Sheets E- 270B AND E-270C for cable trays location.
4. Provide strut channels on C1 and C2 stiffeners in each tower shaft from elevations 3 m through 143 m.
5. Kellems cable riser support grip shall be installed at top end of cable entering the cable tray. Maximum vertical spacing between cable grips is 30 m.

DETAILS
TOWER AND SUSPENSION CABLE CABLE TRAY LOCATION

SCALE AS NOTED

E-270A

DATE	REVISED BY
3/07	RG
7/07	RR

DATE REVISED

CALCULATED/DESIGNED BY RG
CHECKED BY RR

DESIGN OVERSIGHT
BEHZAD GOLEMOHAMMADI

STATE OF CALIFORNIA - DEPARTMENT OF TRANSPORTATION
Caltrans

LAST REVISION 00-00-00
DATE PLOTTED => 5/9/2008
TIME PLOTTED => 2:23:53 PM

ALL DIMENSIONS ARE IN MILLIMETERS UNLESS OTHERWISE SHOWN.

FOR REDUCED PLANS ORIGINAL SCALE IS IN MILLIMETERS 0 20 40 60 80

DGN FILE =>T:\13103\MS\pse\SAS Struc\CCO\SAS CC042\04-0120f1_0275S01.dgn
USERNAME =>llorico

CU 04251

EA 0120F1