DIST	COUNTY	ROUTE	KILOMETER POST TOTAL PROJECT	SHEET No	TOTAL SHEETS
04	SF	80	13.2/13.9	272R1	1204

Caltrans Metric

REGISTERED ELECTRICAL ENGINEER 12/19/02 DATE

12-6-04
PLANS APPROVAL DATE

REGISTERED PROFESSIONAL ENGINEER JENS ERLINGSSON No. 8249 Exp. 9/30/06 ELECTRICAL STATE OF CALIFORNIA

PB POWER, Inc.
A Parsons Brinckerhoff Company
303 Second St., Suite 700N
San Francisco, CA 94107-1317

The State of California or its officers or agents shall not be responsible for the accuracy or completeness of electronic copies of this plan sheet.

Caltrans now has a web site! To get to the web site, go to http://www.dot.ca.gov

REGISTERED PROFESSIONAL ENGINEER MANNELL FUMIO TAKAKI No. E 8651 Exp. 9/30/2008 ELECTRICAL STATE OF CALIFORNIA

FOR REVISION ONLY

REQUEST FOR INFORMATION NOT ADDRESSED IN THIS CCO REMAIN IN FORCE

MARK	DATE	DESCRIPTIONS	BY	CH'D	CCO#
1	02/19/08	ELECTRICAL MODIFICATIONS	MP EL	RR	42

REVISIONS

CONTRACT CHANGE ORDER NO._____
SHEET _____ OF _____

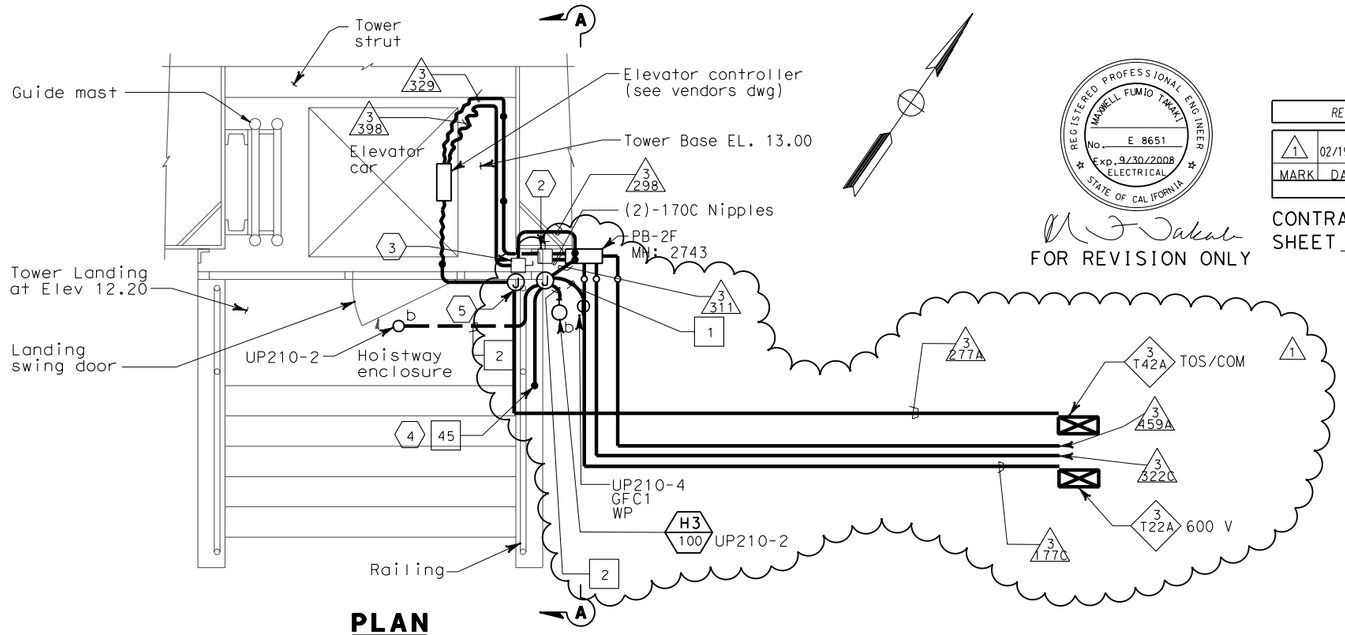

PLAN
TOWER BASE ELEVATOR ENCLOSURE
SCALE 1:20

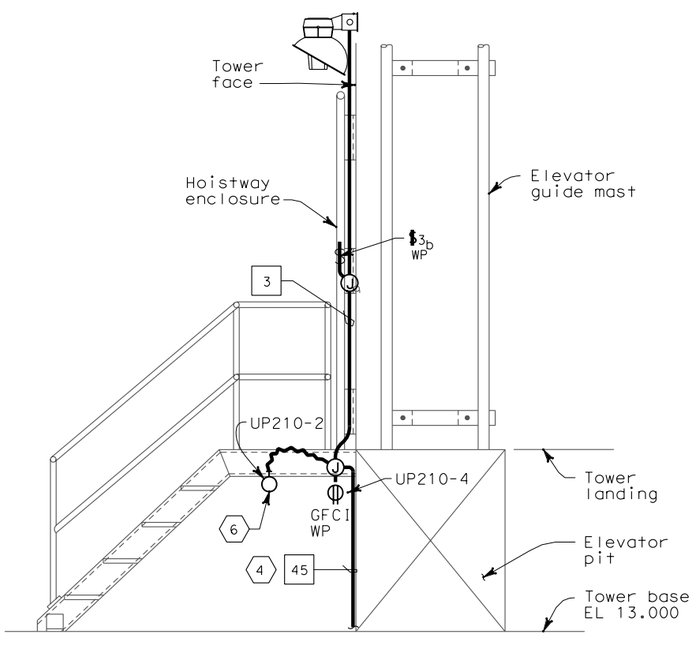

SECTION A-A
SCALE 1:20

THIS PLAN ACCURATE FOR ELECTRICAL WORK ONLY.

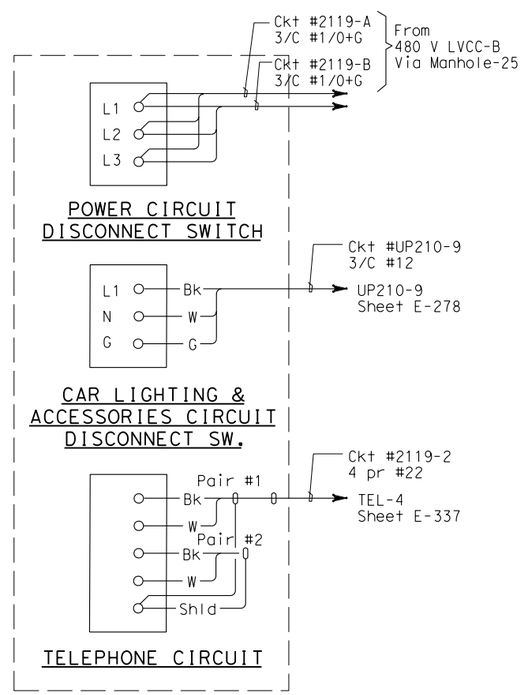

MAIN TOWER ELEVATOR PIT CONNECTION DIAGRAM

ALL DIMENSIONS ARE IN MILLIMETERS UNLESS OTHERWISE SHOWN.

SHEET NOTES:

1. Deleted.
2. 480 V, 3 ø, 100 A, non-fused disconnect switch for elevator pit motor. Use liquid tight flexible conduit from disconnect switch to the motor.
3. 120 V single pole single throw disconnect switch for elevator lighting and fan.
4. Down to elevation 9.0 m. See sheet E-266.
5. PB-TOS for telephone communication lines.
6. Elevator pit light fixture shall be located a maximum of 450 mm from access ladder and 915 mm above lowest landing.
7. For lighting and receptacles in this area, see sheet E-266.

NOTES:

1. References:
   - For utility panel UP-210 schedule, see sheet E-278.
   - For types of pull boxes, splice boxes and enclosures, see sheets E-83 and E-169.
   - For conduit and cable tray schedules, see sheets starting at E-401.
   - For lighting fixture schedule, see sheet E-273.
   - For vertical conduit runs support system, see sheet E-287.
   - For typical lighting installation details, see sheet E-267.
   - For typical conduit installation details, see sheet E-268.
2. Electrical conduits shall enter the tower shafts between stiffeners A3 and A4 only. For conduit entry details, see Structural Utility drawings
3. Fixture mounting height elevation shall be 2.4 m above floor/platform elevation UNO.
4. All conduits and fittings routed exposed at grating shall be rigid galvanized steel, PVC coated.
5. For other related work not shown on this sheet, see Electrical Special Provisions.

DETAILS
TOWER AND SUSPENSION CABLE
TOWER POWER AND LIGHTING
SCALE AS NOTED

E-265

STATE OF CALIFORNIA - DEPARTMENT OF TRANSPORTATION
Caltrans

DESIGN OVERSIGHT: BEHZAD GOLEMOHAMMADI

CALCULATED/ DESIGNED BY	FK	DATE 10/01	REVISED BY	DATE REVISED
CHECKED BY	EDC	11/01		

LAST REVISION 00-00-00 | DATE PLOTTED => 3/17/2008 TIME PLOTTED => 5:14:28 PM

FOR REDUCED PLANS ORIGINAL SCALE IS IN MILLIMETERS 0 20 40 60 80

DGN FILE =>T:\13103\MS\pse\SAS Struc\CCO\SAS CC042\04-0120f1_0272R01.dgn
USERNAME =>llorico

CU 04251 | EA 0120F1