DIST	COUNTY	ROUTE	KILOMETER POST TOTAL PROJECT	SHEET No	TOTAL SHEETS
04	SF	80	13.2/13.9	271R1	1204

REGISTERED ELECTRICAL ENGINEER 12/19/02 DATE

12-6-04
PLANS APPROVAL DATE

REGISTERED PROFESSIONAL ENGINEER JENS ERLINGSSON No. 8249 Exp. 9/30/06 ELECTRICAL STATE OF CALIFORNIA

PB POWER, Inc.
A Parsons Brinckerhoff Company
303 Second St., Suite 700N
San Francisco, CA 94107-1317

The State of California or its officers or agents shall not be responsible for the accuracy or completeness of electronic copies of this plan sheet.

Caltrans now has a web site! To get to the web site, go to http://www.dot.ca.gov

Caltrans Metric

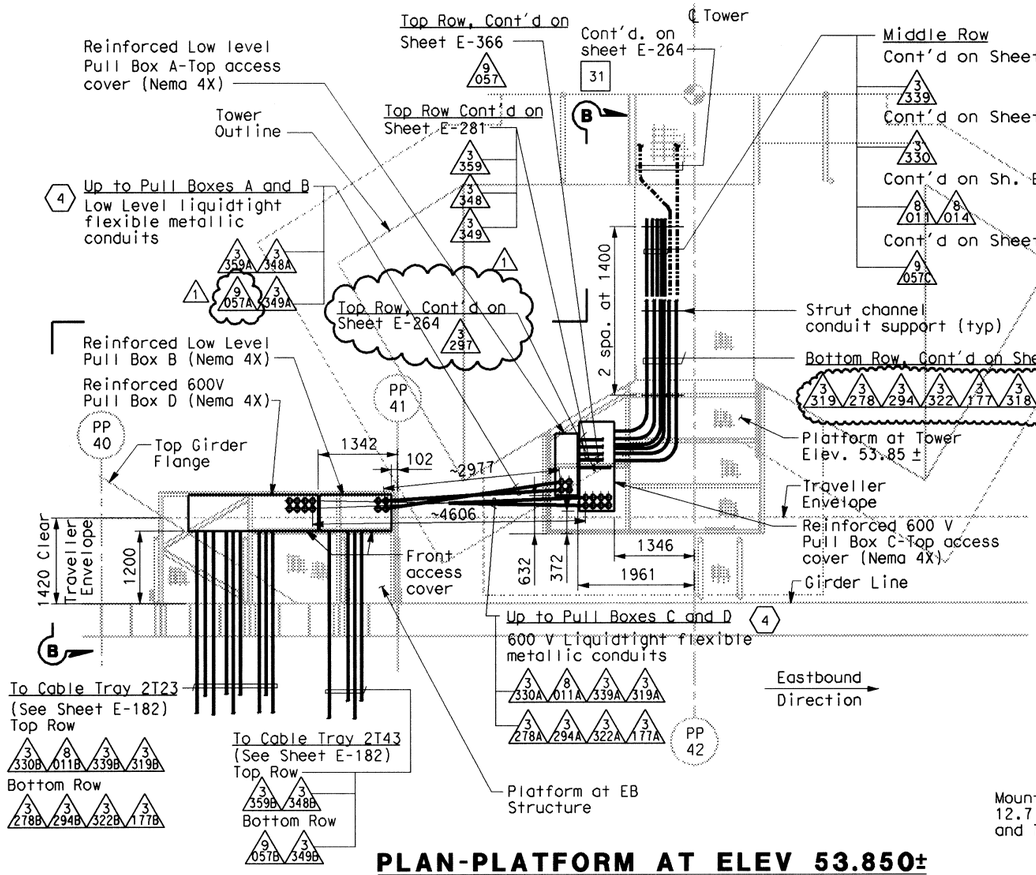

PLAN-PLATFORM AT ELEV 53.850±

SCALE 1:50

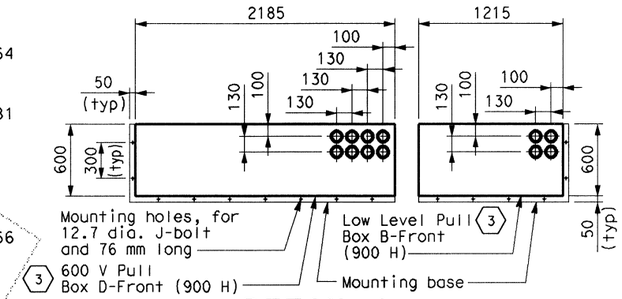

DETAIL 1

BOTTOM PLAN OF PULL BOXES LOCATED AT EB STRUCTURE PLATFORM
SCALE 1:25

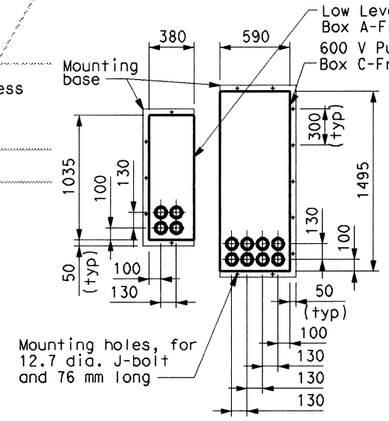

DETAIL 2

BOTTOM PLAN OF PULL BOXES LOCATED AT TOWER PLATFORM
SCALE 1:25

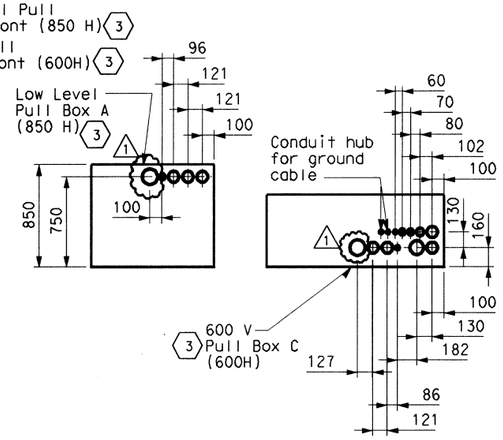

DETAIL 3

FRONT ELEVATION OF PULL BOXES LOCATED AT TOWER PLATFORM
SCALE 1:25

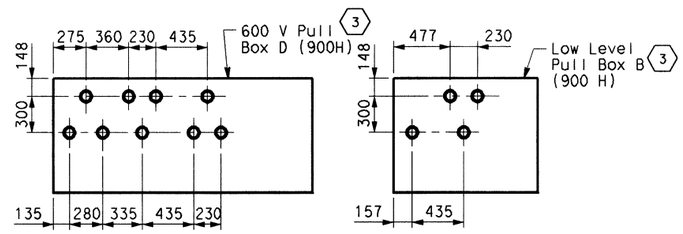

DETAIL 4

FRONT ELEVATION OF PULL BOXES LOCATED AT EB STRUCTURE PLATFORM
SCALE 1:25

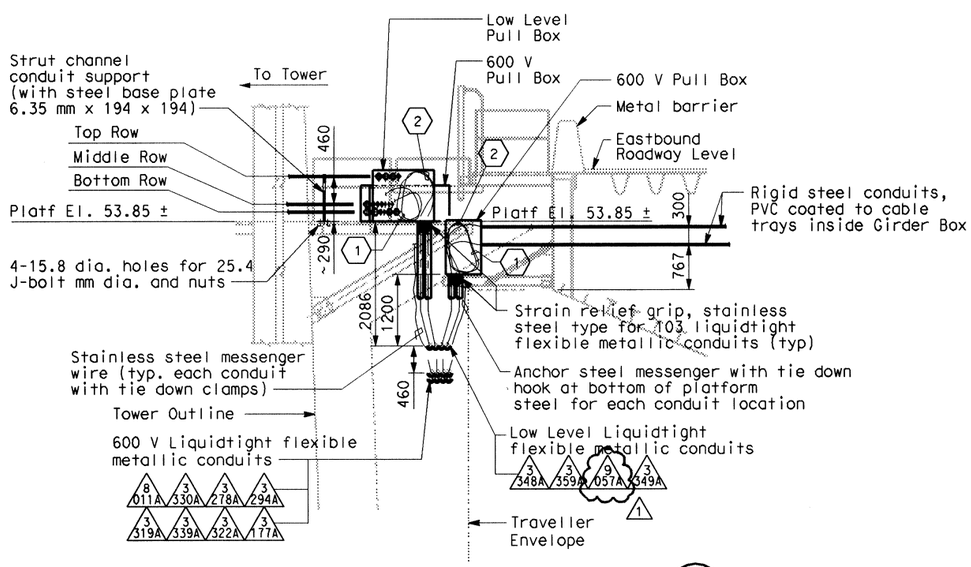

SECTION B

SCALE 1:50

SHEET NOTES

1. Coil 3 meters long of cable for each circuits inside the pull boxes.
2. Provide hooked cable support grips for cable or groups of cables at each liquidtight flexible metallic conduit inside the pull box.
3. Pull Box shall be fabricated of Nema 4X stainless steel, type 304. Pull Box shall be of reinforced construction to provide vertical support at bottom side of box for weighted conduit and cables inside. The top side of the Pull Box shall be reinforced and provided with hooks for cable support grips inside the pull box.
4. Electrical conduit design between Eastbound Structure and Main Tower is based on the maximum expansion of 1000 mm all directions.

NOTES

1. For location of sleeves Eastbound Structure PP-40 and PP-41, see Structural Plans.
2. Each liquidtight flexible metallic conduit shall be provided with #6 green insulated ground conductor outside the conduit.

REGISTERED PROFESSIONAL ENGINEER MAXWELL FUMIO TAKATA No. E 8651 Exp. 9/30/2008 ELECTRICAL STATE OF CALIFORNIA

FOR REVISION ONLY

REQUEST FOR INFORMATION NOT ADDRESSED IN THIS CCO REMAIN IN FORCE

MARK	DATE	DESCRIPTIONS	BY	CH'D	CCO#
1	02/19/08	ELECTRICAL MODIFICATIONS	MP EL	RR	42

REVISIONS

CONTRACT CHANGE ORDER NO. _____
SHEET ____ OF ____

DETAILS
TOWER AND SUSPENSION CABLE

SCALE: AS NOTED

E-264A

THIS PLAN ACCURATE FOR ELECTRICAL WORK ONLY.

ALL DIMENSIONS ARE IN MILLIMETERS UNLESS OTHERWISE SHOWN.

REVISED BY	DATE REVISED

CALCULATED/DESIGNED BY	DATE 3/04
EJL	
CHECKED BY	3/04
JE	

DESIGN OVERSIGHT
BEHZAD GOLEMOHAMMADI

STATE OF CALIFORNIA - DEPARTMENT OF TRANSPORTATION
Caltrans

FOR REDUCED PLANS ORIGINAL 0 20 40 60 80

DGN FILE =>t:\13103\ms\pse\sas struc\cco\sas cco42\04-0120f1_02\1r01.dgn

LAST REVISION | DATE PLOTTED => 2/19/2008