DIST.	COUNTY	ROUTE	KILOMETER POST TOTAL PROJECT	SHEET NO.	TOTAL SHEETS
04	SF	80	13.2/13.9	966R2	1204

REGISTERED ENGINEER - CIVIL

1-27-03
PLANS APPROVAL DATE

REGISTERED PROFESSIONAL ENGINEER Marwan N. Nader No. C 054426 Exp. 12/31/09 CIVIL STATE OF CALIFORNIA

The State of California or its officers or agents shall not be responsible for the accuracy or completeness of electronic copies of this plan sheet.

T.Y. LIN / MOFFATT & NICHOL
825 BATTERY STREET
SAN FRANCISCO, CA 94111

To get to the web site, go to: http://www.dot.ca.gov

Caltrans Metric

PLATE AND WELD THICKNESS TABLE

DIAPHRAGM	A (mm)	B (mm)	N (mm)
TYPE 1	35	30	18*
TYPES 2 & 3	45	40	35

* PJP not modified for Type 1 diaphragms

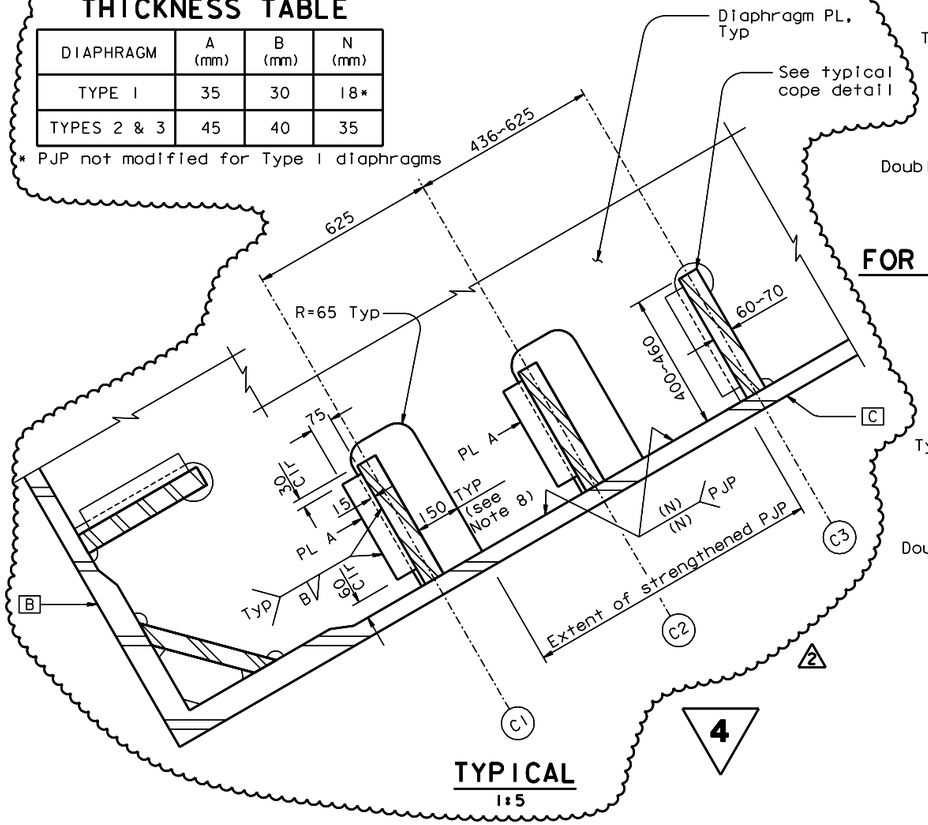

TYPICAL
1:5

DIAPHRAGM COPE DETAIL FOR UTILITY CONDUITS

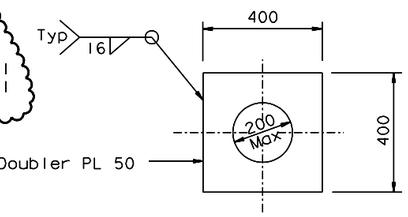

FOR DEHUMIDIFICATION CONDUITS (see Note 3)
1:10

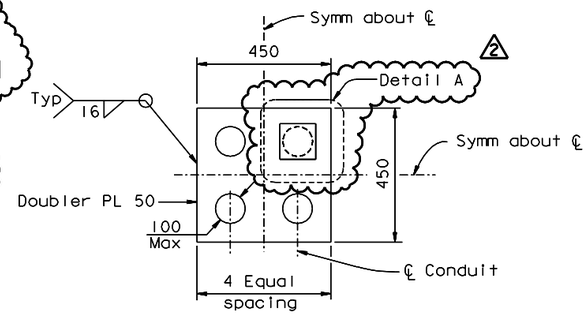

FOR ELECTRIC CONDUITS (see Note 1)
1:10

HOLE STIFFENING DETAIL
FOR UTILITY CONDUITS

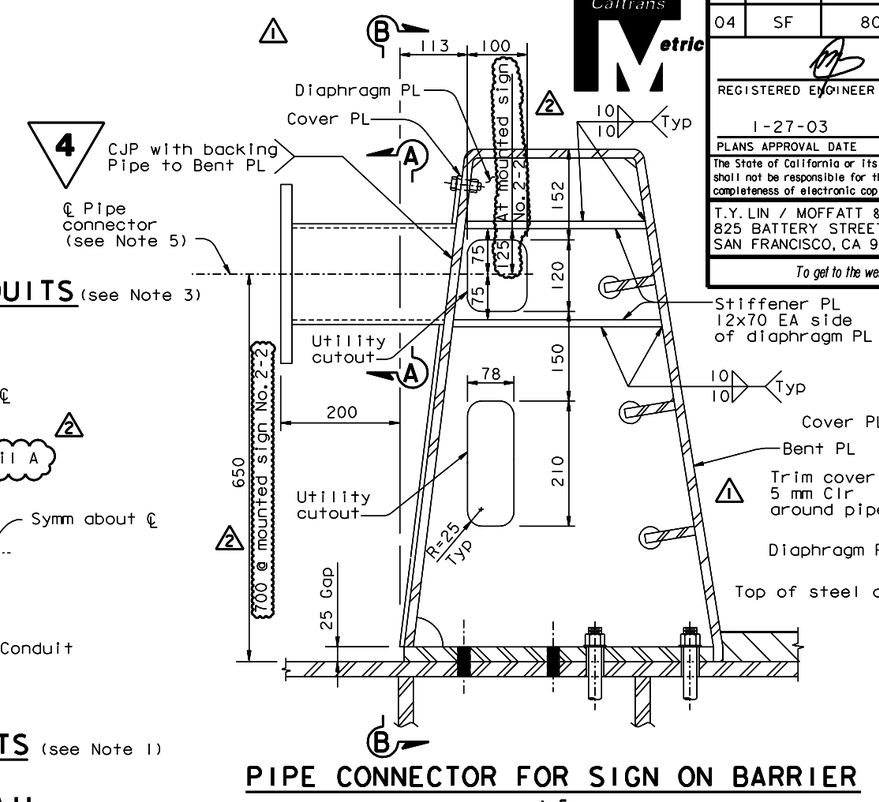

PIPE CONNECTOR FOR SIGN ON BARRIER
1:5

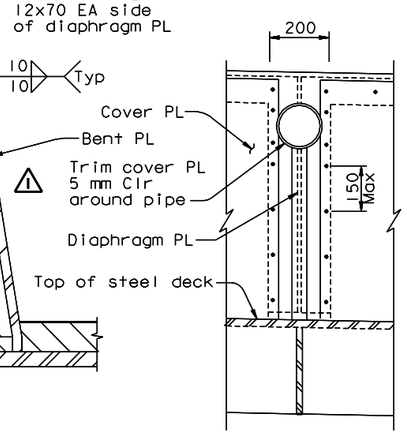

SECTION B-B
1:10

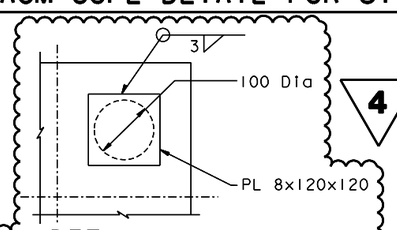

DETAIL A
SPARE PENETRATIONS SEALING DETAIL
(As required, see Note 6)
1:2.5

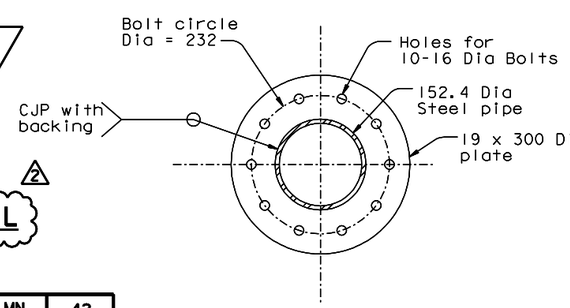

SECTION A-A
1:5

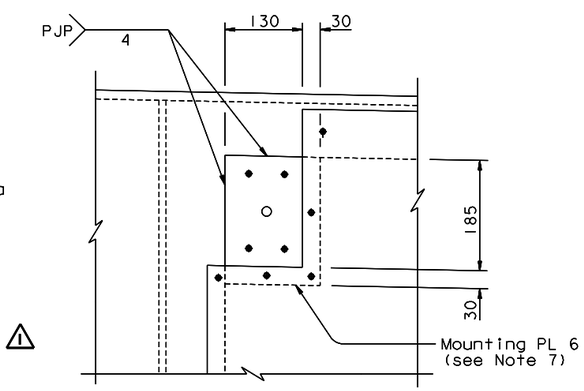

RECEPTACLE MOUNTING
1:5

LEGEND:

(C1) Tower longitudinal stiffener designation (see Note 4)

NOTES:

1. Drill holes (100 Dia Max) as required up to 4 maximum. Seal around conduits with silicone caulk with backing rods.
2. For utility layout and details, see "Road Plans".
3. Drill hole and seal to conduits as required for dehumidification conduits. For other duct penetrations, see similar "Duct Opening Detail" on "Dehumidification Support Details No.5" sheet.
4. For tower longitudinal stiffener locations, see "Tower Shaft Details" sheets.
5. Pipe connector must line up with barrier diaphragm. Sign location shall be moved to the nearest diaphragm. See "Barrier Details" sheets for barrier details. See Road Plans for sign details.
6. For each Doubler PL the Contractor shall provide four penetrations of the doubler and tower skin plates. For conduits installed under this contract the Contractor shall determine a hole size suitable to the installed conduit. The remaining penetrations shall be 100 mm diameter and shall be sealed. See Detail A.
7. For mounting screw and openings in mounting PL see "Road Plans".
8. Dimension shall be 170 at Elev 80.75, 85.25, 111.67 and 117.33.
9. For conduit and box support details, see "Road Plans".

MARK	DATE	DESCRIPTIONS	BY	CH'D	CCO#
2	01/11/08	ELECTRICAL MODIFICATIONS	NV	MN	42
1	08/24/07	BARRIER MODIFICATIONS	GB	MN	44

REVISIONS

CONTRACT CHANGE ORDER NO. _____
SHEET ___ OF ___

4 REVISED PER ADDENDUM NO. 4 DATED DECEMBER 9, 2005

ALL DIMENSIONS ARE IN MILLIMETERS UNLESS OTHERWISE SHOWN

100% PS&E

TIME 4PLOT56D => 10 JAN 2008 DATE PLOTTED => USERNAME => ptom

R. Valizadeh/V. Toan/Y.L./W.L./F.C.
DESIGN OVERSIGHT
Roya Valizadeh / Vong Toan / Y. Liu
SIGN OFF DATE 01/11/08

Rev. Date: 5-18-98

DESIGN	BY M. Nader	CHECKED T. Ho	
DETAILS	BY L. Rus	CHECKED T. Ho	
QUANTITIES	BY L. Rus	CHECKED D. Harrison	

PREPARED FOR THE STATE OF CALIFORNIA DEPARTMENT OF TRANSPORTATION

R. Manzanarez
PROJECT ENGINEER

BRIDGE NO. 34-0006L/R
KILOMETER POST 13.2/13.9

SAN FRANCISCO OAKLAND BAY BRIDGE
EAST SPAN SEISMIC SAFETY PROJECT
SELF-ANCHORED SUSPENSION BRIDGE
(SUPERSTRUCTURE & TOWER)

UTILITY DETAILS NO. 2

ORIGINAL SCALE IN MILLIMETERS FOR REDUCED PLANS 0 10 20 30 40 50 60 70 80 90 100

CU 04
EA 0120F1

DISREGARD PRINTS BEARING EARLIER REVISION DATES

REVISION DATES (PRELIMINARY STAGE ONLY) 04/08/02 07/01/02 12/14/02 11/13/05

SHEET 549R2 OF

FILE => I:\bb\04-0120F1\sas\contract plans and cco\cco\in progress\cco#42\update 12-14-07\dgn\akmsc14.dgn