DIST.	COUNTY	ROUTE	KILOMETER POST TOTAL PROJECT	SHEET NO.	TOTAL SHEETS
04	SF	80	13.2/13.9	592R1	1204

REGISTERED ENGINEER - CIVIL

12-6-04
PLANS APPROVAL DATE

REGISTERED PROFESSIONAL ENGINEER Marwan N. Nader No. C 054426 Exp. 12/31/07 CIVIL STATE OF CALIFORNIA

The State of California or its officers or agents shall not be responsible for the accuracy or completeness of electronic copies of this plan sheet.

T.Y. LIN / MOFFATT & NICHOL
825 BATTERY STREET
SAN FRANCISCO, CA 94111

Caltrans now has a web site! To get to the web site, go to: http://www.dot.ca.gov

4 REVISED PER ADDENDUM NO. 4 DATED DECEMBER 9, 2005

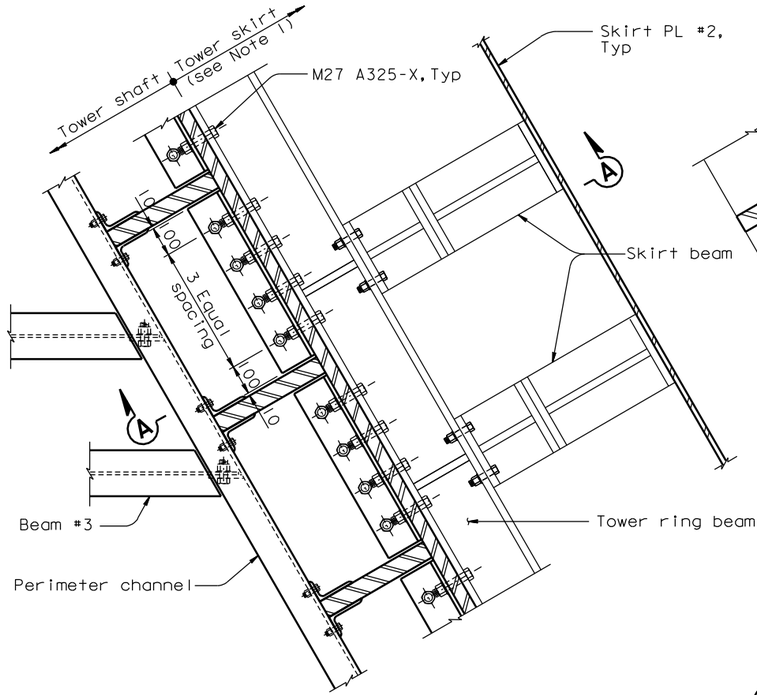

DETAIL C' (Diaphragm plate not shown for clarity) (Detail at elevation 9.000 m only)
1:10

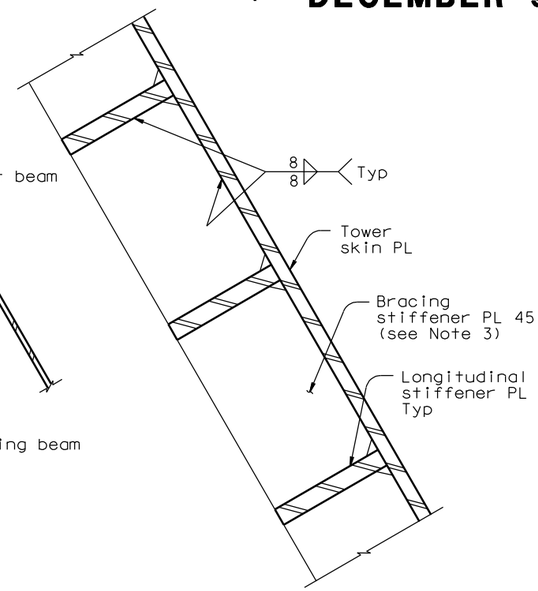

SECTION B-B
1:10

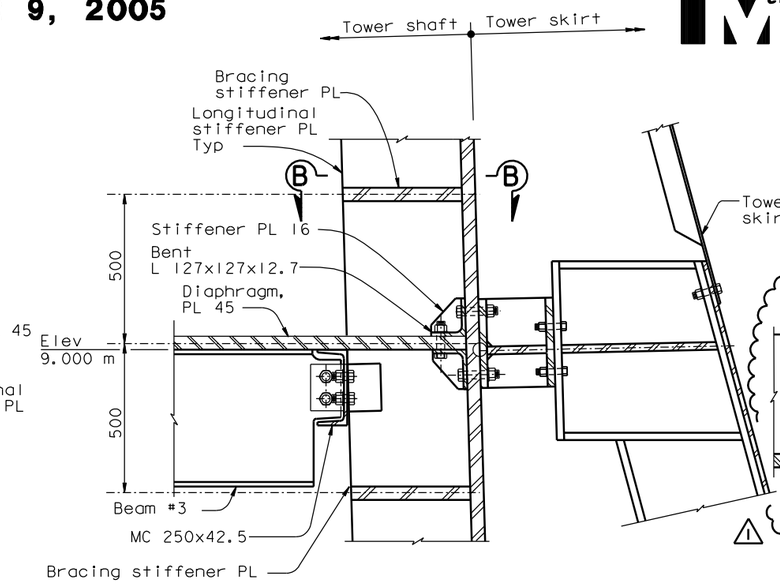

SECTION A-A (A'-A' Sim)
1:10

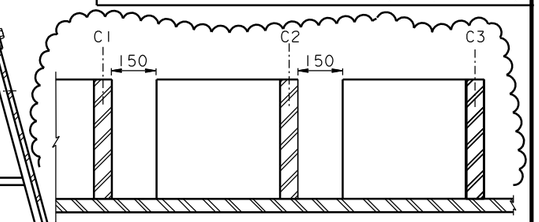

SECTION B-B (at Detail M)
1:10

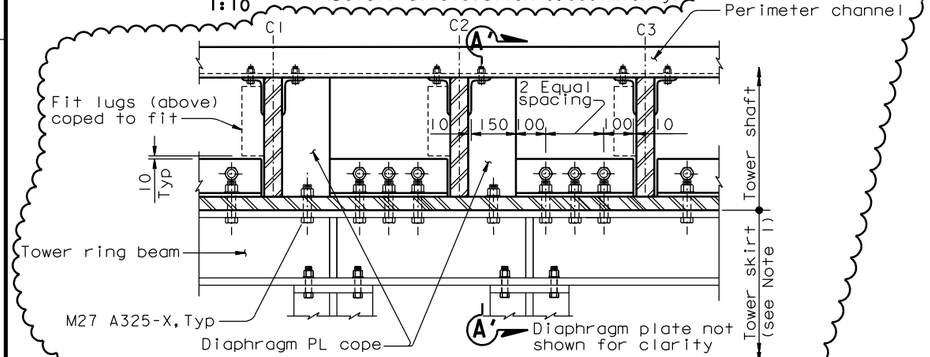

DETAIL M (Detail at elevation 9.000 m only)
1:10

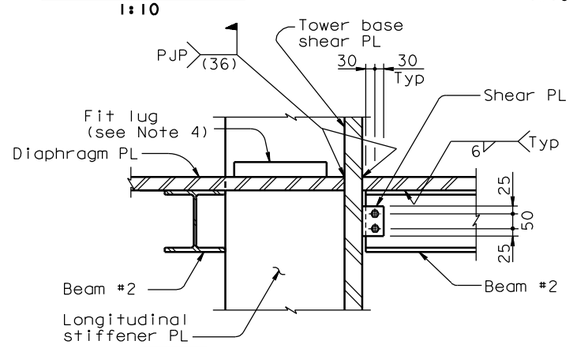

4 SECTION H'-H'
1:10
(Detail at elevation 9.000 m only)

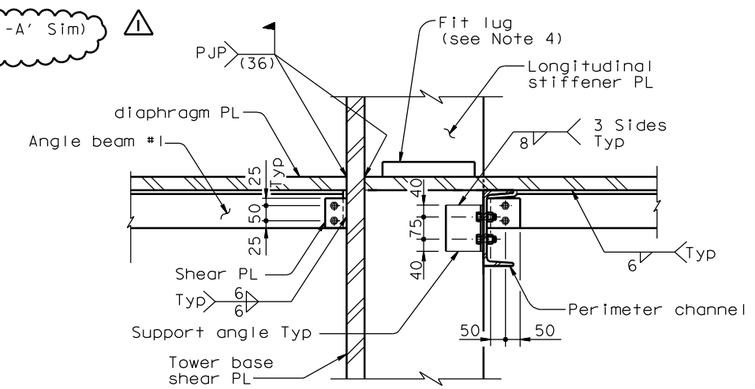

4 SECTION E'-E'
1:10
(Detail at elevation 9.000 m only)

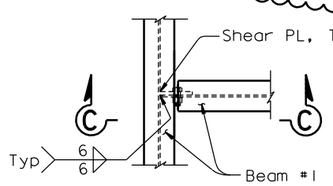

DETAIL K
1:10

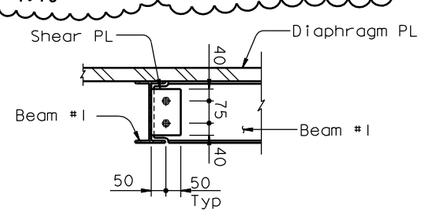

SECTION C-C
1:10

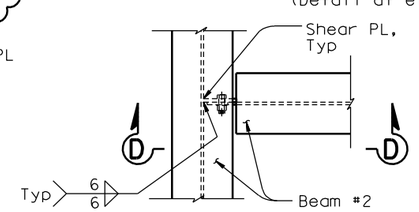

DETAIL L
1:10

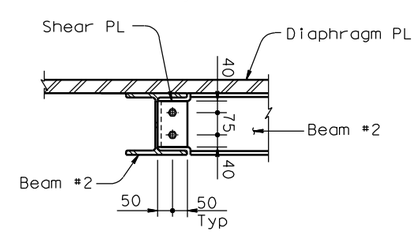

SECTION D-D
1:10

NOTES:

1. For tower skirt details, see "Tower Skirt Details No.1" sheet.
2. For typical diaphragm cutout around tower longitudinal stiffeners, see "Tower Diaphragm Details No.6" sheet.
3. Bracing stiffener plates shall be located along tower skin PL C and D, and tower base shear plates a1 and c.
4. Fit lugs for shear plates may be field welded. For fit lug details, see "Tower Diaphragm Details No.6" sheet.

ALL DIMENSIONS ARE IN MILLIMETERS UNLESS OTHERWISE SHOWN

MARK	DATE	DESCRIPTIONS	BY	CH'D	CCO#
1	09/07/07	ELECTRICAL MODIFICATIONS	NV	MN	42

REVISIONS

CONTRACT CHANGE ORDER NO. ____
SHEET ___ OF ___

R. Valizadeh/V. Toan/Y.L./W.L./F.C.
DESIGN OVERSIGHT
Ryan Valizadeh / Vong Toan / Y. Liu
SIGN OFF DATE 09/07/07

Rev. Date: 5-18-98

DESIGN	BY M. Nader	CHECKED M. Gulyas	
DETAILS	BY L. Rus	CHECKED M. Gulyas	
QUANTITIES	BY L. Rus	CHECKED Y. Zhang	

PREPARED FOR THE STATE OF CALIFORNIA DEPARTMENT OF TRANSPORTATION

R. Manzanarez
PROJECT ENGINEER

CU 04
EA 0120F1

BRIDGE NO. 34-0006L/R
KILOMETER POST 13.2/13.9

DISREGARD PRINTS BEARING EARLIER REVISION DATES

SAN FRANCISCO OAKLAND BAY BRIDGE
EAST SPAN SEISMIC SAFETY PROJECT
SELF-ANCHORED SUSPENSION BRIDGE
(SUPERSTRUCTURE & TOWER)

TOWER DIAPHRAGM DETAILS NO. 17

REVISION DATES (PRELIMINARY STAGE ONLY) 05/24/01 04/08/02 07/01/02 12/19/02 11/13/05

SHEET 175R1 OF

ORIGINAL SCALE IN MILLIMETERS FOR REDUCED PLANS 0 10 20 30 40 50 60 70 80 90 100

FILE => I:\bb\04-012001\sas\contract plans and cco\cco\in progress\cco#42\dgn\aetdh14.dgn

USERNAME => ptom

DATE PLOTTED => 07 SEP 2007 TIME PLOTTED => 10:39:19

100% PS&E