DIST	COUNTY	ROUTE	KILOMETER POST TOTAL PROJECT	SHEET No	TOTAL SHEETS
04	SF	80	13.2/13.9	209R1	1204

REGISTERED ELECTRICAL ENGINEER 12/19/02 DATE

12-6-04
PLANS APPROVAL DATE

REGISTERED PROFESSIONAL ENGINEER JENS ERLINGSSON No. 8249 Exp. 9/30/06 ELECTRICAL STATE OF CALIFORNIA

PB POWER, Inc.
A Parsons Brinckerhoff Company
303 Second St., Suite 700N
San Francisco, CA 94107-1317

The State of California or its officers or agents shall not be responsible for the accuracy or completeness of electronic copies of this plan sheet.

Caltrans now has a web site! To get to the web site, go to http://www.dot.ca.gov

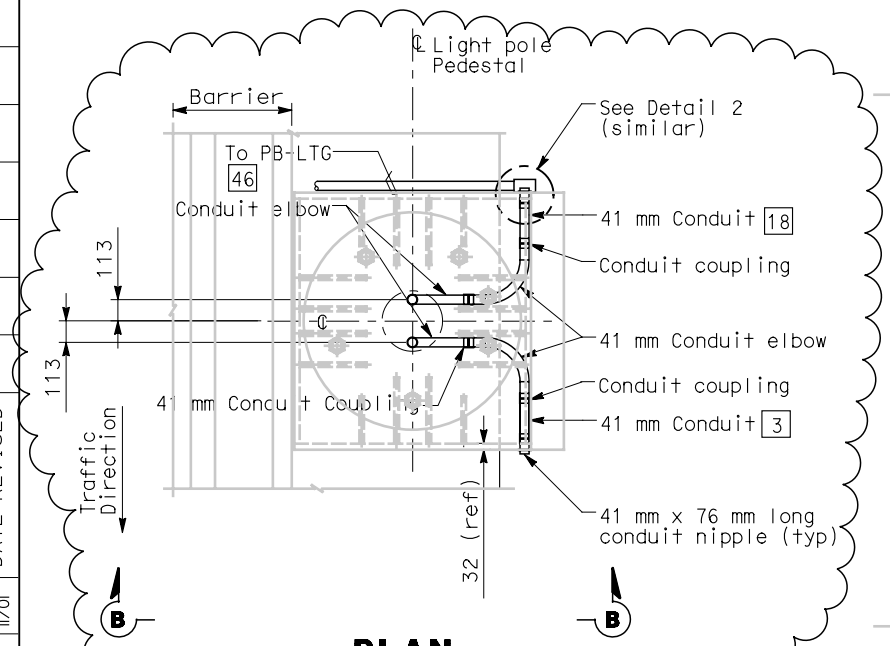

PLAN
CONDUIT STUB-UP PLAN FOR ROADWAY LIGHTING AND MVDS ON METAL BASE
SCALE 1:20

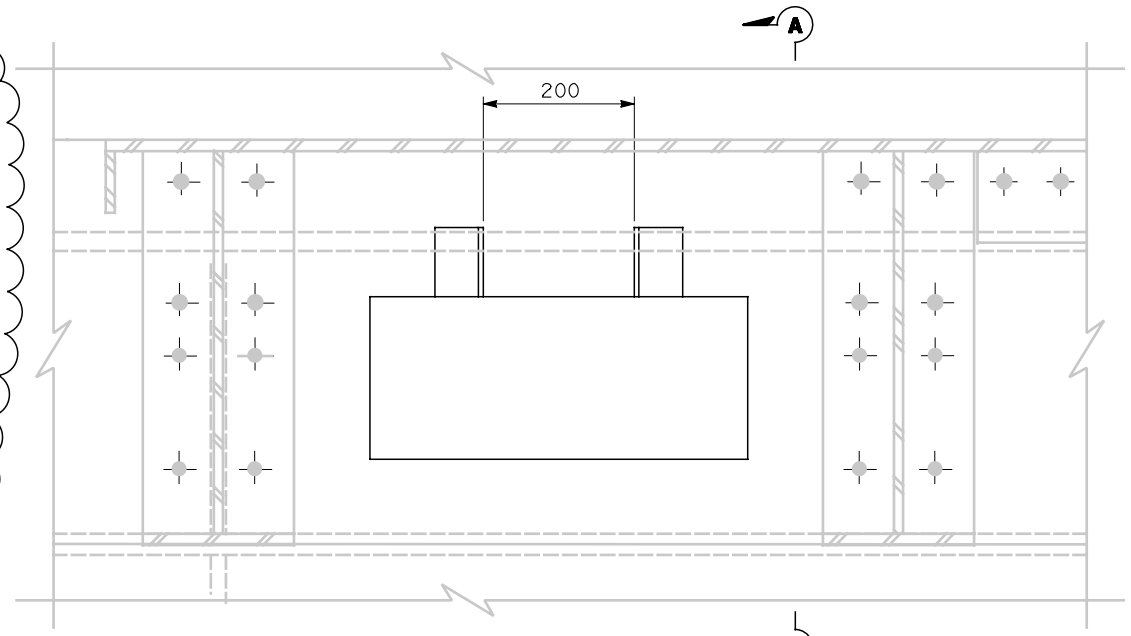

PLAN
PULL BOX IN STEEL BARRIER
SCALE 1:5

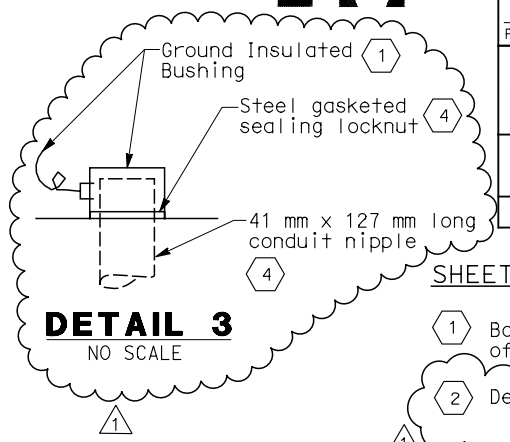

DETAIL 3
NO SCALE

SHEET NOTES:

1. Bond grounding bushing to ground lug of lighting pole with #6 bare copper wire.
2. Deleted
3. Conduit penetration through girder plate and lighting pole metal base, see Utility Detail no. 1 of superstructure and Tower Drawings. To prevent moisture from passing inside the sleeve, the Contractor shall install sealant between the sleeve and conduit.
4. Rigid steel conduits and fittings inside are part of the light pole metal pedestal. Conduit fittings shall be standard radius.

NOTES:

1. References:
   - For installation and typical details of TOS equipment, see sheets E-341 thru E-357.
   - For pull box schedule, see sheet E-169

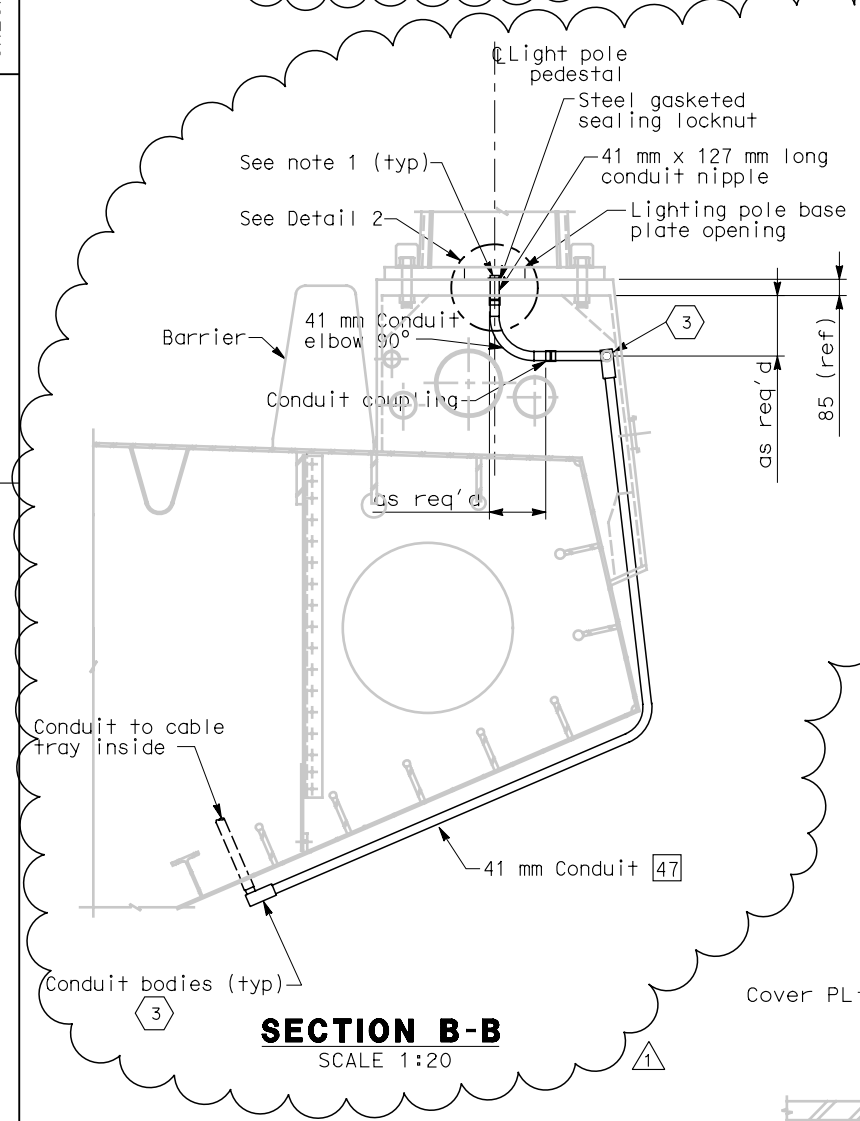

SECTION B-B
SCALE 1:20

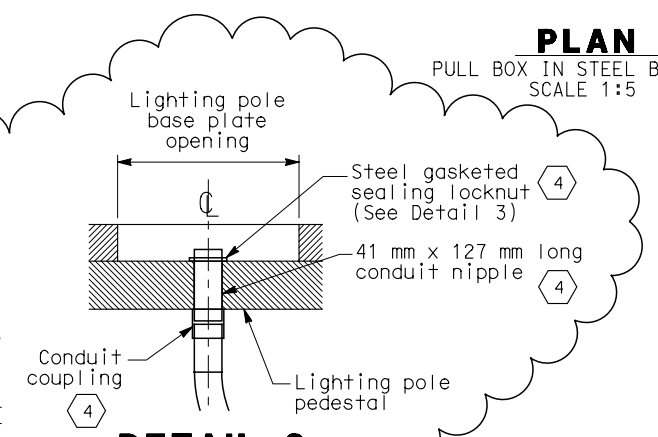

DETAIL 2
NO SCALE

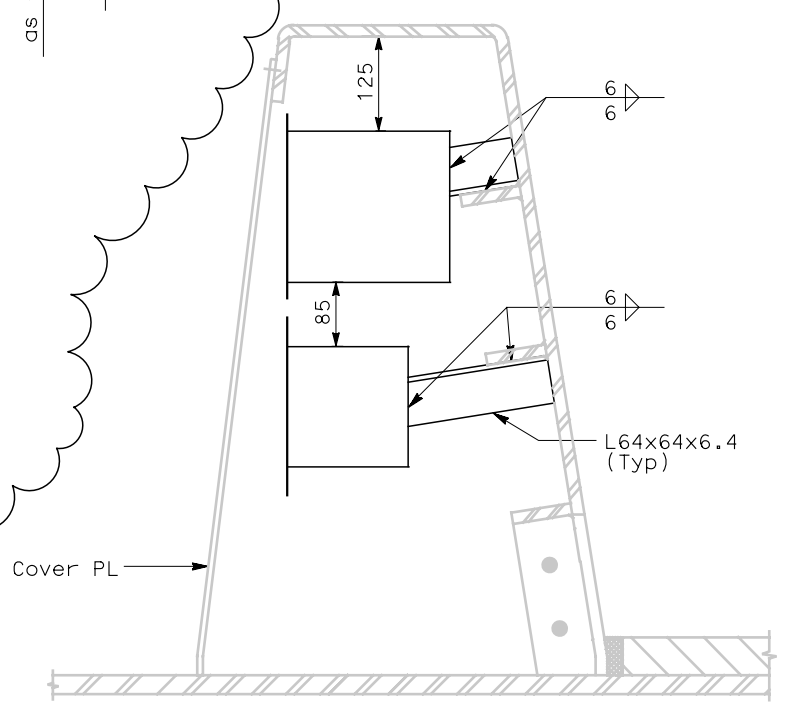

SECTION A-A
SCALE 1:5

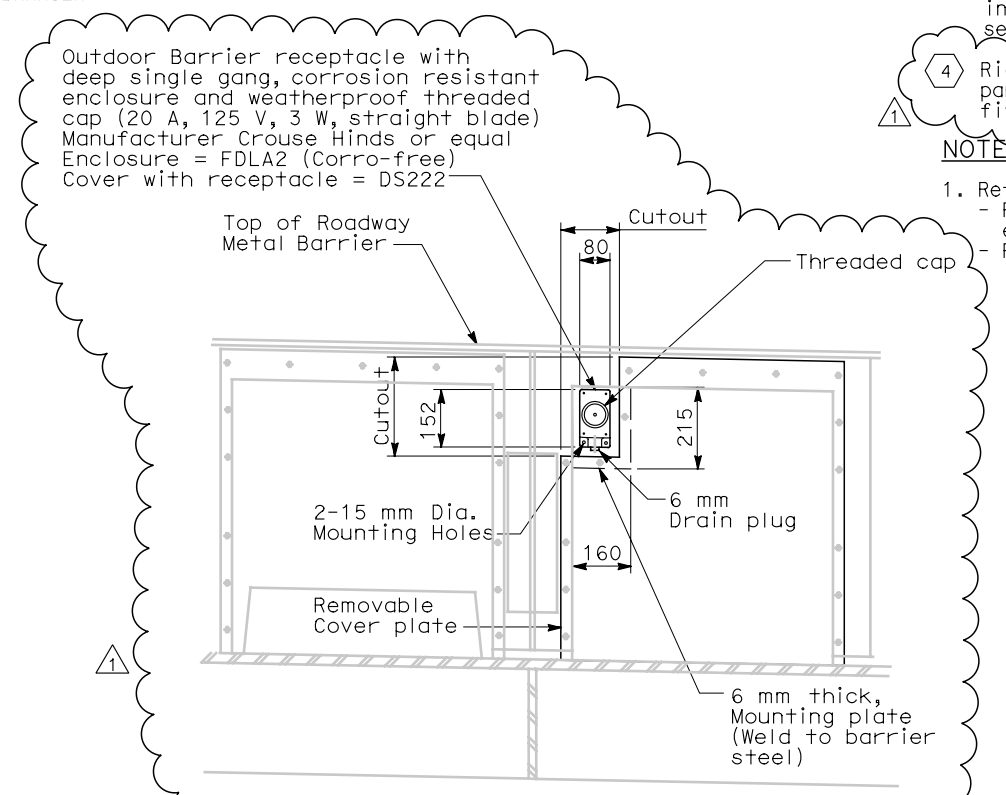

SECTION-DETAIL 1
(TYPICAL ROADWAY BARRIER RECEPTACLE LOCATION)
SCALE: 1:10

MARK	DATE	DESCRIPTIONS	BY	CK	CCO
1	8-06-07	Revision to misc. electric work. Change roadway barrier receptacle type per RFI-242. Change conduit sizes inside light pole and types from MVDS per RFI-565. RFI-261 is superseded by RFI-565.	MP EL	RR	42

REVISIONS

CONTRACT CHANGE ORDER NO. 42
SHEET x OF xx

REGISTERED PROFESSIONAL ENGINEER MARRELL FUMIO TAKAKI No. E 8651 Exp. 9/30/2008 ELECTRICAL STATE OF CALIFORNIA

REGISTERED ELECTRICAL ENGINEER

DETAILS
SAS SUPERSTRUCTURE ROADWAY EASTBOUND CONDUIT LOCATIONS
SCALE AS NOTED

E-162

STATE OF CALIFORNIA - DEPARTMENT OF TRANSPORTATION
Caltrans

DESIGN OVERSIGHT: BEHZAD GOLEMOHAMMADI

CALCULATED/ DESIGNED BY	KG	DATE 10/01	REVISED BY
CHECKED BY	AB	11/01	DATE REVISED

LAST REVISION 00-00-00 | DATE PLOTTED => 8/27/2007 | TIME PLOTTED => 7:52:27 AM

FOR REDUCED PLANS ORIGINAL SCALE IS IN MILLIMETERS 0 20 40 60 80

DGN FILE =>t:\13103\ms\pse\sas struc\cco\sas cco42\04-0120f1_0209r01.dgn
USERNAME =>reyes1

CU 04251 | EA 0120F1