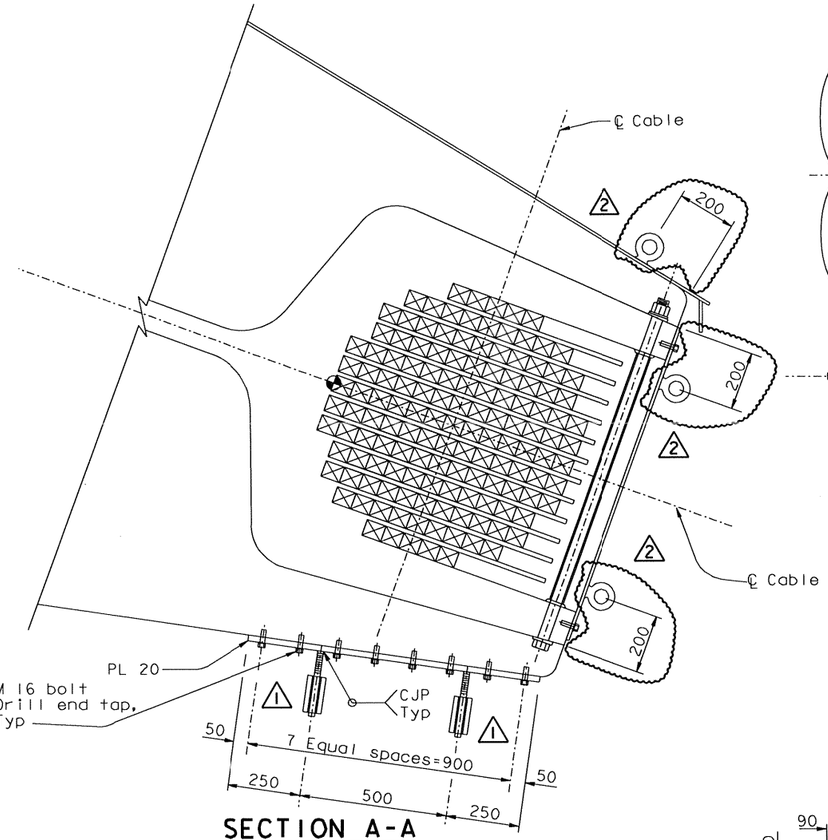


## SECTION A-A
1:10

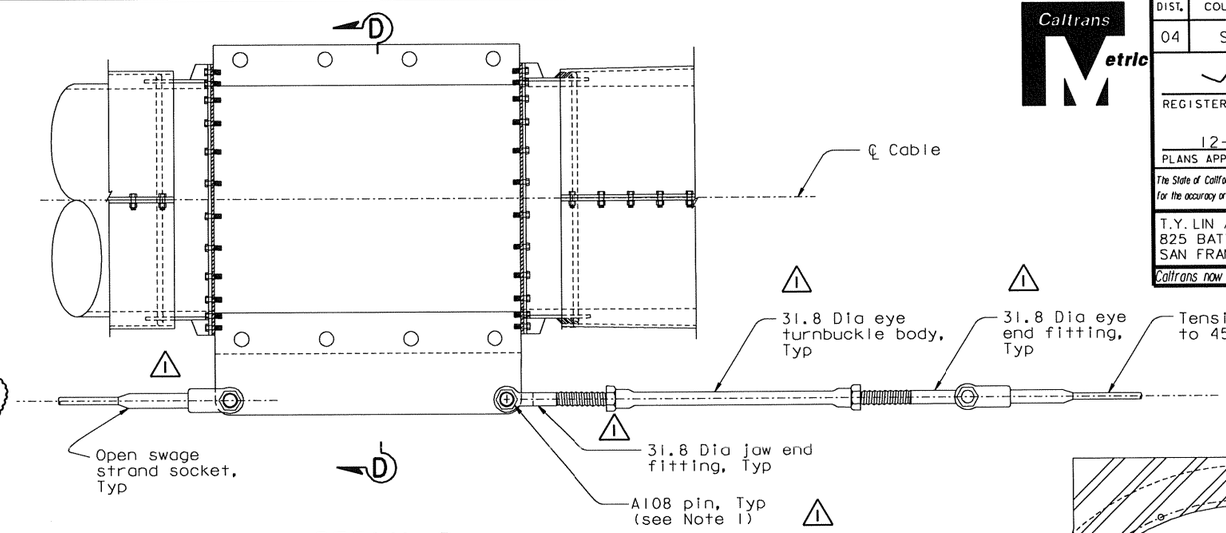


## DETAIL D (Detail C similar)
1:10

| MARK | DATE | REVISIONS DESCRIPTIONS | BY | CH'D | CCO# |
|---|---|---|---|---|---|
| 2 | 06/22/07 | WELDED PADEYES | NV | TH | 41 |
| 1 | 04/20/07 | WEST ANCHORAGE ACCESS DETAILS | GB | TH | 28 |

CONTRACT CHANGE ORDER NO. 41
SHEET 2 OF 17

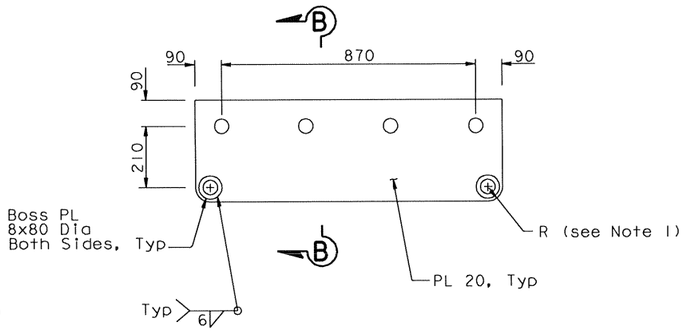


## CABLE BAND PLATE ASSEMBLY DETAIL
1:10

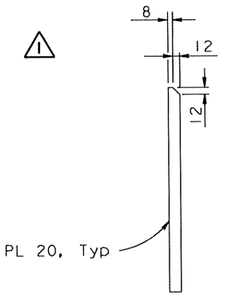


## SECTION B-B
1:5

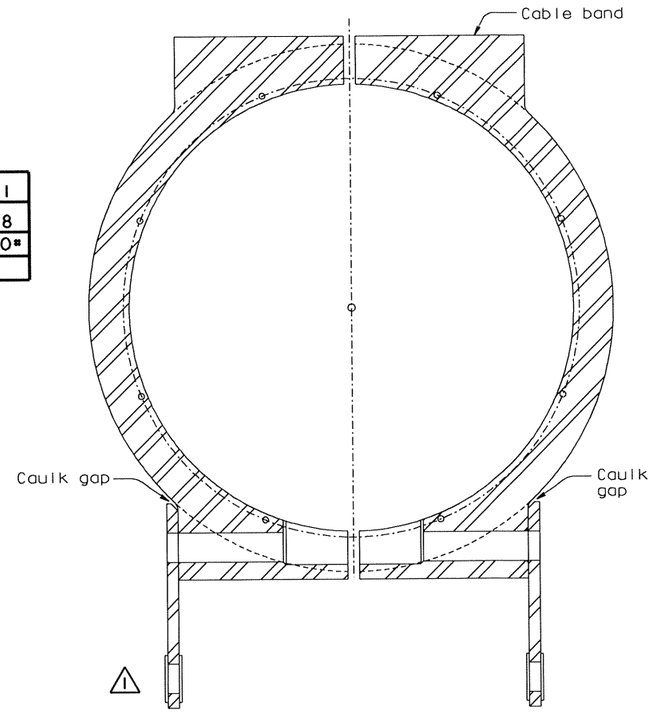


## SECTION D-D
1:5

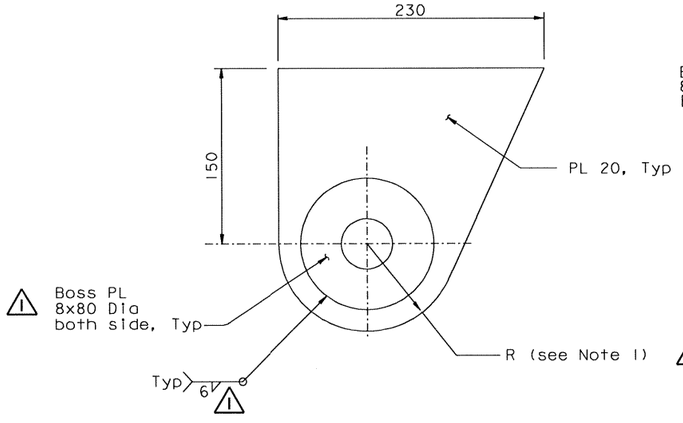


## ANCHOR PLATE ASSEMBLY DETAIL
1:2.5

NOTES:
1. For pin details see "Cable Handrope Details No.2" sheet.

ALL DIMENSIONS ARE IN MILLIMETERS UNLESS OTHERWISE SHOWN

| DIST. | COUNTY | ROUTE | KILOMETER POST TOTAL PROJECT | SHEET NO. | TOTAL SHEETS |
|---|---|---|---|---|---|
| 04 | SF | 80 | 13.2/13.9 | 912R2 | 1204 |

Caltrans Metric

REGISTERED ENGINEER - CIVIL
Tien Hung Ho
No. C 43990
Exp. 06/30/09
CIVIL
STATE OF CALIFORNIA
12-6-04
PLANS APPROVAL DATE

The State of California or its officers or agents shall not be responsible for the accuracy or completeness of electronic copies of this plan sheet.

T.Y. LIN / MOFFATT & NICHOL
825 BATTERY STREET
SAN FRANCISCO, CA 94111

Caltrans now has a web site! To get to the web site, go to: http://www.dot.ca.gov

R. Vallzadeh/V. Toan/Y.L./W.L./F.C.
DESIGN OVERSIGHT
SIGN OFF DATE 06/22/07

| | BY | CHECKED |
|---|---|---|
| DESIGN | T. Ho | N. Vo |
| DETAILS | J. Sun | N. Vo |
| QUANTITIES | T. Ho | N. Vo |

PREPARED FOR THE STATE OF CALIFORNIA DEPARTMENT OF TRANSPORTATION

R. Manzanarez
PROJECT ENGINEER

BRIDGE NO. 34-0006L/R
KILOMETER POST 13.2/13.9

CU 04
EA 0120F1

SAN FRANCISCO OAKLAND BAY BRIDGE
EAST SPAN SEISMIC SAFETY PROJECT
SELF-ANCHORED SUSPENSION BRIDGE
(SUPERSTRUCTURE & TOWER)
WEST ANCHORAGE ACCESS DETAILS NO. 3

DISREGARD PRINTS BEARING EARLIER REVISION DATES
REVISION DATES (PRELIMINARY STAGE ONLY): 08/08/99 05/31/01 04/08/02 07/01/02 12/18/02 09/06/04

SHEET 495R2 OF

Rev. Date: 5-18-98

ORIGINAL SCALE IN MILLIMETERS FOR REDUCED PLANS 0 10 20 30 40 50 60 70 80 90 100

FILE => I:\bb\04-012001\sas\contract plans and cco\cco\In progress\cco=41\dgn\akacc02e.dgn

USERNAME => ptom DATE PLOTTED => 29 JUN 2007 TIME PLOTTED => 09:52:26

100 % PS&E

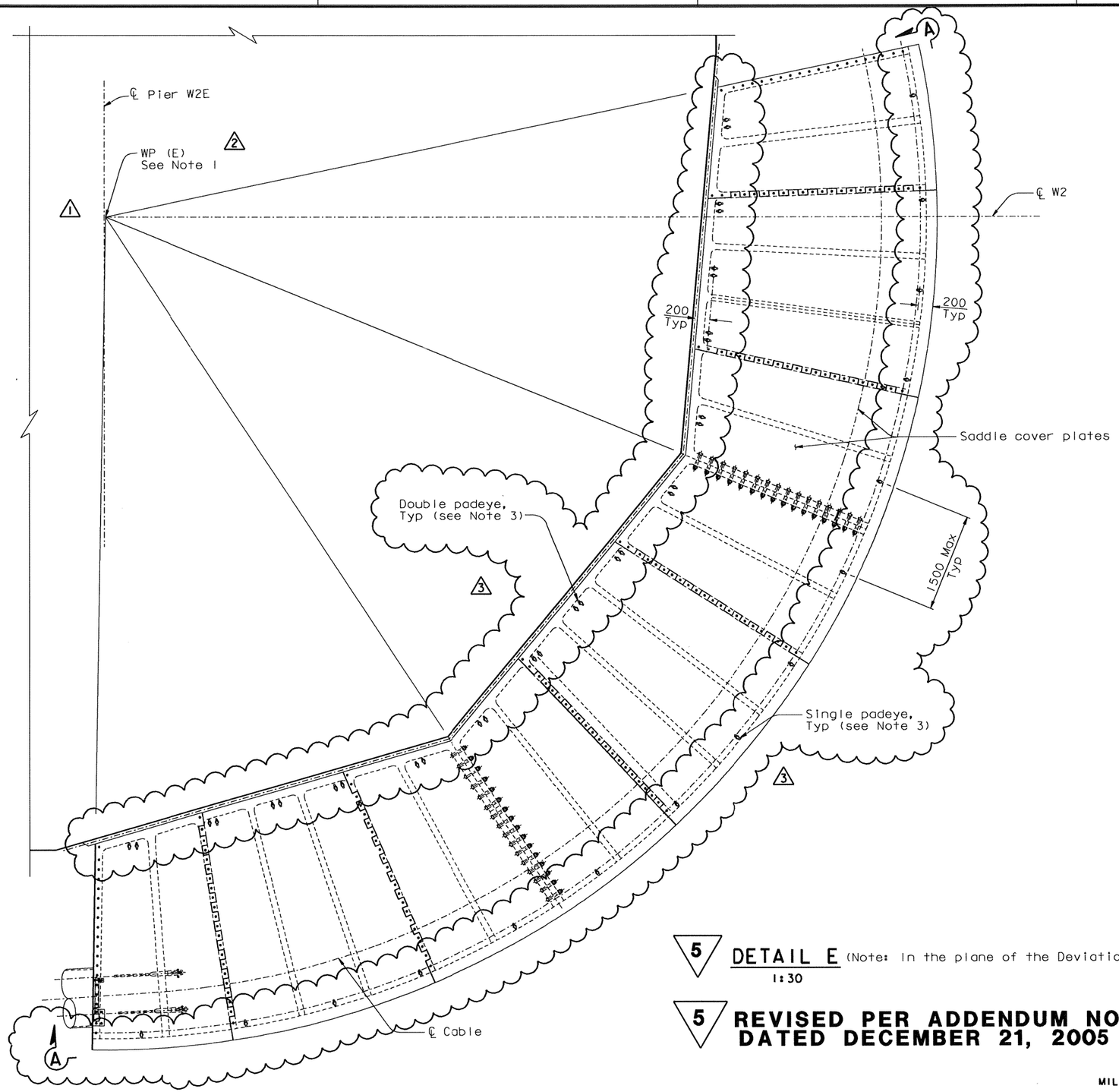


5 DETAIL E (Note: In the plane of the Deviation saddle)
1:30

5 REVISED PER ADDENDUM NO. 5
DATED DECEMBER 21, 2005

Caltrans Metric

| DIST. | COUNTY | ROUTE | KILOMETER POST TOTAL PROJECT | SHEET NO. | TOTAL SHEETS |
|---|---|---|---|---|---|
| 04 | SF | 80 | 13.2/13.9 | 913R3 | 1204 |

REGISTERED ENGINEER - CIVIL
Tien Hung Ho
No. C 43990
Exp. 06/30/09
CIVIL
REGISTERED PROFESSIONAL ENGINEER
STATE OF CALIFORNIA
12-6-04
PLANS APPROVAL DATE

The State of California or its officers or agents shall not be responsible for the accuracy or completeness of electronic copies of this plan sheet.

T.Y. LIN / MOFFATT & NICHOL
825 BATTERY STREET
SAN FRANCISCO, CA 94111

Caltrans now has a web site! To get to the web site, go to: http://www.dot.ca.gov

| MARK | DATE | REVISIONS | BY | CH'D | CCO# |
|---|---|---|---|---|---|
| 3 | 06/22/07 | WELDED PADEYES | NV | TH | 41 |
| 2 | 04/20/07 | WEST ANCHORAGE ACCESS DETAILS | GB | TH | 28 |
| 1 | 01/31/07 | WEST DEVIATION SADDLE GEOMETRY | PC | TH | 15 |

CONTRACT CHANGE ORDER NO. 41
SHEET 3 OF 17

NOTES:

1. WP(E) and WP(W) do not coincide with ℄ of Pier W2, ℄ Pier W2E nor ℄ Pier W2W.
3 2. For Section A-A see "West Anchorage Access Details No.5" sheet.
3. For double and single paceye details see "West Anchorage Access Details No.5" sheet.

ALL DIMENSIONS ARE IN MILLIMETERS UNLESS OTHERWISE SHOWN

R. Valizadeh/V. Toan/Y.L./W.L./F.C.
DESIGN OVERSIGHT
SIGN OFF DATE 06/22/07

| | BY | CHECKED |
|---|---|---|
| DESIGN | T. Ho | N. Vo |
| DETAILS | J. Sun | N. Vo |
| QUANTITIES | T. Ho | N. Vo |

PREPARED FOR THE STATE OF CALIFORNIA
DEPARTMENT OF TRANSPORTATION

R. Manzanarez
PROJECT ENGINEER

BRIDGE NO. 34-0006L/R
KILOMETER POST 13.2/13.9

SAN FRANCISCO OAKLAND BAY BRIDGE
EAST SPAN SEISMIC SAFETY PROJECT
SELF-ANCHORED SUSPENSION BRIDGE
(SUPERSTRUCTURE & TOWER)
WEST ANCHORAGE ACCESS DETAILS NO. 4

Rev. Date: 5-18-98

ORIGINAL SCALE IN MILLIMETERS FOR REDUCED PLANS 0 10 20 30 40 50 60 70 80 90 100

CU 04
EA 0120F1

DISREGARD PRINTS BEARING EARLIER REVISION DATES →
REVISION DATES (PRELIMINARY STAGE ONLY): 05/31/01 | 04/09/02 | 01/09/02 | 12/19/02 | 09/09/04 | 2/01/05

SHEET 496R3 OF

FILE => I:\bb\04-012001\sas\contract plans and cco\cco\In progress\cco#41\dgn\akacc02f.dgn

100 % PS&E
DATE PLOTTED => 03 JUL 2007 TIME PLOTTED => 11:04:11
USERNAME => ptom

| MARK | DATE | DESCRIPTIONS | BY | CH'D | CCO# |
|---|---|---|---|---|---|
| 2 | 06/22/07 | WELDED PADEYES | NV | TH | 41 |
| 1 | 04/20/07 | WEST ANCHORAGE ACCESS DETAILS | GB | TH | 28 |
| | | REVISIONS | | | |

CONTRACT CHANGE ORDER NO. 41
SHEET 4 OF 17

| DIST. | COUNTY | ROUTE | KILOMETER POST TOTAL PROJECT | SHEET NO. | TOTAL SHEETS |
|---|---|---|---|---|---|
| 04 | SF | 80 | 13.2/13.9 | 914R2 | 1204 |

Caltrans Metric

REGISTERED ENGINEER - CIVIL
12-6-04
PLANS APPROVAL DATE

REGISTERED PROFESSIONAL ENGINEER — Tien Hung Ho — No. C 43990 — Exp. 06/30/09 — CIVIL — STATE OF CALIFORNIA

The State of California or its officers or agents shall not be responsible for the accuracy or completeness of electronic copies of this plan sheet.

T.Y. LIN / MOFFATT & NICHOL
825 BATTERY STREET
SAN FRANCISCO, CA 94111

Caltrans now has a web site! To get to the web site, go to: http://www.dot.ca.gov

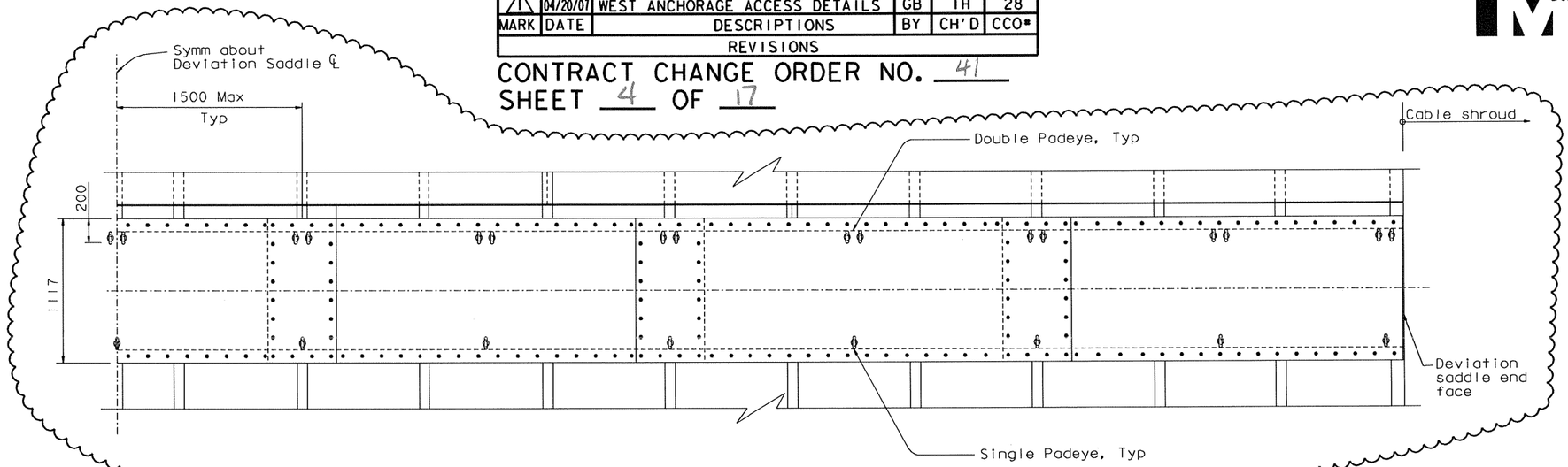


## SECTION A-A
1:20

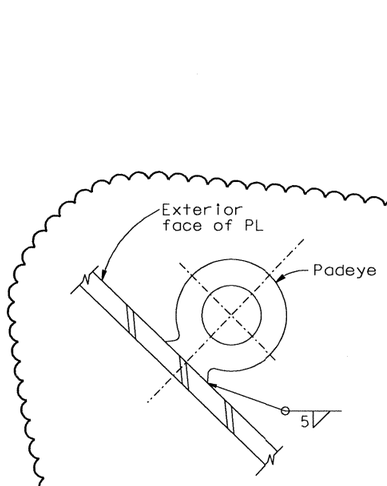


## SECTION B-B
1:1.25

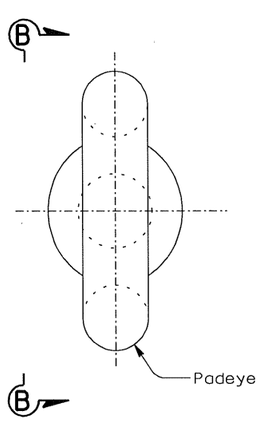


## SINGLE PADEYE DETAIL
1:1.25

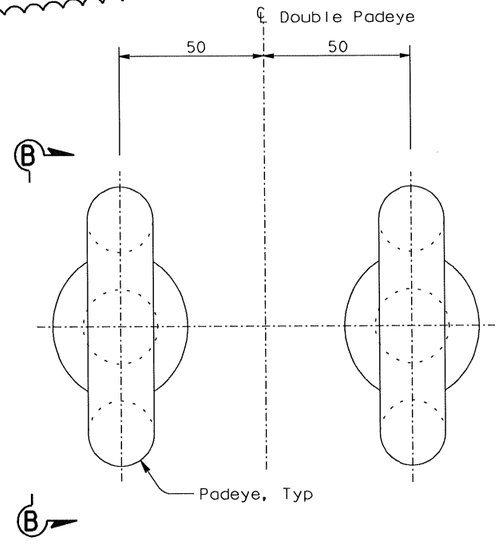


## DOUBLE PADEYE DETAIL
1:1.25

ALL DIMENSIONS ARE IN MILLIMETERS UNLESS OTHERWISE SHOWN

| | | |
|---|---|---|
| DESIGN | BY T. Ho | CHECKED N. Vo |
| DETAILS | BY J. Sun | CHECKED N. Vo |
| QUANTITIES | BY T. Ho | CHECKED N. Vo |

R. Valizadeh/V. Toan/Y.L./W.L./F.C.
DESIGN OVERSIGHT
SIGN OFF DATE 06/22/07

PREPARED FOR THE STATE OF CALIFORNIA DEPARTMENT OF TRANSPORTATION

R. Manzanarez
PROJECT ENGINEER

BRIDGE NO. 34-0006L/R
KILOMETER POST 12.6/13.9

CU 04
EA 0120F1

DISREGARD PRINTS BEARING EARLIER REVISION DATES →

REVISION DATES (PRELIMINARY STAGE ONLY): 05/17/01 | 04/08/02 | 07/01/02 | 12/19/02

SHEET 497R2 OF

SAN FRANCISCO OAKLAND BAY BRIDGE
EAST SPAN SEISMIC SAFETY PROJECT
SELF-ANCHORED SUSPENSION BRIDGE
(SUPERSTRUCTURE & TOWER)

# WEST ANCHORAGE ACCESS DETAILS NO.5

Rev. Date: 5-18-98

ORIGINAL SCALE IN MILLIMETERS FOR REDUCED PLANS 0 10 20 30 40 50 60 70 80 90 100

FILE => I:\bb\04-012001\sas\contract plans and cco\cco\In progress\cco#41\dgn\akacc02g.dgn

100% PS&E
DATE PLOTTED => 29 JUN 2007 TIME PLOTTED => 09:58:37
USERNAME => ptom

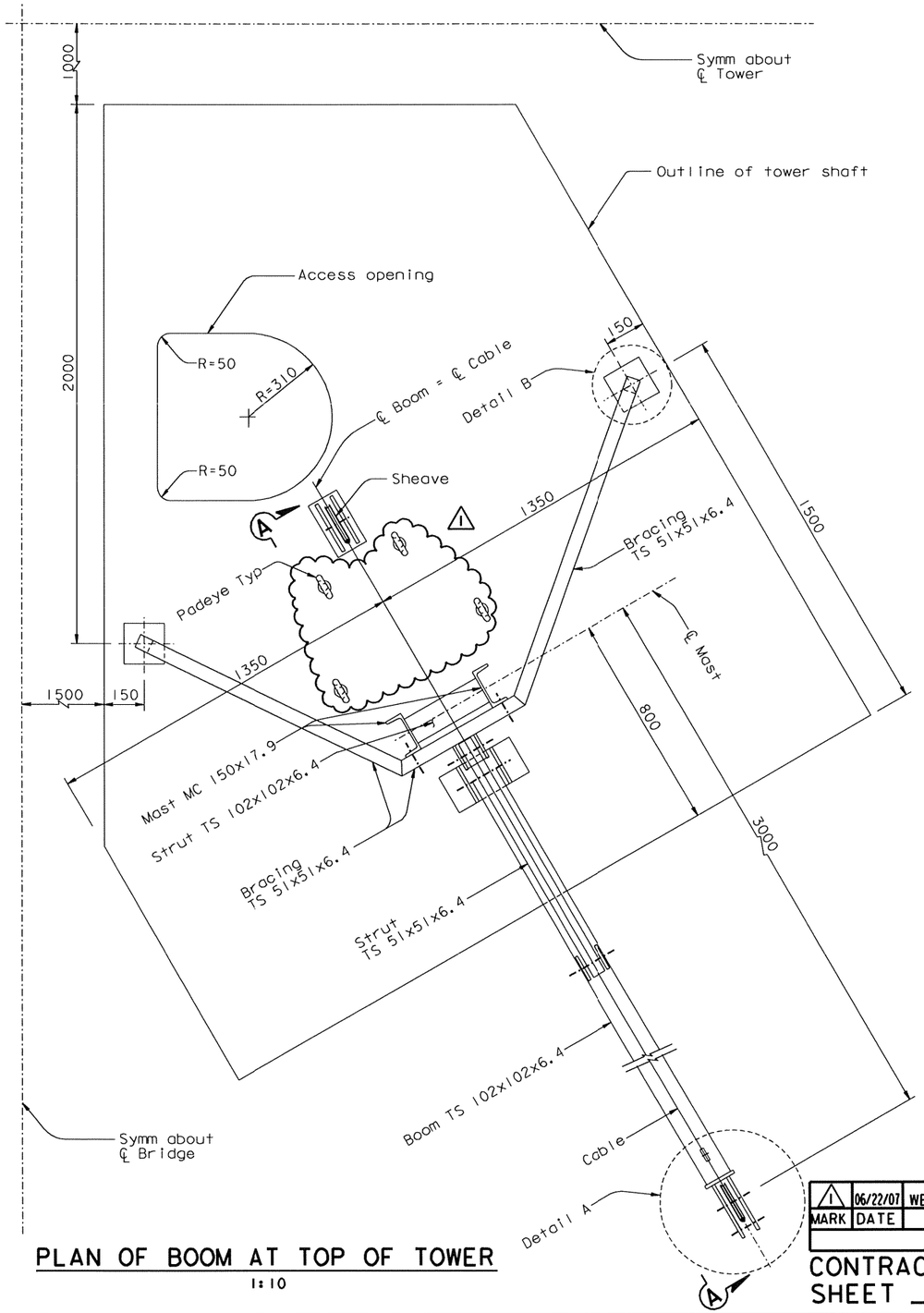


## PLAN OF BOOM AT TOP OF TOWER

1:10

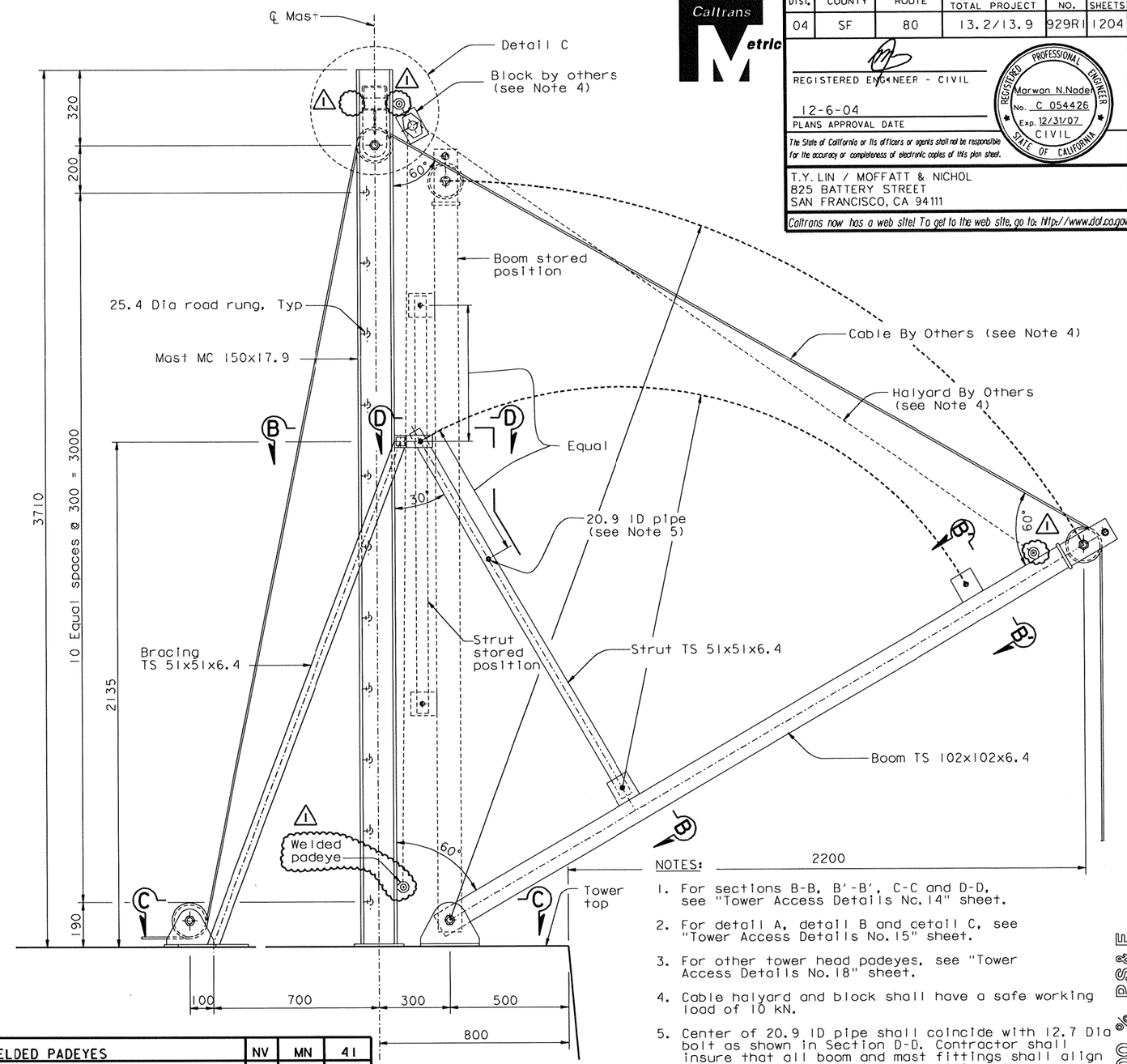


## SECTION A-A

1:10

ALL DIMENSIONS ARE IN MILLIMETERS UNLESS OTHERWISE SHOWN

NOTES:

1. For sections B-B, B'-B', C-C and D-D, see "Tower Access Details No. 14" sheet.
2. For detail A, detail B and cetail C, see "Tower Access Details No. 15" sheet.
3. For other tower head padeyes, see "Tower Access Details No. 18" sheet.
4. Cable halyard and block shall have a safe working load of 10 kN.
5. Center of 20.9 ID pipe shall coincide with 12.7 Dia bolt as shown in Section D-D. Contractor shall insure that all boom and mast fittings shall align in both stored and extended positions.
6. For Padeye typical detail and design force, see "Girder Access Details No. 10" sheet.

| MARK | DATE | DESCRIPTIONS | BY | CH'D | CCO# |
|---|---|---|---|---|---|
| 1 | 06/22/07 | WELDED PADEYES | NV | MN | 41 |
| | | REVISIONS | | | |

CONTRACT CHANGE ORDER NO. 41
SHEET 5 OF 17

| DIST. | COUNTY | ROUTE | KILOMETER POST TOTAL PROJECT | SHEET NO. | TOTAL SHEETS |
|---|---|---|---|---|---|
| 04 | SF | 80 | 13.2/13.9 | 929R1 | 1204 |

REGISTERED ENGINEER - CIVIL

12-6-04
PLANS APPROVAL DATE

REGISTERED PROFESSIONAL ENGINEER — Marwan N.Nader — No. C 054426 — Exp. 12/31/07 — CIVIL — STATE OF CALIFORNIA

The State of California or its officers or agents shall not be responsible for the accuracy or completeness of electronic copies of this plan sheet.

T.Y. LIN / MOFFATT & NICHOL
825 BATTERY STREET
SAN FRANCISCO, CA 94111

Caltrans now has a web site! To get to the web site, go to: http://www.dot.ca.gov

R. Vallizadeh/V. Toan/Y.L./W.L./F.C.
DESIGN OVERSIGHT
Reza Vallizadeh / Vong Toan / Y. Liu
SIGN OFF DATE 06/22/07

| | BY | CHECKED |
|---|---|---|
| DESIGN | M. Nader | N. Vo |
| DETAILS | G. Baker | N. Vo |
| QUANTITIES | G. Baker | N. Vo |

PREPARED FOR THE STATE OF CALIFORNIA
DEPARTMENT OF TRANSPORTATION

R. Manzanarez
PROJECT ENGINEER

BRIDGE NO. 34-0006L/R
KILOMETER POST 13.2/13.9

SAN FRANCISCO OAKLAND BAY BRIDGE
EAST SPAN SEISMIC SAFETY PROJECT
SELF-ANCHORED SUSPENSION BRIDGE
(SUPERSTRUCTURE & TOWER)

# TOWER ACCESS DETAILS NO. 13

Rev. Date: 5-18-98

ORIGINAL SCALE IN MILLIMETERS FOR REDUCED PLANS 0 10 20 30 40 50 60 70 80 90 100

CU 04
EA 0120F1

DISREGARD PRINTS BEARING EARLIER REVISION DATES

REVISION DATES (PRELIMINARY STAGE ONLY): 04/08/02 | 07/01/02 | 12/19/02

SHEET 512R1 OF

FILE => I:\bb\04-012001\sas\contract plans and cco\cco\In progress\cco#41\dgn\akacc13b.dgn

USERNAME => ptom
DATE PLOTTED => 29 JUN 2007
TIME PLOTTED => 10:00:38
100% PS&E

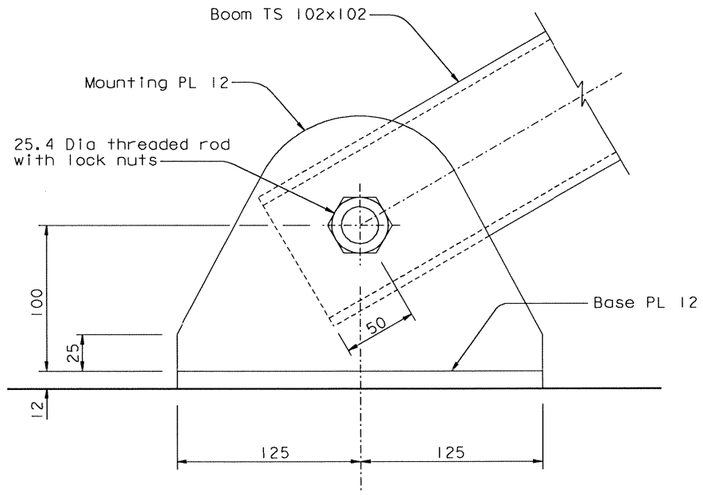


## VIEW F-F
1:2

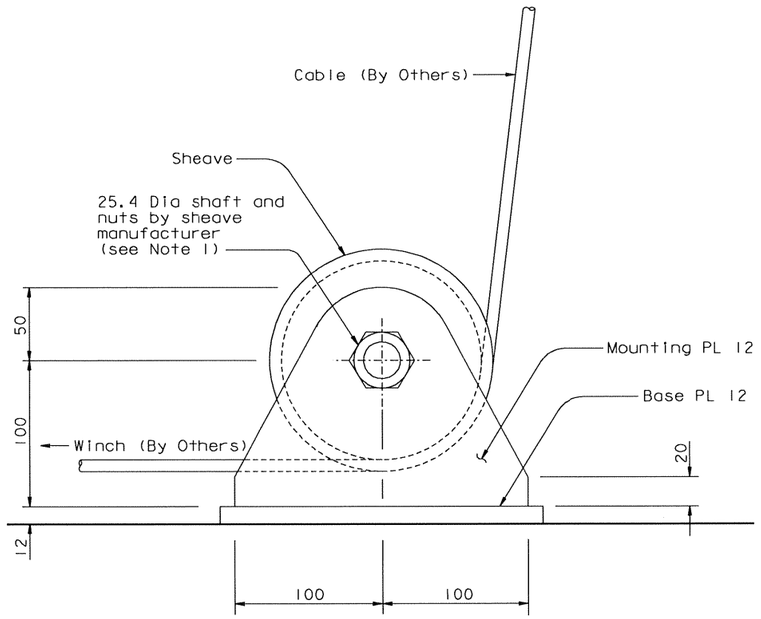


## VIEW E-E
1:2

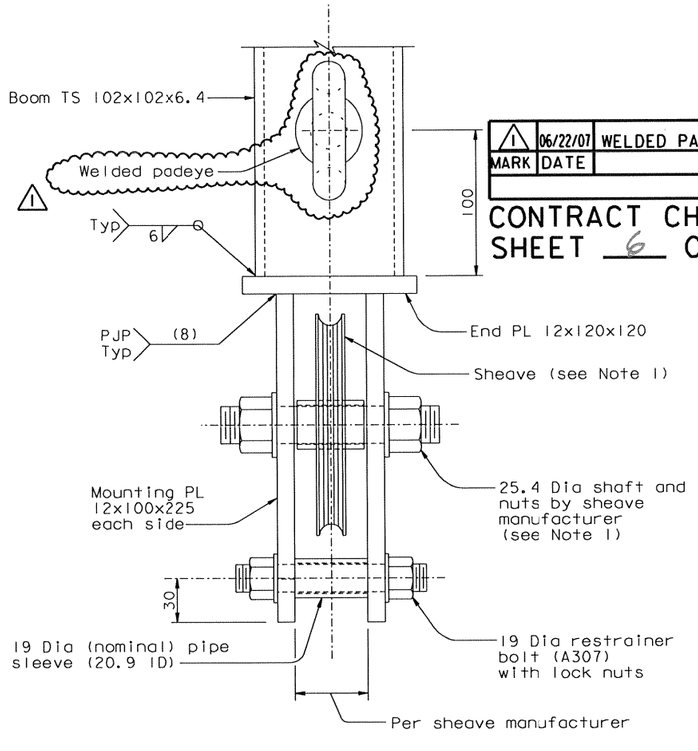


## DETAIL A
1:2

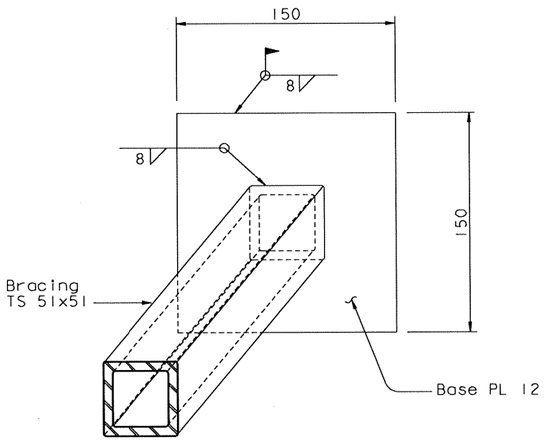


## DETAIL B
1:2

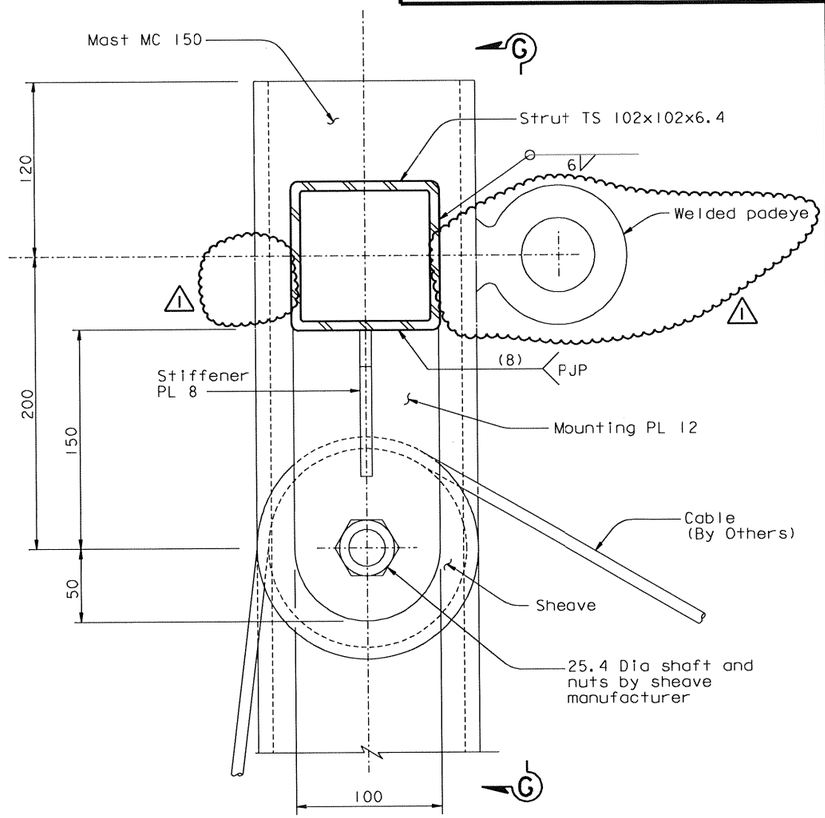


## DETAIL C
1:2

NOTES:

1. Sheaves shall be 150 mm Dia with 10 mm groove and a minimum safe working load of 20 kN. Contractor shall provide fasteners for sheaves.
2. For View G-G, see "Tower Access Details No.16" sheet.
3. For padeye typical detail and design force, see "Girder Access Details No.10" sheet.

| MARK | DATE | DESCRIPTIONS | BY | CH'D | CCO# |
|---|---|---|---|---|---|
| 1 | 06/22/07 | WELDED PADEYES | NV | MN | 41 |

REVISIONS

CONTRACT CHANGE ORDER NO. 41
SHEET 6 OF 17

| DIST. | COUNTY | ROUTE | KILOMETER POST TOTAL PROJECT | SHEET NO. | TOTAL SHEETS |
|---|---|---|---|---|---|
| 04 | SF | 80 | 13.2/13.9 | 931R1 | 1204 |

REGISTERED ENGINEER - CIVIL
12-6-04
PLANS APPROVAL DATE

REGISTERED PROFESSIONAL ENGINEER — Marwan N.Nader — No. C 54426 — Exp. 12/31/07 — CIVIL — STATE OF CALIFORNIA

The State of California or its officers or agents shall not be responsible for the accuracy or completeness of electronic copies of this plan sheet.

T.Y. LIN / MOFFATT & NICHOL
825 BATTERY STREET
SAN FRANCISCO, CA 94111

Caltrans now has a web site! To get to the web site, go to: http://www.dot.ca.gov

ALL DIMENSIONS ARE IN MILLIMETERS UNLESS OTHERWISE SHOWN

R. Valizadeh/V. Toan/Y.L./W.L./F.C.
DESIGN OVERSIGHT
SIGN OFF DATE 06/22/07

| | BY | CHECKED |
|---|---|---|
| DESIGN | M. Nader | N. Vo |
| DETAILS | G. Baker | N. Vo |
| QUANTITIES | G. Baker | N. Vo |

PREPARED FOR THE STATE OF CALIFORNIA
DEPARTMENT OF TRANSPORTATION

R. Manzanarez
PROJECT ENGINEER

BRIDGE NO. 34-0006L/R
KILOMETER POST 13.2/13.9

CU 04
EA 0120F1

DISREGARD PRINTS BEARING EARLIER REVISION DATES →
REVISION DATES (PRELIMINARY STAGE ONLY): 04/26/02 07/01/02 12/19/02

SHEET 514R1 OF

SAN FRANCISCO OAKLAND BAY BRIDGE
EAST SPAN SEISMIC SAFETY PROJECT
SELF-ANCHORED SUSPENSION BRIDGE
(SUPERSTRUCTURE & TOWER)

# TOWER ACCESS DETAILS NO. 15

Rev. Date: 5-18-98

ORIGINAL SCALE IN MILLIMETERS FOR REDUCED PLANS 0 10 20 30 40 50 60 70 80 90 100

FILE => I:\bb\04-0120I\sas\contract plans and cco\cco\In progress\cco#41\dgn\akacc15b.dgn

100% PS&E
DATE PLOTTED => 29 JUN 2007 TIME PLOTTED => 10:02:04
USERNAME => ptom

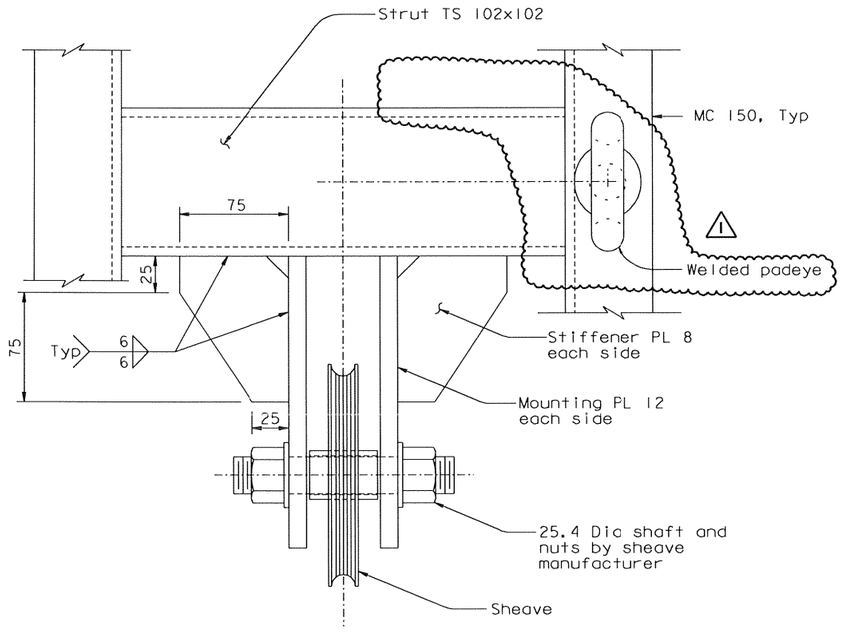


## VIEW G-G
1:2

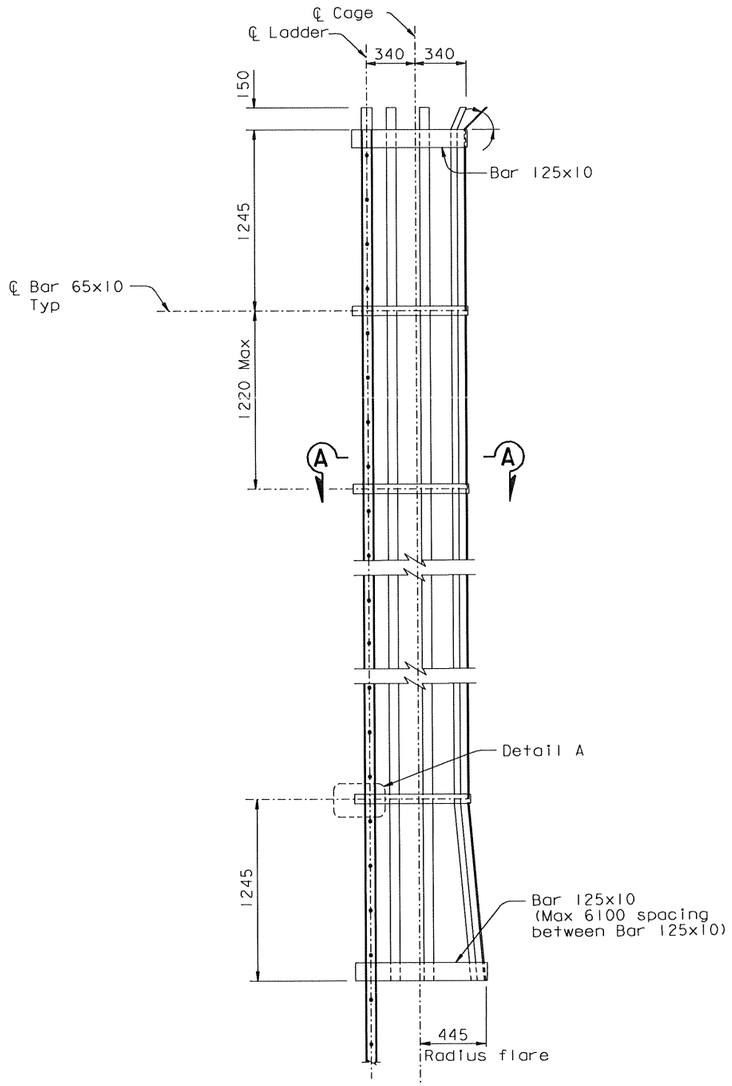


## LADDER SAFETY CAGE ELEVATION
1:20

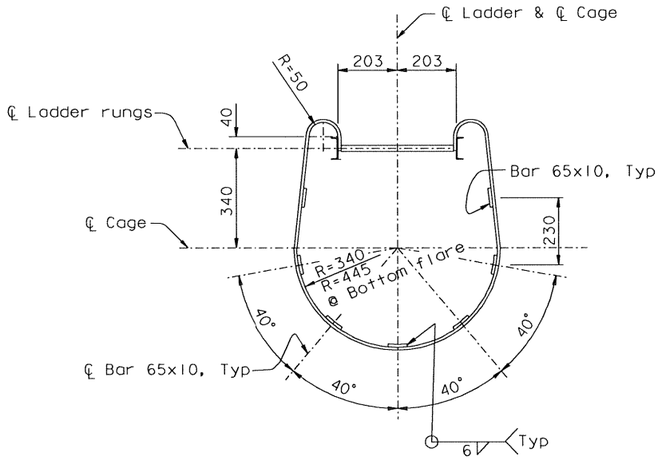


## SECTION A-A (Rotated 90° clockwise)
1:10

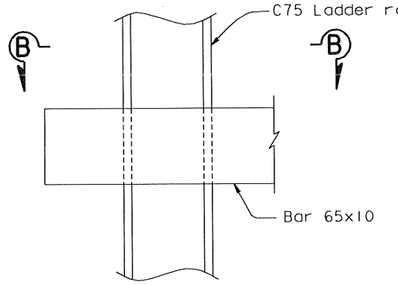


## DETAIL A
1:2.5

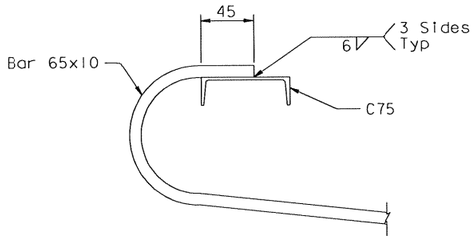


## SECTION B-B
1:2.5

NOTES:

1. For ladder details, see "Tower Access Details No. 7" sheet.
2. For Padeye typical details and design force, see "Girder Access Details No.10" sheet.

| MARK | DATE | DESCRIPTIONS | BY | CH'D | CCO# |
|---|---|---|---|---|---|
| | | REVISIONS | | | |
| 1 | 06/22/07 | WELDED PADEYES | NV | MN | 41 |

CONTRACT CHANGE ORDER NO. 41
SHEET 7 OF 17

ALL DIMENSIONS ARE IN MILLIMETERS UNLESS OTHERWISE SHOWN

| DIST. | COUNTY | ROUTE | KILOMETER POST TOTAL PROJECT | SHEET NO. | TOTAL SHEETS |
|---|---|---|---|---|---|
| 04 | SF | 80 | 13.2/13.9 | 932R1 | 1204 |

REGISTERED ENGINEER - CIVIL
12-6-04
PLANS APPROVAL DATE
REGISTERED PROFESSIONAL ENGINEER Marwan N.Nader No. C 54426 Exp. 12/31/07 CIVIL STATE OF CALIFORNIA
The State of California or its officers or agents shall not be responsible for the accuracy or completeness of electronic copies of this plan sheet.

T.Y. LIN / MOFFATT & NICHOL
825 BATTERY STREET
SAN FRANCISCO, CA 94111

Caltrans now has a web site! To get to the web site, go to: http://www.dot.ca.gov

R. Valizadeh/V. Toan/Y.L./W.L./F.C.
DESIGN OVERSIGHT
SIGN OFF DATE 06/22/07

| | BY | CHECKED |
|---|---|---|
| DESIGN | M. Nader | N. Vo |
| DETAILS | G. Baker | N. Vo |
| QUANTITIES | G. Baker | N. Vo |

PREPARED FOR THE STATE OF CALIFORNIA DEPARTMENT OF TRANSPORTATION

R. Manzanarez
PROJECT ENGINEER

CU 04
EA 0120F1

BRIDGE NO. 34-0006L/R
KILOMETER POST 13.2/13.9

SAN FRANCISCO OAKLAND BAY BRIDGE
EAST SPAN SEISMIC SAFETY PROJECT
SELF-ANCHORED SUSPENSION BRIDGE
(SUPERSTRUCTURE & TOWER)

# TOWER ACCESS DETAILS NO. 16

DISREGARD PRINTS BEARING EARLIER REVISION DATES →
REVISION DATES (PRELIMINARY STAGE ONLY): 08/08/02 09/09/02 12/19/02
SHEET 515R1 OF

Rev. Date: 5-18-98

ORIGINAL SCALE IN MILLIMETERS FOR REDUCED PLANS 0 10 20 30 40 50 60 70 80 90 100

FILE => I:\bb\04-012001\sas\contract plans and cco\cco\in progress\cco#41\dgn\akacc16b.dgn

100 % PS&E
DATE PLOTTED => 29 JUN 2007 TIME PLOTTED => 10:03:51
USERNAME => dtom

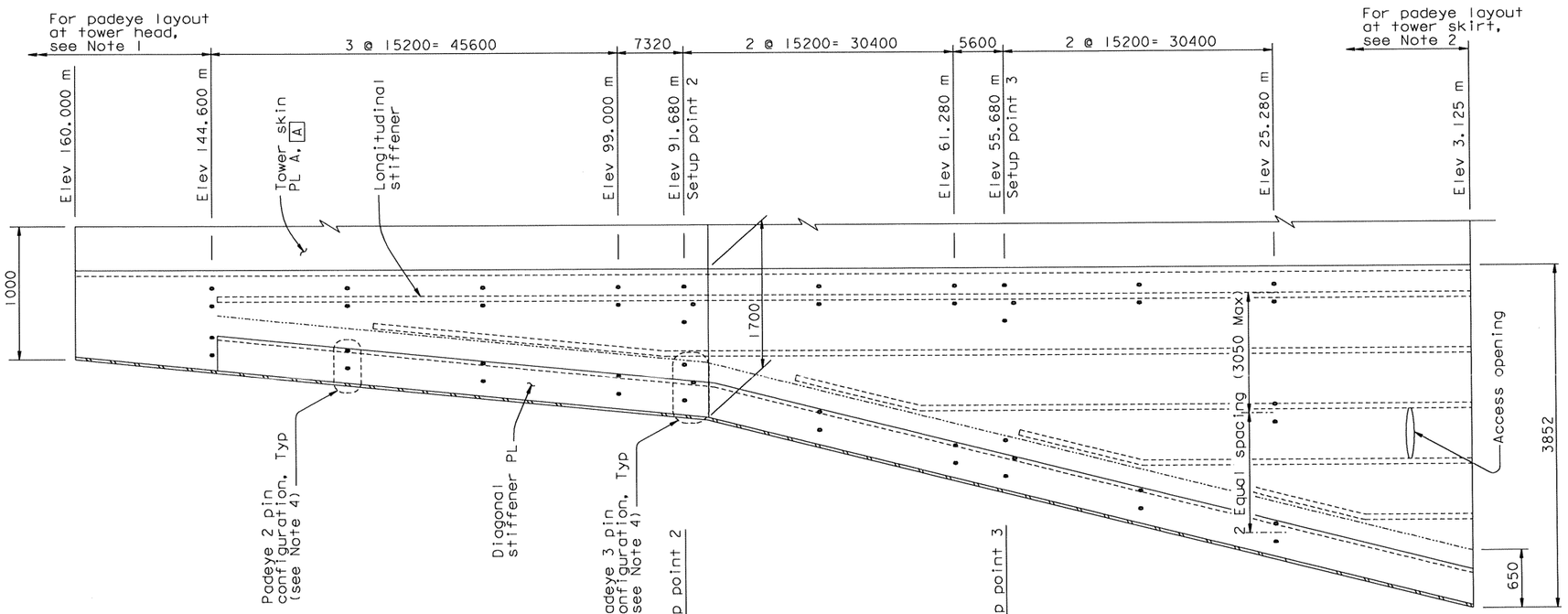


## SECTION B-B
(Elevation of Skin Plate "B" Skin Plate "C" and "D" similar)
Horiz = 1:30
Vert = 1:300

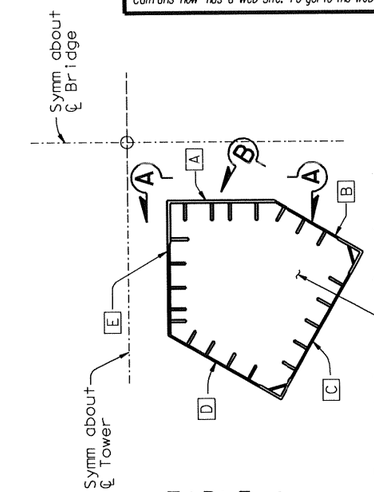


## KEY PLAN

## TABLE 1

| Setup Points | Elevation | Pin Configuration |
|---|---|---|
| 1 | 159.800 m | 3 |
| 2 | 91.680 m | 3 |
| 3 | 55.680 m | 3 |
| 4 | 12.600 m | 4 |

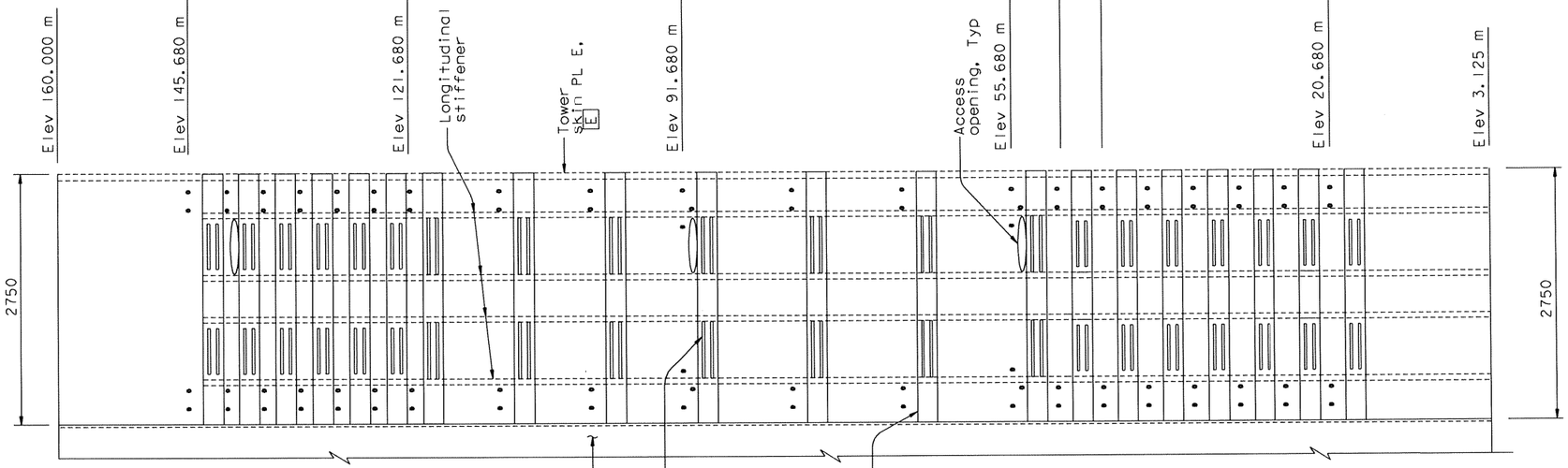


## SECTION A-A
(Elevation of Skin Plate "A" Skin Plate "E" similar)
Horiz = 1:30
Vert = 1:300

LEGEND:

- [D] Tower skin PL designation
- • Pad eye

NOTES:

1. For padeye layout at tower head, see "Tower Access Details No. 18" sheet.
2. For padeye layout at tower skirt, see "Tower Access Details No. 20" sheet.
3. For tower shaft details, see "Tower Shaft Details" sheets.
4. For padeye pin configuration details, see "Tower Access Details No. 22" sheet.
5. ⚠ For padeye typical detail and design force, see "Girder Access Details No. 10" sheet.

# PAD EYE LAYOUT AT TOWER SHAFTS

100 % PS&E

| DIST. | COUNTY | ROUTE | KILOMETER POST TOTAL PROJECT | SHEET NO. | TOTAL SHEETS |
|---|---|---|---|---|---|
| 04 | SF | 80 | 13.2/13.9 | 933R1 | 1204 |

REGISTERED ENGINEER - CIVIL

12-6-04
PLANS APPROVAL DATE

Marwan N. Nader, No. C 054426, Exp. 12/31/07, CIVIL — REGISTERED PROFESSIONAL ENGINEER — STATE OF CALIFORNIA

The State of California or its officers or agents shall not be responsible for the accuracy or completeness of electronic copies of this plan sheet.

T.Y. LIN / MOFFATT & NICHOL
825 BATTERY STREET
SAN FRANCISCO, CA 94111

Caltrans now has a web site! To get to the web site, go to: http://www.dot.ca.gov

| MARK | DATE | DESCRIPTIONS | BY | CH'D | CCO# |
|---|---|---|---|---|---|
| | | REVISIONS | | | |
| 1 | 06/22/07 | WELDED PADEYES | NV | MN | 41 |

CONTRACT CHANGE ORDER NO. 41
SHEET 8 OF 17

ALL DIMENSIONS ARE IN MILLIMETERS UNLESS OTHERWISE SHOWN

SAN FRANCISCO OAKLAND BAY BRIDGE
EAST SPAN SEISMIC SAFETY PROJECT
SELF-ANCHORED SUSPENSION BRIDGE
(SUPERSTRUCTURE & TOWER)

TOWER ACCESS DETAILS NO. 17

R. Valizadeh/V. Toan/Y.L./W.L./F.C.
DESIGN OVERSIGHT
SIGN OFF DATE 06/22/07

| | BY | CHECKED |
|---|---|---|
| DESIGN | M. Nader | N. Vo |
| DETAILS | L. Rus | D. Harrison |
| QUANTITIES | L. Rus | D. Harrison |

PREPARED FOR THE STATE OF CALIFORNIA DEPARTMENT OF TRANSPORTATION

R. Manzanarez
PROJECT ENGINEER

BRIDGE NO. 34-0006L/R
KILOMETER POST 13.2/13.9

CU 04
EA 0120F1

DISREGARD PRINTS BEARING EARLIER REVISION DATES →

REVISION DATES (PRELIMINARY STAGE ONLY): 04/06/02 07/29/02 12/19/02

SHEET 516R1 OF

Rev. Date: 5-18-98

ORIGINAL SCALE IN MILLIMETERS FOR REDUCED PLANS 0 10 20 30 40 50 60 70 80 90 100

FILE => I:\bb\04-012001\sas\contract plans and cco\cco\In progress\cco#41\dgn\akacc17.dgn

DATE PLOTTED => 29 JUN 2007 TIME PLOTTED => 10:05:09
USERNAME => ptom

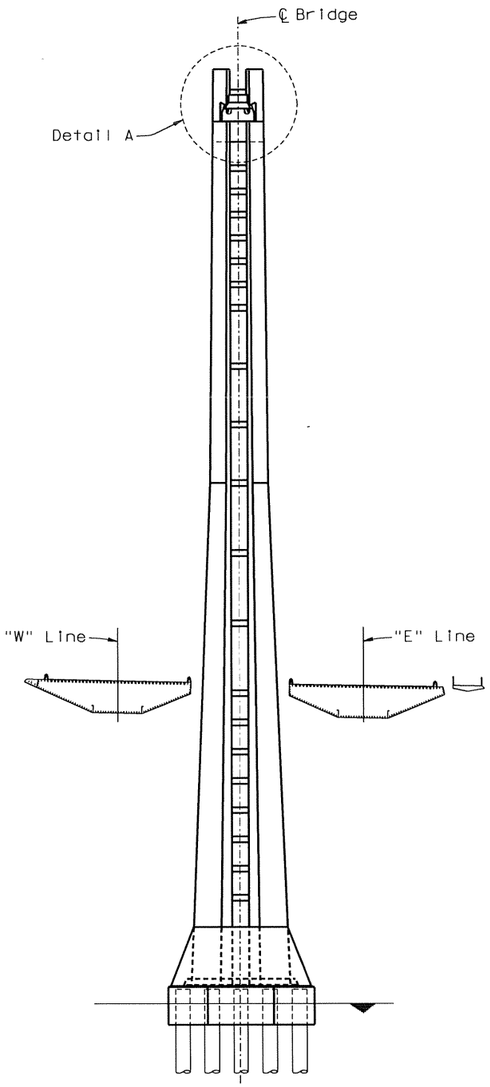


## KEY ELEVATION
1:500

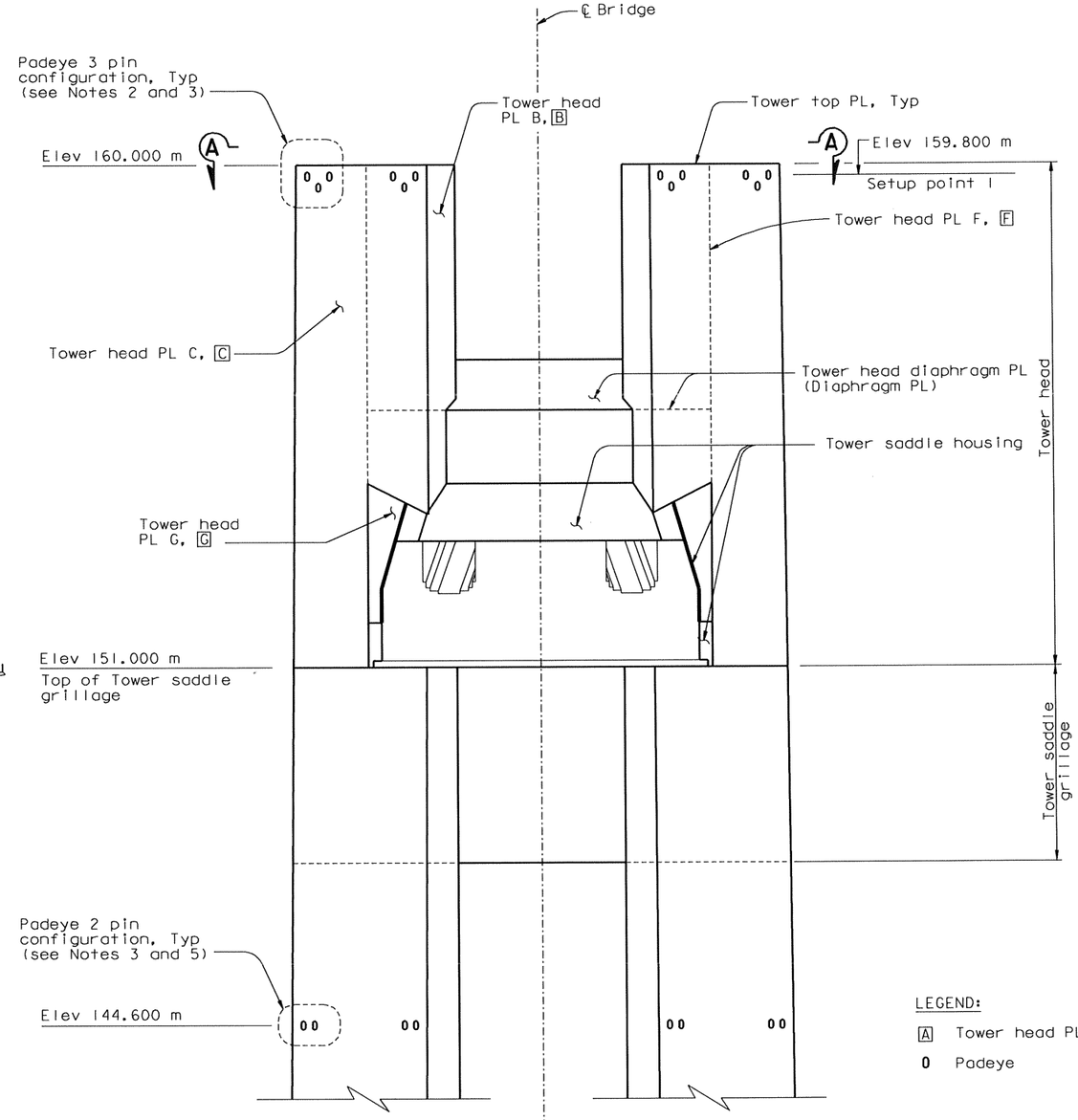


## DETAIL A
1:50

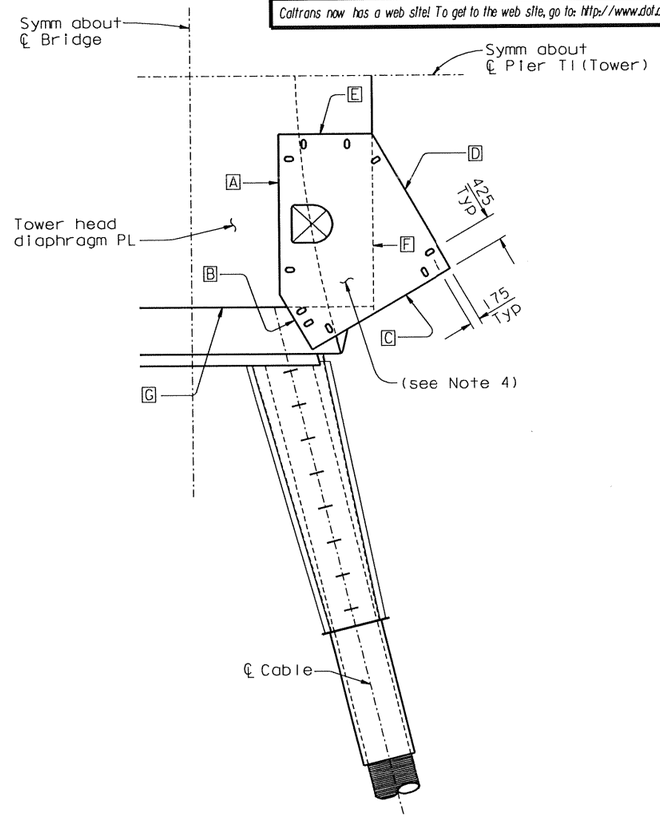


## PLAN A-A
1:50
Padeye Layout at Tower Top Plate (see Note 1)

LEGEND:

A Tower head PL designation

0 Padeye

NOTES:

1. Padeye locations shall be shifted to avoid conflict with tower fog light, boom assembly, outrigger and submitted for approval by the Engineer.
2. Padeye 3 pin configuration shall be located at tower head plate A, B, C, D and E.
3. For padeye pin configuration details, see "Tower Access Details No.22" sheet.
4. For other tower head padeyes, see "Tower Access Details No.13" sheet.
5. For padeye layouts on tower shafts, see "Tower Access Details No.17" sheet.
6. For padeye typical detail and design force, see "Girder Access Details No.10" sheet.

## PADEYE LAYOUT AT TOWER HEAD
(For clarity only the pad eyes on tower head PL C are shown)

ALL DIMENSIONS ARE IN MILLIMETERS UNLESS OTHERWISE SHOWN

| MARK | DATE | DESCRIPTIONS | BY | CH'D | CCO# |
|---|---|---|---|---|---|
| 1 | 06/22/07 | WELDED PADEYES | NV | MN | 41 |
| REVISIONS | | | | | |

CONTRACT CHANGE ORDER NO. 41
SHEET 9 OF 17

| DIST. | COUNTY | ROUTE | KILOMETER POST TOTAL PROJECT | SHEET NO. | TOTAL SHEETS |
|---|---|---|---|---|---|
| 04 | SF | 80 | 13.2/13.9 | 934R1 | 1204 |

REGISTERED ENGINEER - CIVIL
12-6-04
PLANS APPROVAL DATE

REGISTERED PROFESSIONAL ENGINEER — Marwan N. Nader — No. C 054426 — Exp. 12/31/07 — CIVIL — STATE OF CALIFORNIA

The State of California or its officers or agents shall not be responsible for the accuracy or completeness of electronic copies of this plan sheet.

T.Y. LIN / MOFFATT & NICHOL
825 BATTERY STREET
SAN FRANCISCO, CA 94111

Caltrans now has a web site! To get to the web site, go to: http://www.dot.ca.gov

R. Valizadeh/V. Toan/Y.L./W.L./F.C.
DESIGN OVERSIGHT
Ryan Valizadeh / Vong Toan / Y. Liu
SIGN OFF DATE 06/22/07

| | BY | | CHECKED |
|---|---|---|---|
| DESIGN | M. Nader | | N. Vo |
| DETAILS | L. Rus | | D. Harrison |
| QUANTITIES | L. Rus | | D. Harrison |

PREPARED FOR THE STATE OF CALIFORNIA
DEPARTMENT OF TRANSPORTATION

R. Manzanarez
PROJECT ENGINEER

BRIDGE NO. 34-0006L/R
KILOMETER POST 13.2/13.9

CU 04
EA 0120F1

SAN FRANCISCO OAKLAND BAY BRIDGE
EAST SPAN SEISMIC SAFETY PROJECT
SELF-ANCHORED SUSPENSION BRIDGE
(SUPERSTRUCTURE & TOWER)

# TOWER ACCESS DETAILS NO. 18

DISREGARD PRINTS BEARING EARLIER REVISION DATES →
REVISION DATES (PRELIMINARY STAGE ONLY): 04/08/02 07/01/02 12/19/02

SHEET 517R1 OF

Rev. Date: 5-18-98

ORIGINAL SCALE IN MILLIMETERS FOR REDUCED PLANS 0 10 20 30 40 50 60 70 80 90 100

FILE => L:\BB\04-012001\SAS\Contract Plans and CCO\CCO\In Progress\CCO#41\DGN\akacc18.dgn

100% PS&E
USERNAME => vigonatov DATE PLOTTED => 03 JUL 2007 TIME PLOTTED => 10:56:34

| MARK | DATE | DESCRIPTIONS | BY | CH'D | CCO# |
|---|---|---|---|---|---|
| 1 | 06/22/07 | WELDED PADEYES | NV | MN | 41 |
| | | REVISIONS | | | |

CONTRACT CHANGE ORDER NO. 41
SHEET 10 OF 17

Caltrans Metric

| DIST. | COUNTY | ROUTE | KILOMETER POST TOTAL PROJECT | SHEET NO. | TOTAL SHEETS |
|---|---|---|---|---|---|
| 04 | SF | 80 | 13.2/13.9 | 935R1 | 1204 |

REGISTERED ENGINEER - CIVIL
12-6-04
PLANS APPROVAL DATE

REGISTERED PROFESSIONAL ENGINEER — Marwan N. Nader — No. C 054426 — Exp. 12/31/07 — CIVIL — STATE OF CALIFORNIA

The State of California or its officers or agents shall not be responsible for the accuracy or completeness of electronic copies of this plan sheet.

T.Y. LIN / MOFFATT & NICHOL
825 BATTERY STREET
SAN FRANCISCO, CA 94111

Caltrans now has a web site! To get to the web site, go to: http://www.dot.ca.gov

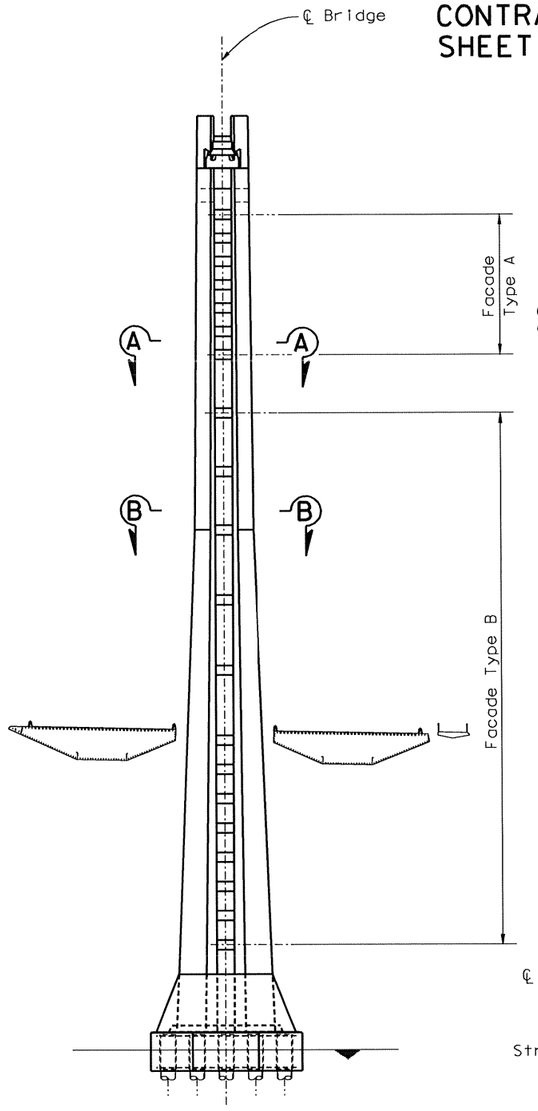


KEY ELEVATION
1:500

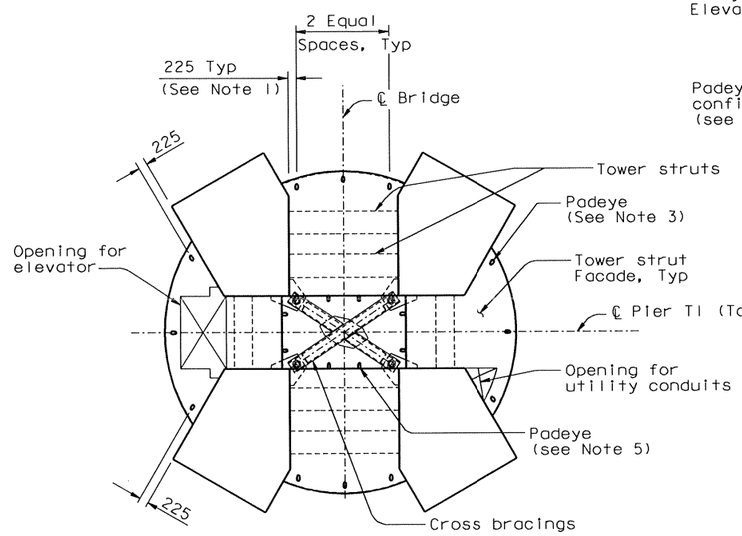


SECTION A-A
1:80
Strut Facade Type A

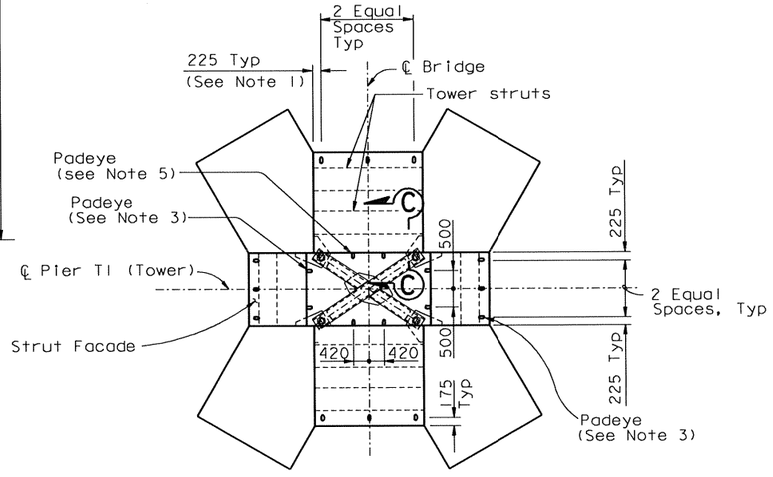


SECTION B-B
1:80
Strut Facade Type B

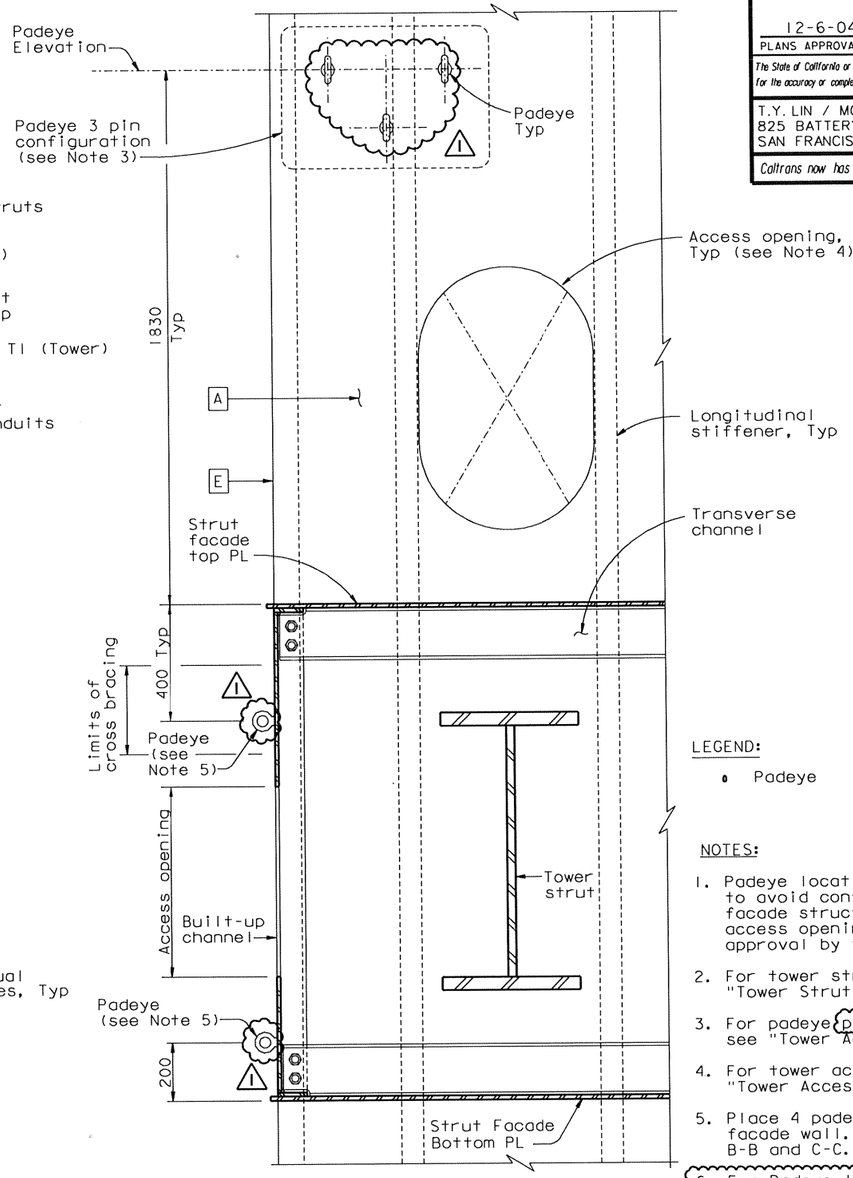


SECTION C-C
1:10
Tower cross bracings not shown for clarity

LEGEND:

- Padeye

NOTES:

1. Padeye locations shall be shifted to avoid conflict with tower strut facade structural components and access openings and submitted for approval by the Engineer.
2. For tower strut facade details, see "Tower Strut Facade Details" sheets.
3. For padeye pin configuration details, see "Tower Access Details No. 22" sheet.
4. For tower access opening details, see "Tower Access Details No. 4" sheet.
5. Place 4 padeyes on each inbound strut facade wall. For locations see sections B-B and C-C.
6. For Padeye typical details and design force, see "Girder Access Details No. 10" sheet.

PADEYE LAYOUT AT TOWER STRUT FACADES

ALL DIMENSIONS ARE IN MILLIMETERS UNLESS OTHERWISE SHOWN

100 % PS&E

DATE PLOTTED => 29 JUN 2007 TIME PLOTTED => 10:07:54
USERNAME => ptom

R. Valizadeh/V. Toan/Y.L./W.L./F.C.
DESIGN OVERSIGHT
Roya Valizadeh / Vong P. Toan / Y. Liu
SIGN OFF DATE 06/22/07

| | | | |
|---|---|---|---|
| DESIGN | BY M. Nader | CHECKED N. Vo | |
| DETAILS | BY L. Rus | CHECKED D. Harrison | |
| QUANTITIES | BY L. Rus | CHECKED D. Harrison | |

PREPARED FOR THE STATE OF CALIFORNIA
DEPARTMENT OF TRANSPORTATION

R. Manzanarez
PROJECT ENGINEER

BRIDGE NO. 34-0006L/R
KILOMETER POST 13.2/13.9

CU 04
EA 0120F1

SAN FRANCISCO OAKLAND BAY BRIDGE
EAST SPAN SEISMIC SAFETY PROJECT
SELF-ANCHORED SUSPENSION BRIDGE
(SUPERSTRUCTURE & TOWER)

TOWER ACCESS DETAILS NO. 19

DISREGARD PRINTS BEARING EARLIER REVISION DATES

REVISION DATES (PRELIMINARY STAGE ONLY): 04/08/02 07/09/02 12/19/02

SHEET 518R1 OF

Rev. Date: 5-18-98

ORIGINAL SCALE IN MILLIMETERS FOR REDUCED PLANS 0 10 20 30 40 50 60 70 80 90 100

FILE => I:\bb\04-012001\sas\contract plans and cco\cco#41\dgn\akacc19.dgn

Caltrans now has a web site! To get to the web site, go to: http://www.dot.ca.gov

| DIST. | COUNTY | ROUTE | KILOMETER POST TOTAL PROJECT | SHEET NO. | TOTAL SHEETS |
|---|---|---|---|---|---|
| 04 | SF | 80 | 13.2/13.9 | 936R1 | 1204 |

Caltrans Metric

REGISTERED ENGINEER - CIVIL

12-6-04
PLANS APPROVAL DATE

REGISTERED PROFESSIONAL ENGINEER Marwan N.Nader No. C 054426 Exp. 12/31/07 CIVIL STATE OF CALIFORNIA

The State of California or its officers or agents shall not be responsible for the accuracy or completeness of electronic copies of this plan sheet.

T.Y. LIN / MOFFATT & NICHOL
825 BATTERY STREET
SAN FRANCISCO, CA 94111

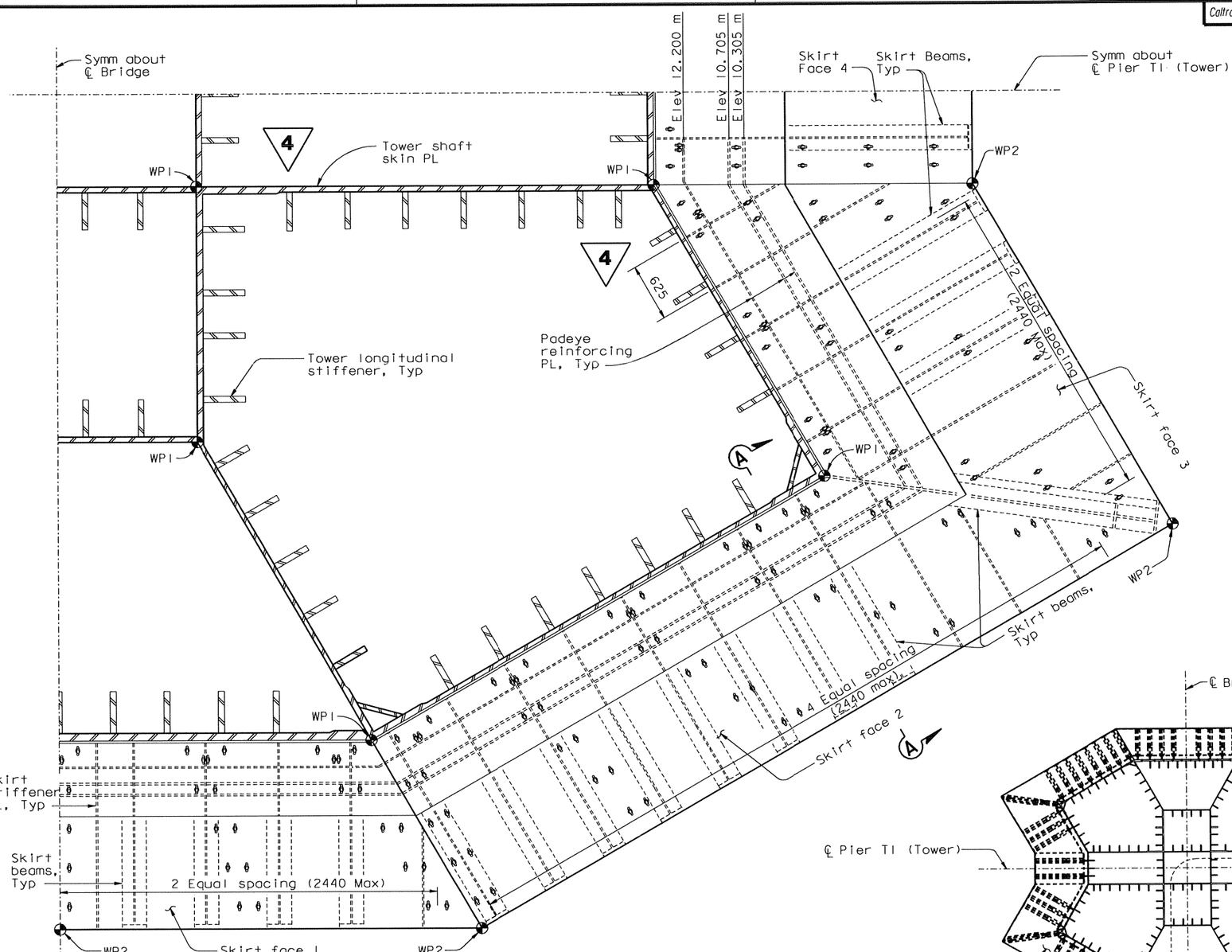


DETAIL A
1:25

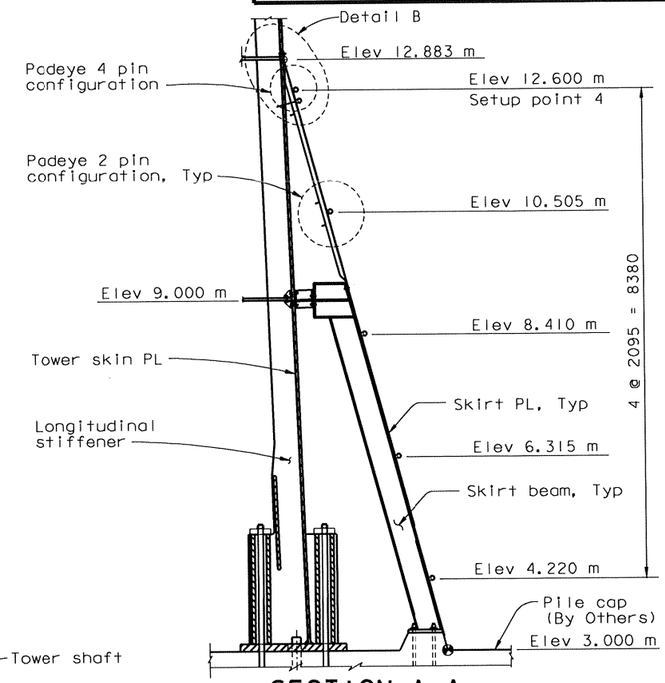


SECTION A-A
1:50
(Padeye NTS and they are shown for clarity)

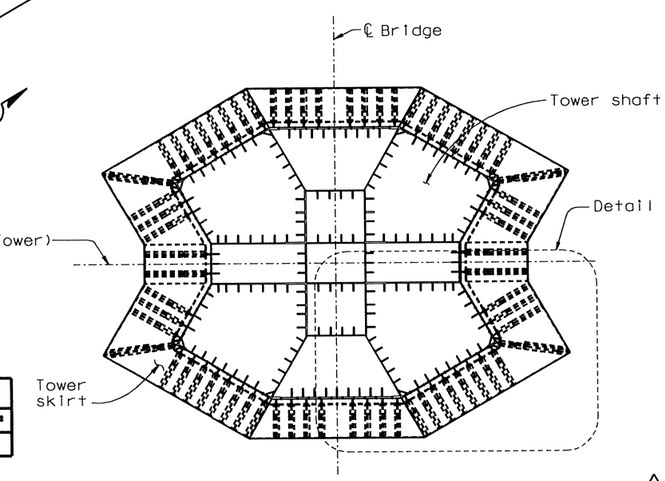


PLAN VIEW @ Elev 13.000 m
1:150

LEGEND:

1 Padeye
WP1 Tower shaft working point
WP2 Tower skirt working point

NOTES:

1. For Detail B, see "Tower Access Details No.21" sheet.
2. For details not shown, see "Tower Skirt Details" sheets.
3. For Padeye typical detail and design force, see "Girder Access Details No.10" sheet.
4. For Padeye pin configuration details, see "Tower Access Details No.22" sheet.

| MARK | DATE | DESCRIPTIONS | BY | CH'D | CCO# |
|---|---|---|---|---|---|
| 1 | 06/22/07 | WELDED PADEYES | NV | MN | 41 |

REVISIONS

CONTRACT CHANGE ORDER NO. 41
SHEET 11 OF 17

4 REVISED PER ADDENDUM NO. 4 DATED DECEMBER 9, 2005

PADEYE LAYOUT AT TOWER SKIRT

ALL DIMENSIONS ARE IN MILLIMETERS UNLESS OTHERWISE SHOWN

SAN FRANCISCO OAKLAND BAY BRIDGE
EAST SPAN SEISMIC SAFETY PROJECT
SELF-ANCHORED SUSPENSION BRIDGE
(SUPERSTRUCTURE & TOWER)

TOWER ACCESS DETAILS NO. 20

R. Valizadeh/V. Toan/Y.L./W.L./F.C.
DESIGN OVERSIGHT
Roger Valizadeh / Vong P. Toan / Y. Liu
SIGN OFF DATE 06/22/07

| | BY | CHECKED |
|---|---|---|
| DESIGN | M. Nader | N. Vo |
| DETAILS | L. Rus | D. Harrison |
| QUANTITIES | L. Rus | D. Harrison |

PREPARED FOR THE STATE OF CALIFORNIA DEPARTMENT OF TRANSPORTATION

R. Manzanarez
PROJECT ENGINEER

BRIDGE NO. 34-0006L/R
KILOMETER POST 13.2/13.9

Rev. Date: 5-18-98

ORIGINAL SCALE IN MILLIMETERS FOR REDUCED PLANS 0 10 20 30 40 50 60 70 80 90 100

CU 04
EA 0120F1

DISREGARD PRINTS BEARING EARLIER REVISION DATES

REVISION DATES (PRELIMINARY STAGE ONLY) 04/08/02 07/01/02 12/19/02 07/18/03 11/13/05

SHEET 519R1 OF

FILE => I:\bb\04-012001\sas\contract plans and cco\cco\in progress\cco#41\dgn\akacc20.dgn

100 % PS&E

DATE PLOTTED => 29 JUN 2007 TIME PLOTTED => 10:09:34

USERNAME => ptom

| DIST. | COUNTY | ROUTE | KILOMETER POST TOTAL PROJECT | SHEET NO. | TOTAL SHEETS |
|---|---|---|---|---|---|
| 04 | SF | 80 | 13.2/13.9 | 937RI | 1204 |

REGISTERED ENGINEER - CIVIL

12-6-04
PLANS APPROVAL DATE

REGISTERED PROFESSIONAL ENGINEER — Marwan N. Nader — No. C 054426 — Exp. 12/31/07 — CIVIL — STATE OF CALIFORNIA

The State of California or its officers or agents shall not be responsible for the accuracy or completeness of electronic copies of this plan sheet.

T.Y. LIN / MOFFATT & NICHOL
825 BATTERY STREET
SAN FRANCISCO, CA 94111

Caltrans now has a web site! To get to the web site, go to: http://www.dot.ca.gov

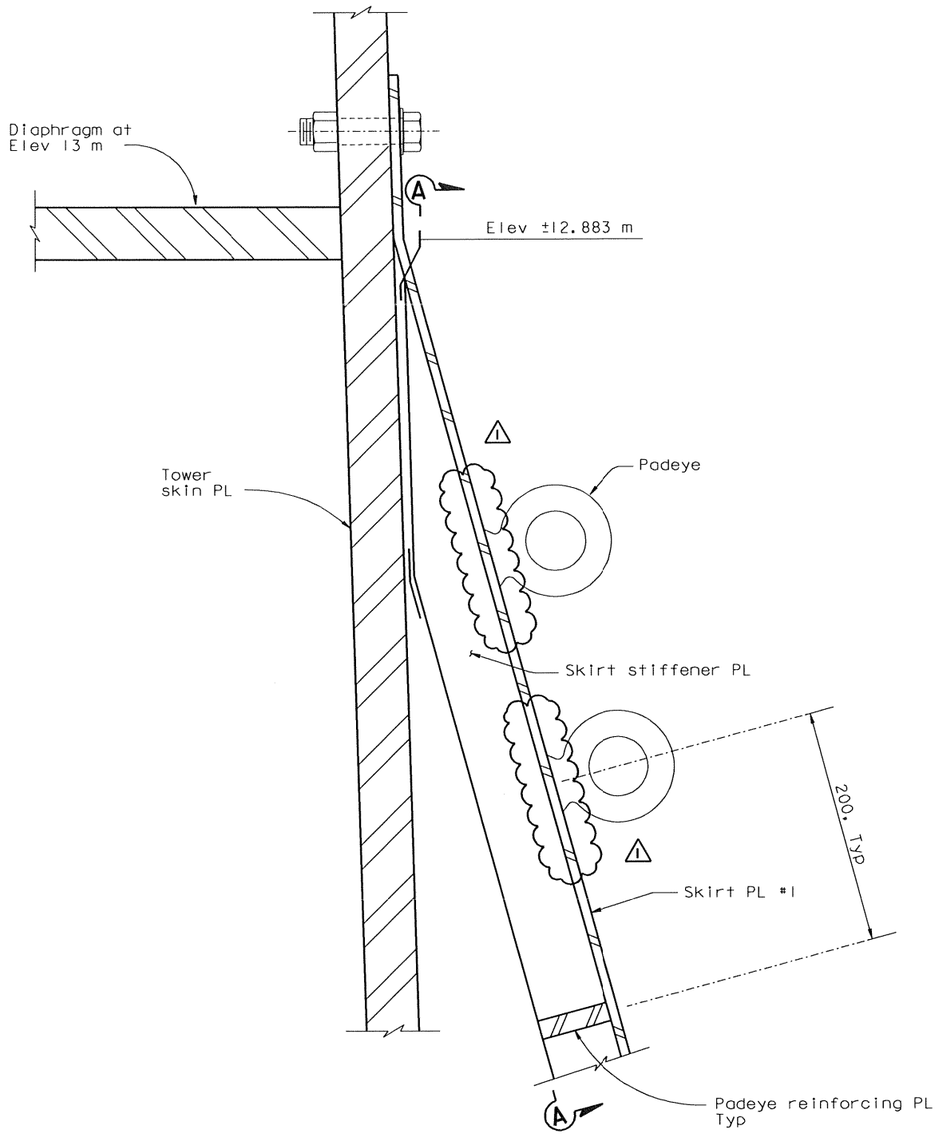


DETAIL B
1:2.5

(Longitudinal stiffener not shown for clarity)

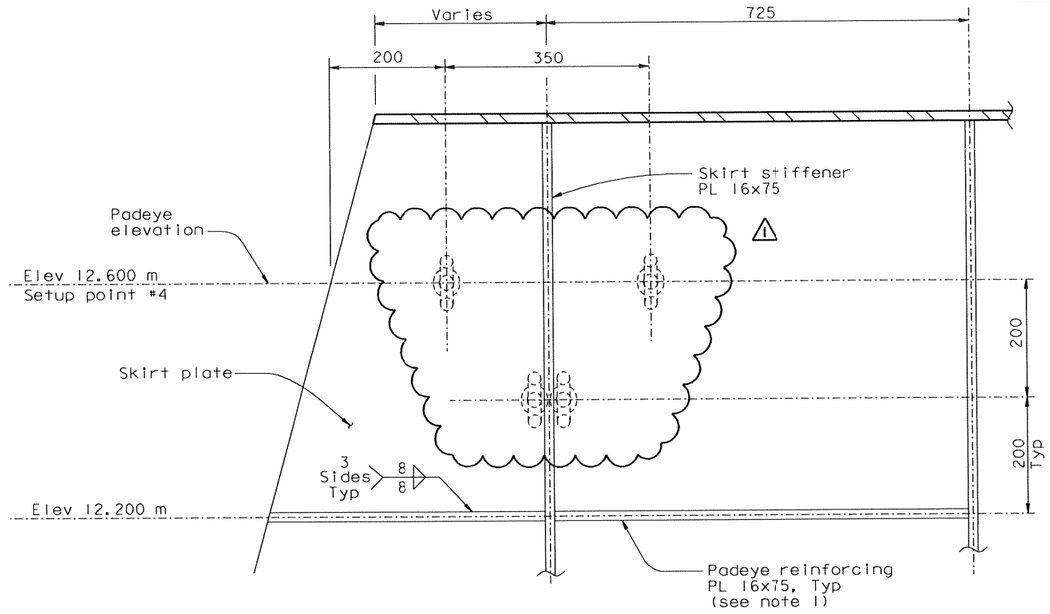


SECTION A-A
1:5

(Diaphragm at Elev 13 m and tower shaft skin PL not shown for clarity)

| MARK | DATE | DESCRIPTIONS | BY | CH'D | CCO# |
|---|---|---|---|---|---|
| | | REVISIONS | | | |
| 1 | 06/22/07 | WELDED PADEYES | NV | MN | 41 |

CONTRACT CHANGE ORDER NO. 41
SHEET 12 OF 17

Notes:

1. For location of padeye reinforcing plates, see "Tower Access Details No.20" sheet.

100 % PS&E

USERNAME => vignatovs\DATE PLOTTED => 03 JUL 2007 TIME PLOTTED => 09:16:00

ALL DIMENSIONS ARE IN MILLIMETERS UNLESS OTHERWISE SHOWN

R. Vallzadeh/V. Toan/Y.L./W.L./F.C.
DESIGN OVERSIGHT
SIGN OFF DATE 06/22/07

| | | | |
|---|---|---|---|
| DESIGN | BY M. Nader | CHECKED | N. Vo |
| DETAILS | BY S. Hamoud | CHECKED | D. Harrison |
| QUANTITIES | BY S. Hamoud | CHECKED | D. Harrison |

PREPARED FOR THE STATE OF CALIFORNIA DEPARTMENT OF TRANSPORTATION

R. Manzanarez
PROJECT ENGINEER

BRIDGE NO. 34-0006L/R
KILOMETER POST 13.2/13.9

CU 04
EA 0120F1

DISREGARD PRINTS BEARING EARLIER REVISION DATES →

REVISION DATES (PRELIMINARY STAGE ONLY): 04/26/02 | 07/01/02 | 12/19/02

SHEET 520RI OF

ORIGINAL SCALE IN MILLIMETERS FOR REDUCED PLANS 0 10 20 30 40 50 60 70 80 90 100

FILE => L:\BB\04-0120O1\SAS\Contract Plans and CCO\CCO\In Progress\CCO#41\DGN\akacc21.dgn

Rev. Date: 5-18-98

SAN FRANCISCO OAKLAND BAY BRIDGE
EAST SPAN SEISMIC SAFETY PROJECT
SELF-ANCHORED SUSPENSION BRIDGE
(SUPERSTRUCTURE & TOWER)

# TOWER ACCESS DETAILS NO. 21

| DIST. | COUNTY | ROUTE | KILOMETER POST TOTAL PROJECT | SHEET NO. | TOTAL SHEETS |
|---|---|---|---|---|---|
| 04 | SF | 80 | 13.2/13.9 | 938R1 | 1204 |

Caltrans Metric

REGISTERED ENGINEER - CIVIL

12-6-04
PLANS APPROVAL DATE

REGISTERED PROFESSIONAL ENGINEER
Marwan N. Nader
No. C 054426
Exp. 12/31/07
CIVIL
STATE OF CALIFORNIA

The State of California or its officers or agents shall not be responsible for the accuracy or completeness of electronic copies of this plan sheet.

T.Y. LIN / MOFFATT & NICHOL
825 BATTERY STREET
SAN FRANCISCO, CA 94111

Caltrans now has a web site! To get to the web site, go to: http://www.dot.ca.gov

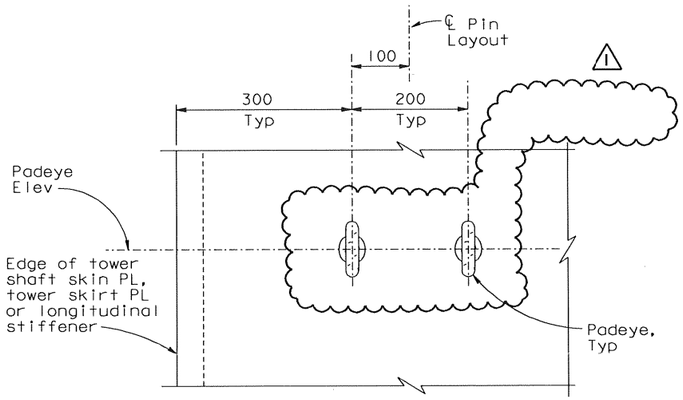


## 2 PIN CONFIGURATION
1:5

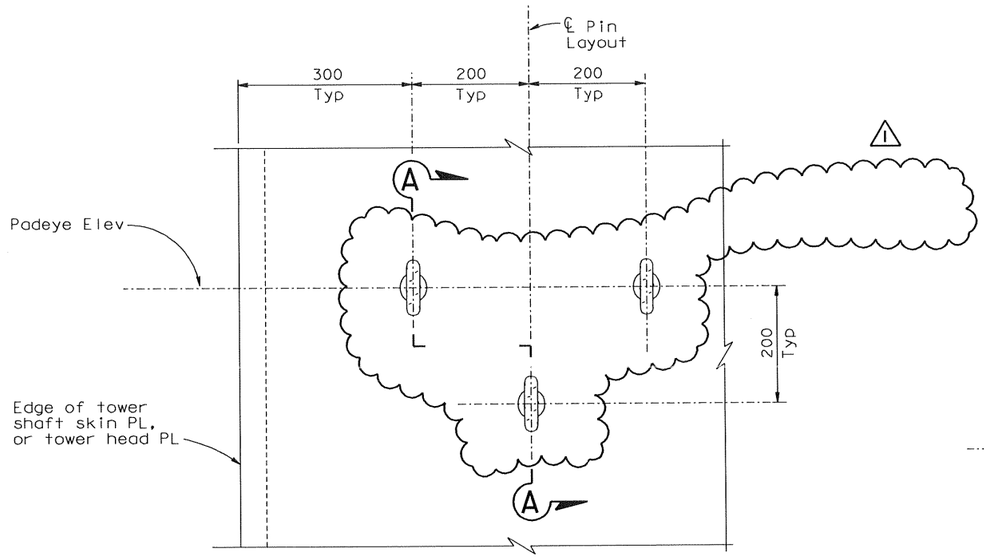


## 3 PIN CONFIGURATION
1:5

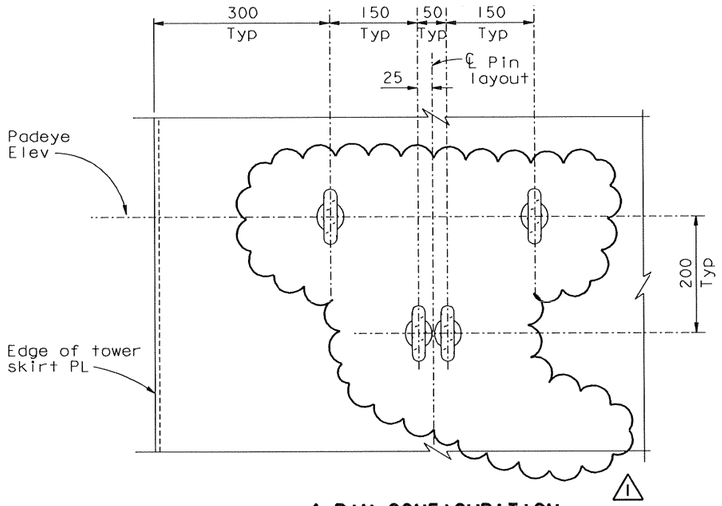


## 4 PIN CONFIGURATION
1:5

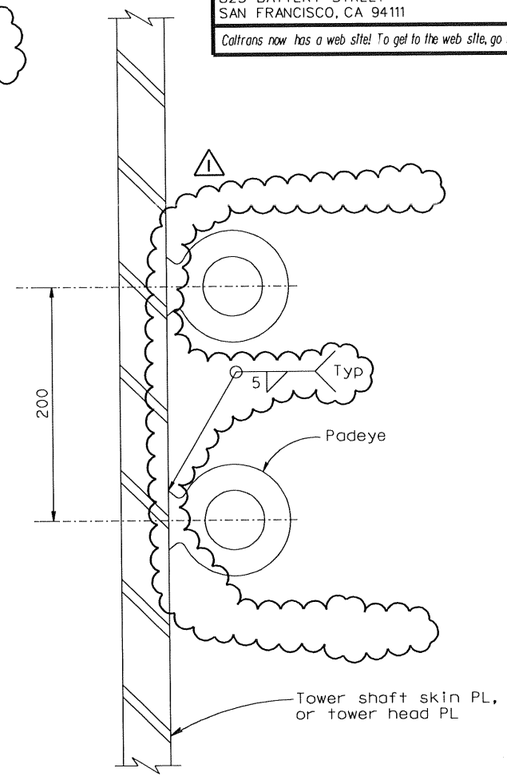


## SECTION A-A
1:2.5

NOTES:

1. For Padeye typical details and design force, see "Girder Access Details No. 10" sheet.

| MARK | DATE | DESCRIPTIONS | BY | CH'D | CCO# |
|---|---|---|---|---|---|
| 1 | 06/22/07 | WELDED PADEYES | NV | MN | 41 |

REVISIONS

CONTRACT CHANGE ORDER NO. 41
SHEET 13 OF 17

PADEYE CONFIGURATION

ALL DIMENSIONS ARE IN MILLIMETERS UNLESS OTHERWISE SHOWN

SAN FRANCISCO OAKLAND BAY BRIDGE
EAST SPAN SEISMIC SAFETY PROJECT
SELF-ANCHORED SUSPENSION BRIDGE
(SUPERSTRUCTURE & TOWER)

# TOWER ACCESS DETAILS NO. 22

R. Valizadeh/V. Toan/Y.L./W.L./F.C.
DESIGN OVERSIGHT
Roger Valizadeh / Vong Toan / Y. Lin
SIGN OFF DATE 06/22/07

| | BY | CHECKED |
|---|---|---|
| DESIGN | M. Nader | N. Vo |
| DETAILS | L. Rus | D. Harrison |
| QUANTITIES | L. Rus | D. Harrison |

PREPARED FOR THE STATE OF CALIFORNIA DEPARTMENT OF TRANSPORTATION

R. Manzanarez
PROJECT ENGINEER

BRIDGE NO. 34-0006L/R
KILOMETER POST 13.2/13.9

Rev. Date: 5-18-98

ORIGINAL SCALE IN MILLIMETERS FOR REDUCED PLANS 0 10 20 30 40 50 60 70 80 90 100

CU 04
EA 0120F1

DISREGARD PRINTS BEARING EARLIER REVISION DATES

REVISION DATES (PRELIMINARY STAGE ONLY) 05/31/01 04/08/02 07/01/02 12/19/02

SHEET 521R1 OF

FILE => I:\bb\04-012001\sas\contract plans and cco\cco\in progress\cco#41\dgn\akacc22.dgn

100 % PS&E

USERNAME => ptom DATE PLOTTED => 29 JUN 2007 TIME PLOTTED => 10:12:48

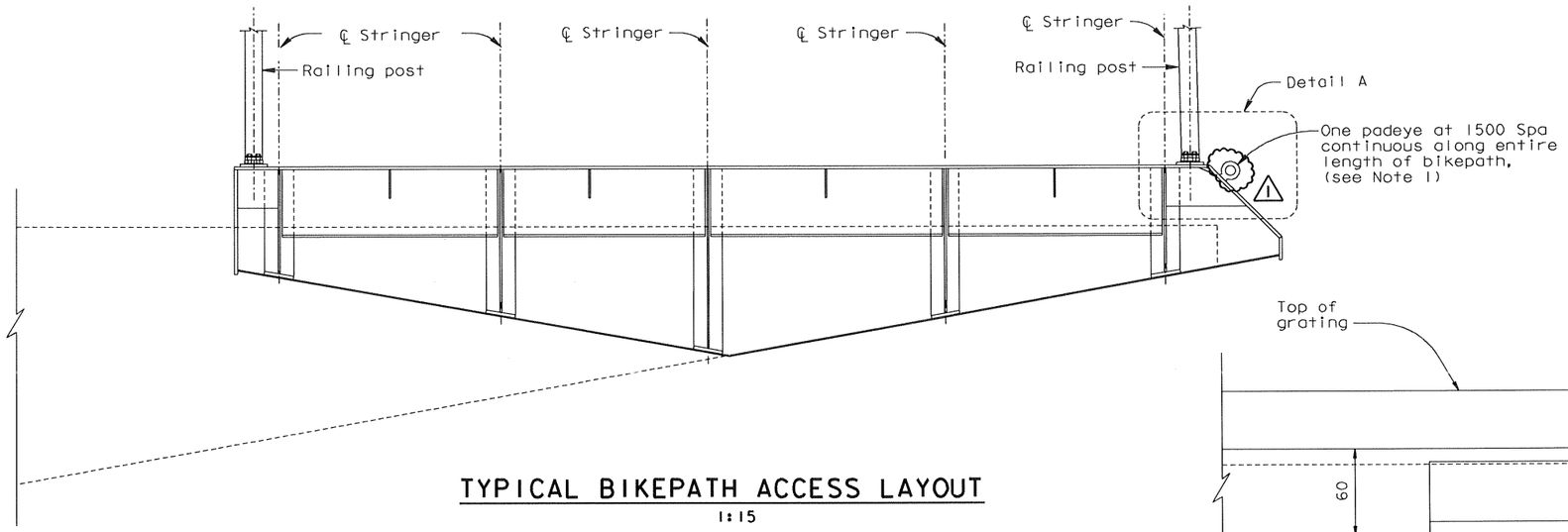


## TYPICAL BIKEPATH ACCESS LAYOUT

1:15

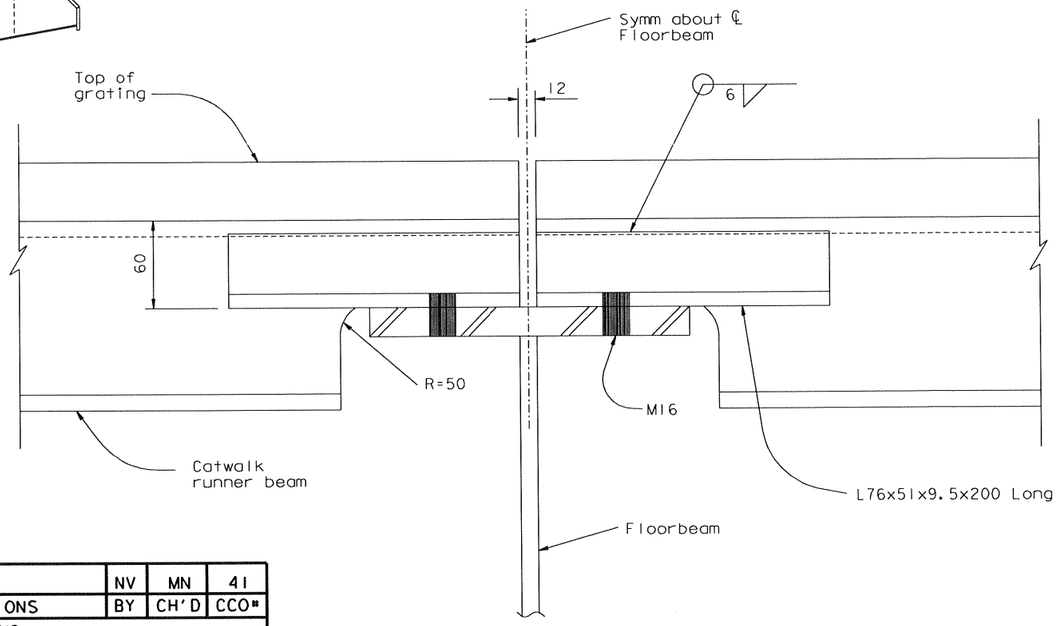


## DETAIL B

1:2.5

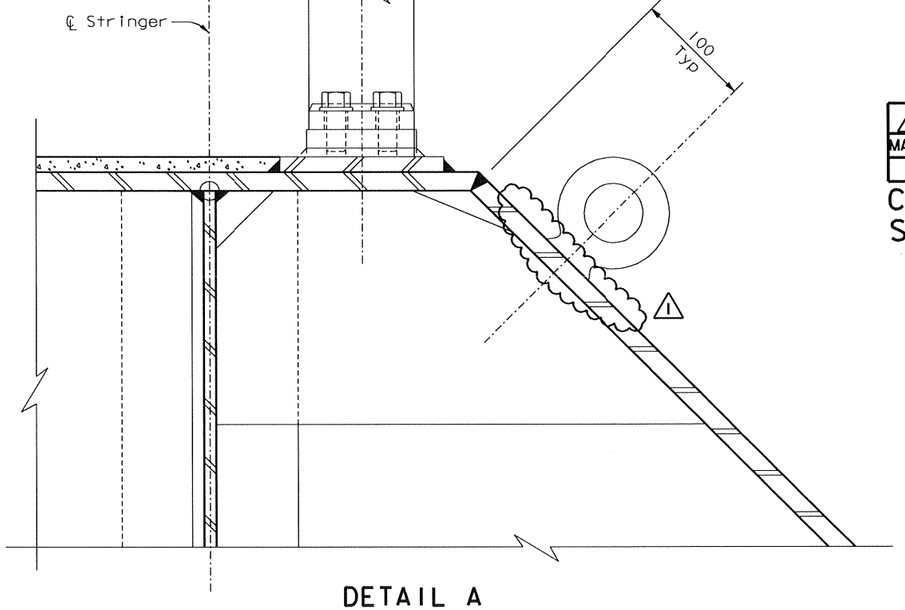


## DETAIL A

1:2.5

| MARK | DATE | DESCRIPTIONS | BY | CH'D | CCO# |
|---|---|---|---|---|---|
| | | REVISIONS | | | |
| 1 | 06/22/07 | WELDED PADEYES | NV | MN | 41 |

CONTRACT CHANGE ORDER NO. 41
SHEET 14 OF 17

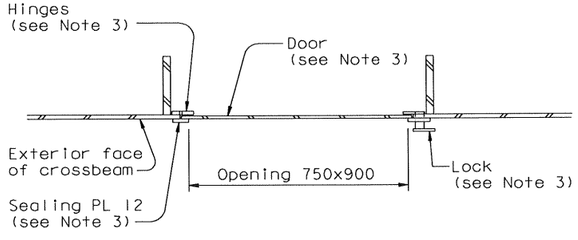


## SECTION D-D

1:10

NOTES:

1. For bikepath padeye detail, see "Girder Access Details No. 10 sheet.
2. For bikepath details, see "Bikepath Details" sheets.
3. For details not shown, see "Access Opening With Door At Vertical Face Of Tower Strut Facade" and "Access Opening Door Detail" on "Tower Access Details No. 4" sheet.

| DIST. | COUNTY | ROUTE | KILOMETER POST TOTAL PROJECT | SHEET NO. | TOTAL SHEETS |
|---|---|---|---|---|---|
| 04 | SF | 80 | 13.2/13.9 | 948R1 | 1204 |

Caltrans Metric

REGISTERED ENGINEER - CIVIL
Marwan N. Nader No. C 054426 Exp. 12/31/07 CIVIL — REGISTERED PROFESSIONAL ENGINEER — STATE OF CALIFORNIA
12-6-04
PLANS APPROVAL DATE

The State of California or its officers or agents shall not be responsible for the accuracy or completeness of electronic copies of this plan sheet.

T.Y. LIN / MOFFATT & NICHOL
825 BATTERY STREET
SAN FRANCISCO, CA 94111

Caltrans now has a web site! To get to the web site, go to: http://www.dot.ca.gov

ALL DIMENSIONS ARE IN MILLIMETERS UNLESS OTHERWISE SHOWN

| | | | |
|---|---|---|---|
| DESIGN | BY M. Nader | CHECKED N. Vo | |
| DETAILS | BY M. Roberts | CHECKED N. Vo | |
| QUANTITIES | BY M. Roberts | CHECKED N. Vo | |

R. Valizadeh/V. Toan/Y.L./W.L./F.C.
DESIGN OVERSIGHT
SIGN OFF DATE 06/22/07

PREPARED FOR THE STATE OF CALIFORNIA DEPARTMENT OF TRANSPORTATION

R. Manzanarez
PROJECT ENGINEER

BRIDGE NO. 34-0006L/R
KILOMETER POST 13.2/13.9

CU 04
EA 0120F1

SAN FRANCISCO OAKLAND BAY BRIDGE
EAST SPAN SEISMIC SAFETY PROJECT
SELF-ANCHORED SUSPENSION BRIDGE
(SUPERSTRUCTURE & TOWER)

# GIRDER ACCESS DETAILS NO. 8

Rev. Date: 5-18-98

ORIGINAL SCALE IN MILLIMETERS FOR REDUCED PLANS 0 10 20 30 40 50 60 70 80 90 100

DISREGARD PRINTS BEARING EARLIER REVISION DATES →

REVISION DATES (PRELIMINARY STAGE ONLY): 04/08/02 07/01/02 12/19/02

SHEET 531R1 OF

FILE => I:\bb\04-0120I\sas\contract plans and cco\cco\In progress\cco*41\dgn\akacc08d.dgn

100% PS&E
DATE PLOTTED => 29 JUN 2007 TIME PLOTTED => 10:14:03
USERNAME => ptom

| DIST. | COUNTY | ROUTE | KILOMETER POST TOTAL PROJECT | SHEET NO. | TOTAL SHEETS |
|---|---|---|---|---|---|
| 04 | SF | 80 | 13.2/13.9 | 950R1 | 1204 |

Caltrans Metric

REGISTERED ENGINEER - CIVIL

12-6-04
PLANS APPROVAL DATE

REGISTERED PROFESSIONAL ENGINEER — Marwan N. Nader — No. C 054426 — Exp. 12/31/07 — CIVIL — STATE OF CALIFORNIA

The State of California or its officers or agents shall not be responsible for the accuracy or completeness of electronic copies of this plan sheet.

T.Y. LIN / MOFFATT & NICHOL
825 BATTERY STREET
SAN FRANCISCO, CA 94111

To get to the web site, go to: http://www.dot.ca.gov

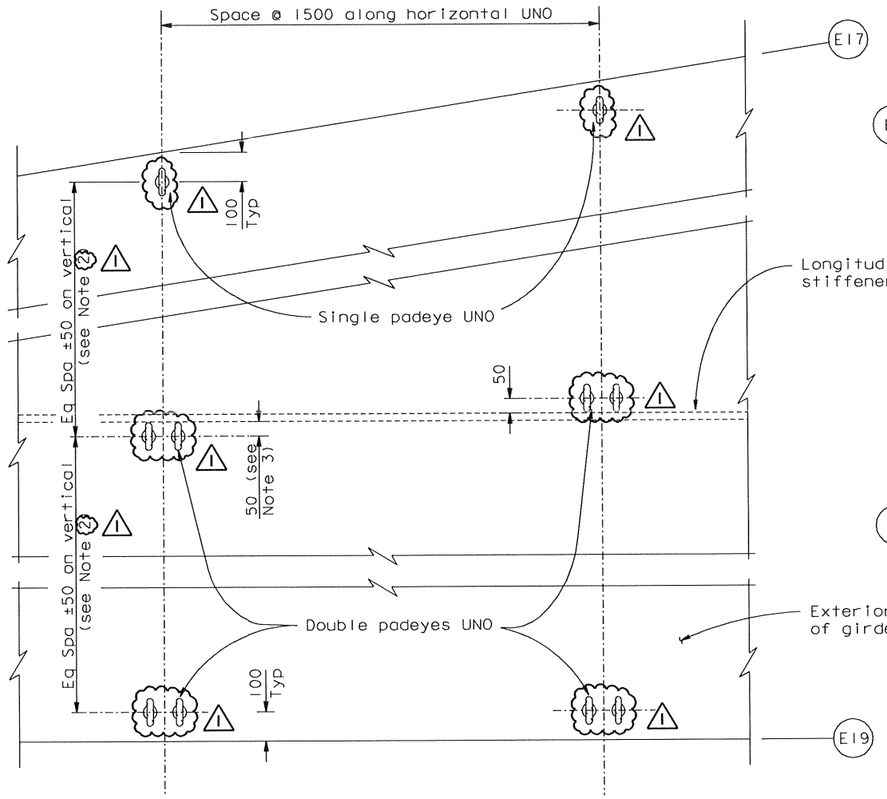


## DETAIL B
1:10
(Only one stiffener shown for clarity)

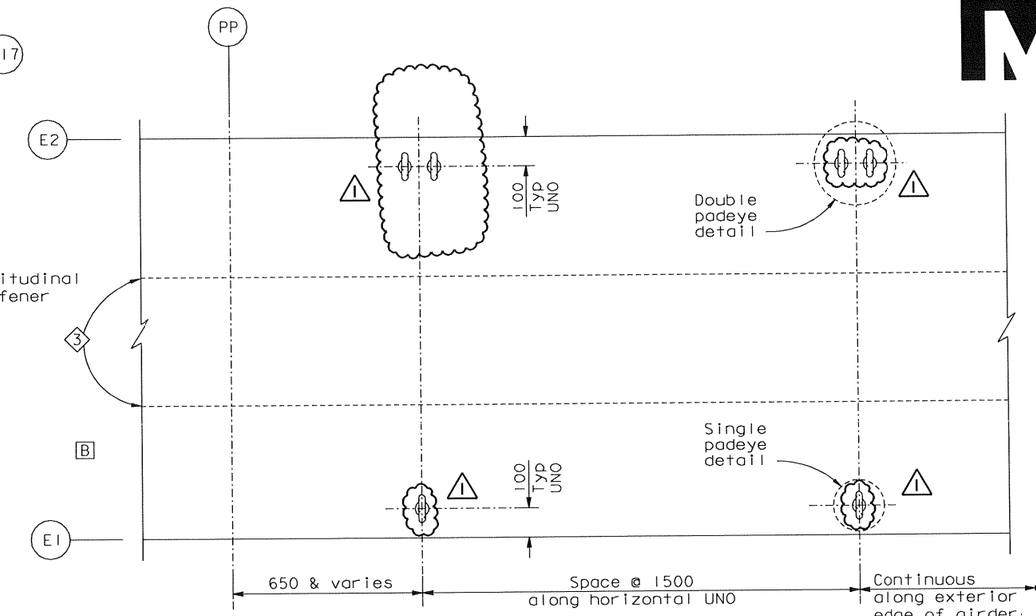


## DETAIL A
1:10

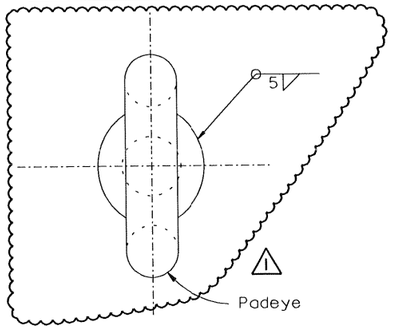


## SINGLE PADEYE DETAIL
1:1.25

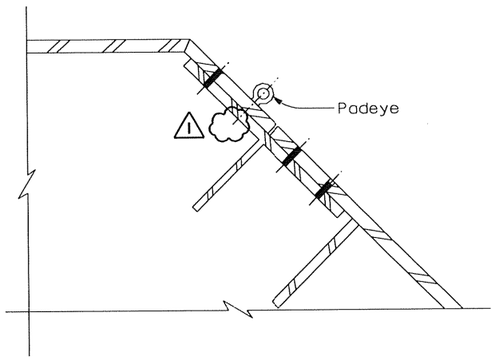


## PADEYE AT ARCHITECTURAL SPLICE DETAIL
1:5

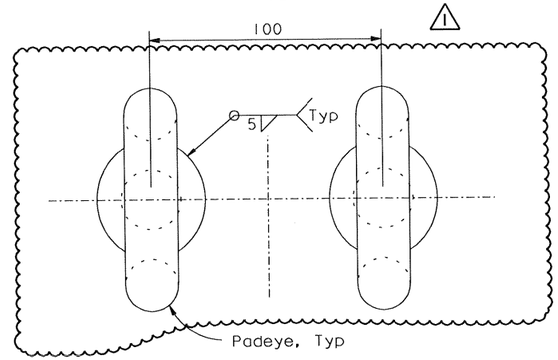


## DOUBLE PADEYE DETAIL
1:1.25

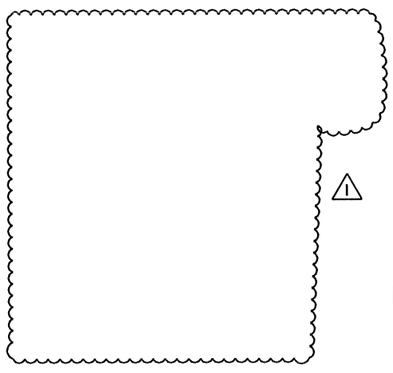

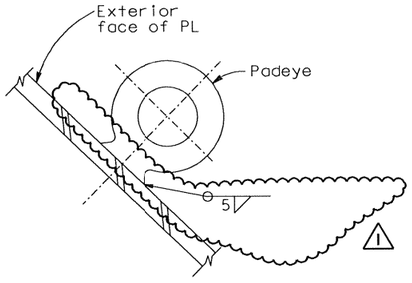


## PADEYE AT BIKEPATH DETAIL
1:2.5
(Counterweight detail similar)
(Typical Welded Padeye) ⚠1

NOTES:
1. Padeyes shall be Crosby size No.4 or equivalent, with a 25 mm diameter center hole.
2. Locate padeye bolt centers to be 50 mm from face of nearest shown longitudinal stiffener.
3. Padeye locations shall be shifted to avoid conflict with structural and drainage components and submitted for approval by the Engineer.
4. The padeye shall remain elastic under a tension and shear force of 22 kN. These forces shall not be considered simultaneous.

| MARK | DATE | REVISIONS DESCRIPTIONS | BY | CH'D | CCO# |
|---|---|---|---|---|---|
| ⚠1 | 06/22/07 | WELDED PADEYES | NV | MN | 41 |

CONTRACT CHANGE ORDER NO. 41
SHEET 15 OF 17

ALL DIMENSIONS ARE IN MILLIMETERS UNLESS OTHERWISE SHOWN

SAN FRANCISCO OAKLAND BAY BRIDGE
EAST SPAN SEISMIC SAFETY PROJECT
SELF-ANCHORED SUSPENSION BRIDGE

# GIRDER ACCESS DETAILS NO. 10

100 % PS&E

R. Vallzadeh/V. Toan/Y.L./W.L./F.C.
DESIGN OVERSIGHT
SIGN OFF DATE 06/22/07

| | BY | CHECKED |
|---|---|---|
| DESIGN | M. Nader | N. Vo |
| DETAILS | M. Roberts | N. Vo |
| QUANTITIES | M. Roberts | N. Vo |

PREPARED FOR THE STATE OF CALIFORNIA
DEPARTMENT OF TRANSPORTATION

R. Manzanarez
PROJECT ENGINEER

BRIDGE NO. 34-0006L/R
KILOMETER POST 13.2/13.9

CU 04
EA 0120F1

DISREGARD PRINTS BEARING EARLIER REVISION DATES →

| REVISION DATES (PRELIMINARY STAGE ONLY) | | | | | | | | | SHEET | OF |
|---|---|---|---|---|---|---|---|---|---|---|
| 04/08/02 | 07/01/02 | 12/19/02 | | | | | | | 533R1 | |

ORIGINAL SCALE IN MILLIMETERS FOR REDUCED PLANS 0 10 20 30 40 50 60 70 80 90 100

Rev. Date: 5-18-98

FILE => I:\bb\04-012001\sas\contract plans and cco\cco\In progress\cco#41\dgn\akacc10b.dgn

USERNAME => dtom
DATE PLOTTED => 29 JUN 2007
TIME PLOTTED => 10:15:36

| DIST. | COUNTY | ROUTE | KILOMETER POST TOTAL PROJECT | SHEET NO. | TOTAL SHEETS |
|---|---|---|---|---|---|
| 04 | SF | 80 | 13.2/13.9 | 954R1 | 1204 |

REGISTERED ENGINEER - CIVIL

12-6-04

PLANS APPROVAL DATE

The State of California or its officers or agents shall not be responsible for the accuracy or completeness of electronic copies of this plan sheet.

REGISTERED PROFESSIONAL ENGINEER — Marwan N. Nader — No. C 54426 — Exp. 12/31/07 — CIVIL — STATE OF CALIFORNIA

T.Y. LIN / MOFFATT & NICHOL
825 BATTERY STREET
SAN FRANCISCO, CA 94111

To get to the web site, go to: http://www.dot.ca.gov

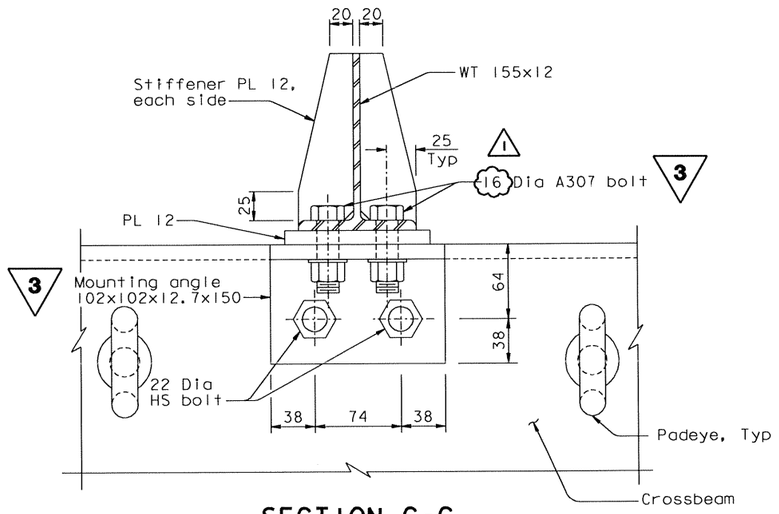


SECTION C-C
1:2.5

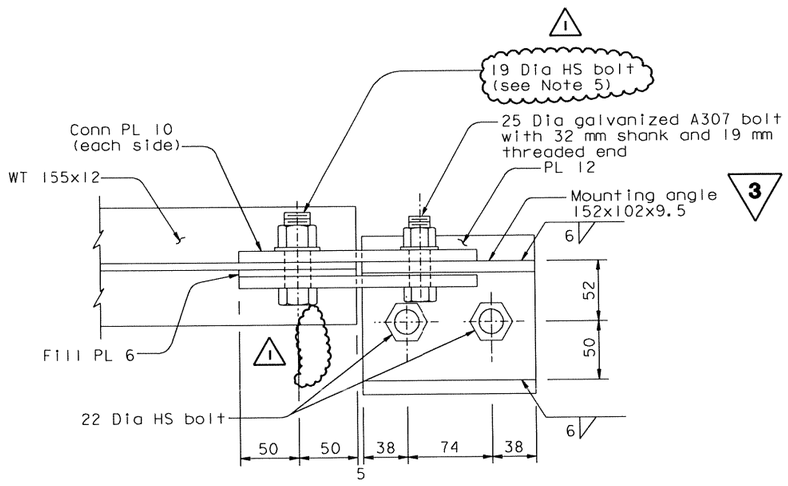


VIEW D-D
1:2.5

NOTES:

1. The bolt sizes shown correspond to US Standard bolt sizes and shall be galvanized.
2. All mounting angles connected by HS Bolts shall be provided at both faces of all crossbeams except above (utility platforms). For locations see "Crossbeam Access Details No.1" and "Crossbeam Access Details No.3" sheets.
3. All A307 bolts shall be wrench tightened for future removal by maintenance personnel.
4. The 36 outriggers shall be installed at crossbeams located at panel points 27, 75, and 111, or as otherwise directed by the Engineer.
5. Bolt threads shall be excluded from the shear plane.
6. For padeye typical detail and design force, see "Girder Access Details No.10" sheet.

| MARK | DATE | DESCRIPTIONS | BY | CH'D | CCO# |
|---|---|---|---|---|---|
| 1 | 06/22/07 | WELDED PADEYES | NV | MN | 41 |
| REVISIONS | | | | | |

CONTRACT CHANGE ORDER NO. 41
SHEET 16 OF 17

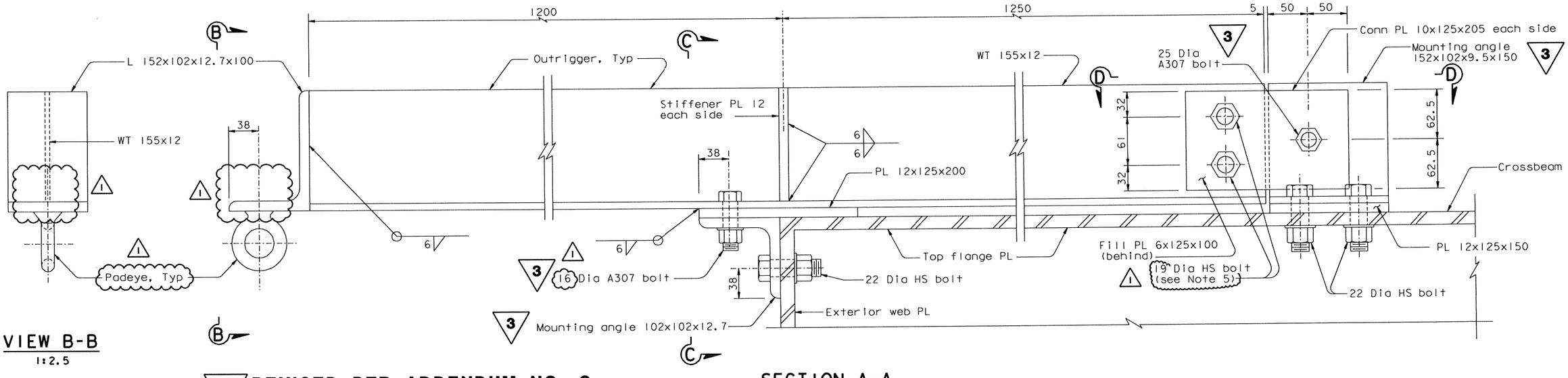


VIEW B-B
1:2.5

SECTION A-A
1:2.5

3 REVISED PER ADDENDUM NO. 3 DATED NOVEMBER 7, 2005

ALL DIMENSIONS ARE IN MILLIMETERS UNLESS OTHERWISE SHOWN

R. Vallzadeh/V. Toan/Y.L./W.L./F.C.
DESIGN OVERSIGHT
SIGN OFF DATE 06/22/07

| | BY | CHECKED |
|---|---|---|
| DESIGN | M. Nader | N. Vo |
| DETAILS | G. Baker | N. Vo |
| QUANTITIES | G. Baker | N. Vo |

PREPARED FOR THE STATE OF CALIFORNIA DEPARTMENT OF TRANSPORTATION

R. Manzanarez
PROJECT ENGINEER

CU 04
EA 0120F1

BRIDGE NO. 34-0006L/R
KILOMETER POST 13.2/13.9

SAN FRANCISCO OAKLAND BAY BRIDGE
EAST SPAN SEISMIC SAFETY PROJECT
SELF-ANCHORED SUSPENSION BRIDGE
(SUPERSTRUCTURE & TOWER)

# CROSSBEAM ACCESS DETAILS NO. 2

Rev. Date: 5-18-98

ORIGINAL SCALE IN MILLIMETERS FOR REDUCED PLANS 0 10 20 30 40 50 60 70 80 90 100

DISREGARD PRINTS BEARING EARLIER REVISION DATES

REVISION DATES (PRELIMINARY STAGE ONLY): 04/28/02 07/29/02 12/17/02 10/13/05

SHEET 537R1 OF

FILE => I:\bb\04-0120I\sas\contract plans and cco\cco\In progress\cco#41\dgn\akcad02.dgn

DATE PLOTTED => 02 JUL 2007 TIME PLOTTED => 10:09:37
USERNAME => ptom
100 % PS&E

Caltrans Metric

| DIST. | COUNTY | ROUTE | KILOMETER POST TOTAL PROJECT | SHEET NO. | TOTAL SHEETS |
|---|---|---|---|---|---|
| 04 | SF | 80 | 13.2/13.9 | 955RI | 1204 |

REGISTERED ENGINEER - CIVIL

12-6-04
PLANS APPROVAL DATE

REGISTERED PROFESSIONAL ENGINEER — Marwan N.Nader — No. C 54426 — Exp. 12/31/07 — CIVIL — STATE OF CALIFORNIA

The State of California or its officers or agents shall not be responsible for the accuracy or completeness of electronic copies of this plan sheet.

T.Y. LIN / MOFFATT & NICHOL
825 BATTERY STREET
SAN FRANCISCO, CA 94111

To get to the web site, go to: http://www.dot.ca.gov

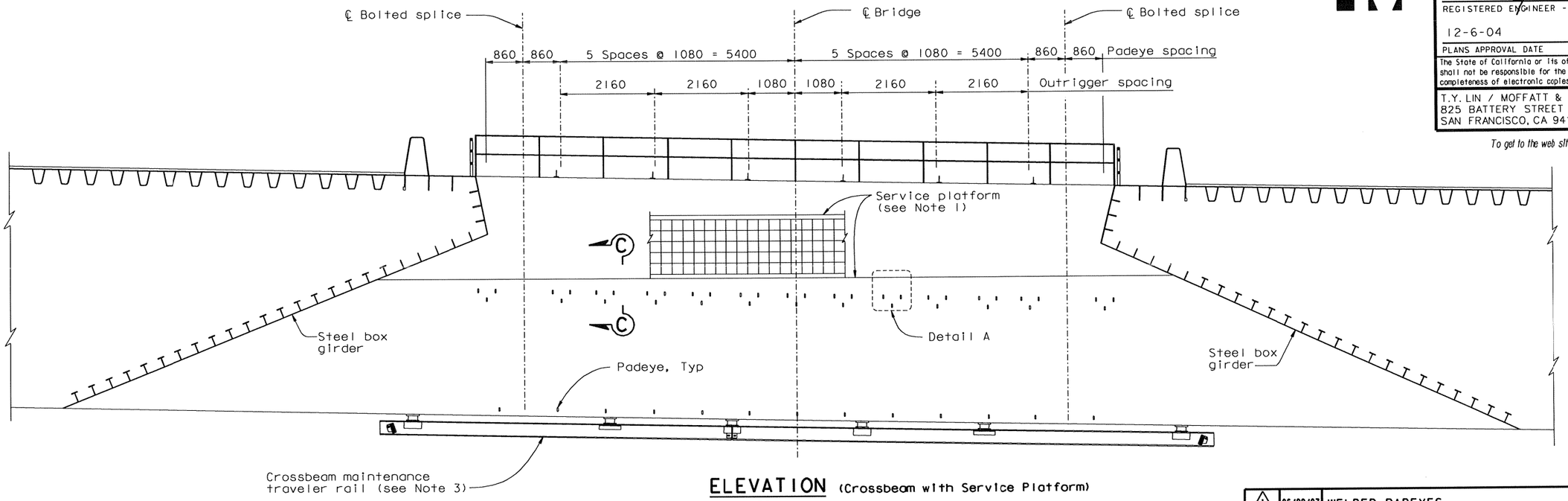


## ELEVATION (Crossbeam with Service Platform)
1:50

| MARK | DATE | DESCRIPTIONS | BY | CH'D | CCO# |
|---|---|---|---|---|---|
| | | REVISIONS | | | |
| 1 | 06/22/07 | WELDED PADEYES | NV | MN | 41 |

CONTRACT CHANGE ORDER NO. 41
SHEET 17 OF 17

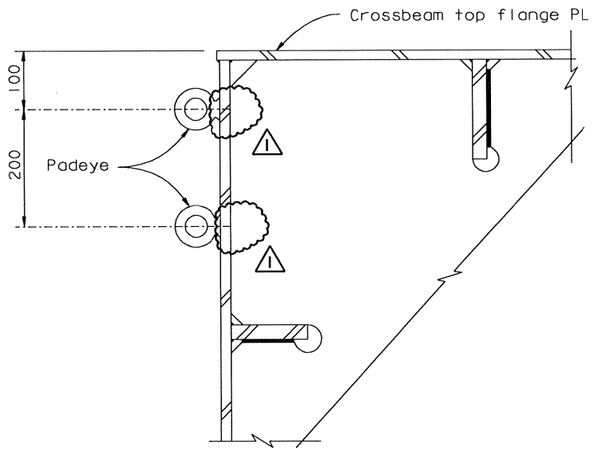


## SECTION B-B
1:5

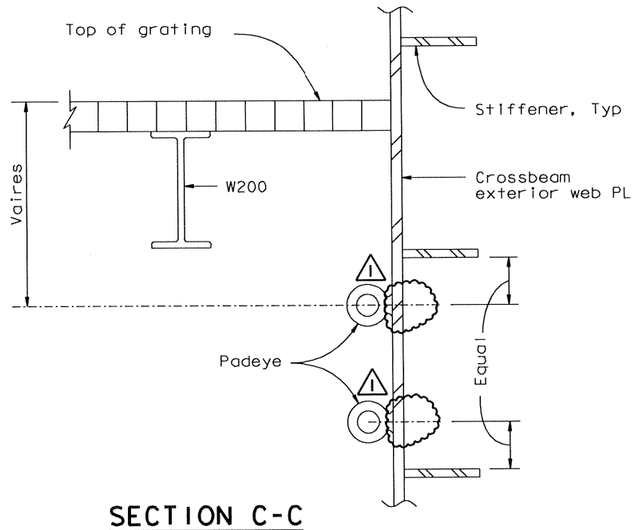


## SECTION C-C
1:5

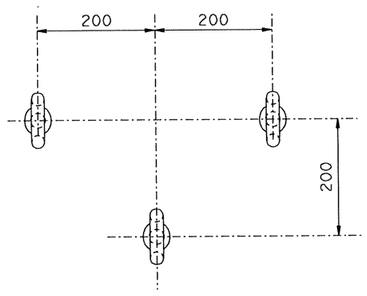


## DETAIL A (3 Padeye unit)
1:5

NOTES:

1. For service platform details, see "Road Plans".
2. Crossbeams with service platform are PP14, 32, 50, 80 and 110. Platforms are attached to west face.
3. For rail details, see "Crossbeam Access Details No.4" sheet.
4. For padeye details, see "Girder Access Details No.10" sheet.

100 % PS&E

DATE PLOTTED => 29 JUN 2007 TIME PLOTTED => 10:18:15
USERNAME => ptom

ALL DIMENSIONS ARE IN MILLIMETERS UNLESS OTHERWISE SHOWN

SAN FRANCISCO OAKLAND BAY BRIDGE
EAST SPAN SEISMIC SAFETY PROJECT
SELF-ANCHORED SUSPENSION BRIDGE (SUPERSTRUCTURE & TOWER)

# CROSSBEAM ACCESS DETAILS NO. 3

R. Valizadeh/V. Toan/Y.L./W.L./F.C.
DESIGN OVERSIGHT
Ryan Valizadeh / Vong Toan / Y. Liu
SIGN OFF DATE 06/22/07

| | BY | CHECKED |
|---|---|---|
| DESIGN | M. Nader | N. Vo |
| DETAILS | G. Baker | N. Vo |
| QUANTITIES | G. Baker | N. Vo |

PREPARED FOR THE STATE OF CALIFORNIA
DEPARTMENT OF TRANSPORTATION

R. Manzanarez
PROJECT ENGINEER

BRIDGE NO. 34-0006L/R
KILOMETER POST 13.2/13.9

CU 04
EA 0120F1

DISREGARD PRINTS BEARING EARLIER REVISION DATES →

REVISION DATES (PRELIMINARY STAGE ONLY): 04/06/02 07/01/02 12/19/02

SHEET 538RI OF

Rev. Date: 5-18-98

ORIGINAL SCALE IN MILLIMETERS FOR REDUCED PLANS 0 10 20 30 40 50 60 70 80 90 100

FILE => I:\bb\04-012001\sas\contract plans and cco\cco\In progress\cco#41\dgn\akcad03.dgn