DIST.	COUNTY	ROUTE	KILOMETER POST TOTAL PROJECT	SHEET NO.	TOTAL SHEETS
04	SF	80	13.2/13.9	938R3	1204

REGISTERED ENGINEER - CIVIL

12-6-04
PLANS APPROVAL DATE

REGISTERED PROFESSIONAL ENGINEER Marwan N. Nader No. C 054426 Exp. 12/31/09 CIVIL STATE OF CALIFORNIA

The State of California or its officers or agents shall not be responsible for the accuracy or completeness of electronic copies of this plan sheet.

T.Y. LIN / MOFFATT & NICHOL
825 BATTERY STREET
SAN FRANCISCO, CA 94111

Caltrans now has a web site! To get to the web site, go to: http://www.dot.ca.gov

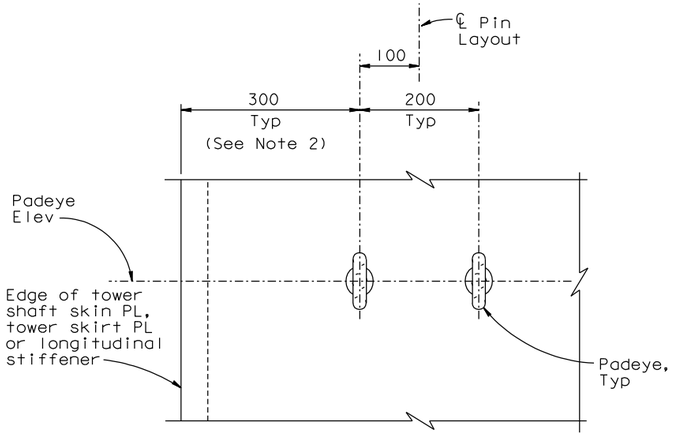

2 PIN CONFIGURATION
1:5

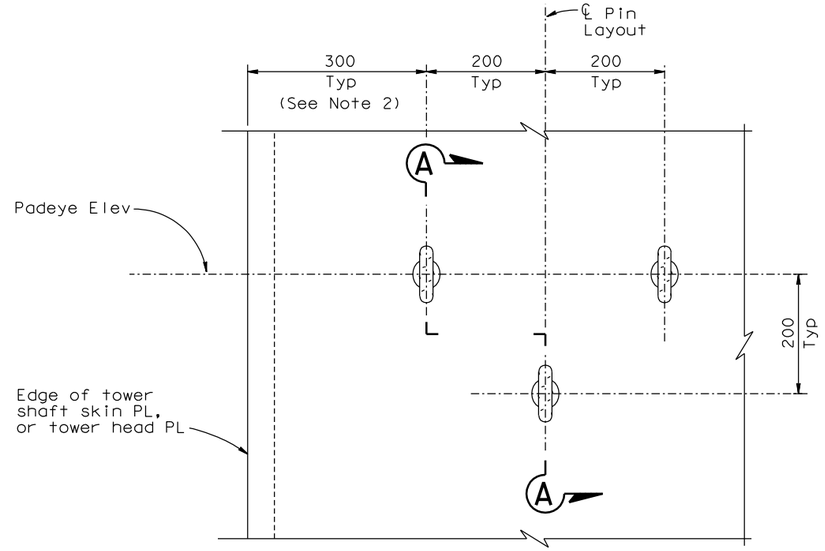

3 PIN CONFIGURATION
1:5

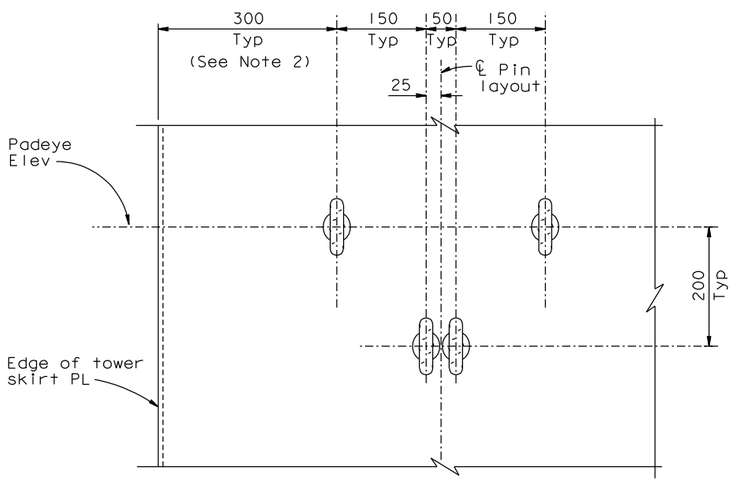

4 PIN CONFIGURATION
1:5

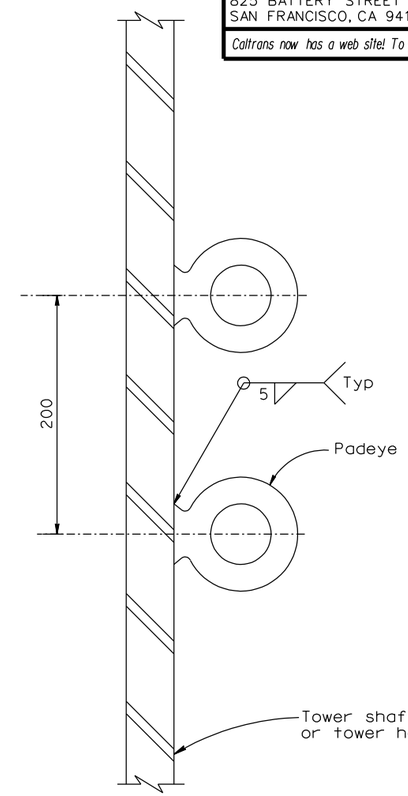

SECTION A-A
1:2.5

PADEYE CONFIGURATION

NOTES:

1. For Padeye typical details and design force, see "Girder Access Details No.10" sheet.
2. At corner DE of skin plate D of the southwest shaft, distance from edge to pin configuration shall be increased from 300 mm to 700 mm to provide clearance for mechanical piping.
3. (3) Padeyes on tower skin plate D of the north and west shaft near the D-E corner that are in the path of elevator support attachments may be removed.

CONTRACT CHANGE ORDER NO. ____
SHEET ___ OF ___

REQUESTS FOR INFORMATION NOT ADDRESSED IN THIS CCO REMAIN IN FORCE

MARK	DATE	DESCRIPTIONS	BY	CH'D	CCO#
3	03/27/09	PADEYE MODIFICATIONS	NV	MN	41
2	02/12/08	PADEYE MODIFICATIONS	NV	MN	41
1	06/22/07	WELDED PADEYES	NV	MN	41

REVISIONS

R. Valizadeh/V. Toan/Y.L./W.L./F.C.
DESIGN OVERSIGHT
Reza Valizadeh / Vong P. Toan / Y. Liu
SIGN OFF DATE 03/27/09

Rev. Date: 5-18-98

DESIGN	BY M. Nader	CHECKED N. Vo	
DETAILS	BY L. Rus	CHECKED D. Harrison	
QUANTITIES	BY L. Rus	CHECKED D. Harrison	

ORIGINAL SCALE IN MILLIMETERS FOR REDUCED PLANS 0 10 20 30 40 50 60 70 80 90 100

PREPARED FOR THE STATE OF CALIFORNIA DEPARTMENT OF TRANSPORTATION

R. Manzanarez
PROJECT ENGINEER

CU 04
EA 0120F1

ALL DIMENSIONS ARE IN MILLIMETERS UNLESS OTHERWISE SHOWN

BRIDGE NO. 34-0006L/R
KILOMETER POST 13.2/13.9

DISREGARD PRINTS BEARING EARLIER REVISION DATES → 05/31/01 04/08/02 07/01/02 12/19/02

SAN FRANCISCO OAKLAND BAY BRIDGE
EAST SPAN SEISMIC SAFETY PROJECT
SELF-ANCHORED SUSPENSION BRIDGE
(SUPERSTRUCTURE & TOWER)

TOWER ACCESS DETAILS NO.22

SHEET 52IR3 OF

FILE => I:\bb\04-012001\sas\contract plans and cco\cco\cco#41\revision 03-27-09\dgn\akacc22.dgn

USERNAME => cwinrow DATE PLOTTED => 27 MAR 2009 TIME PLOTTED => 16:48:35

100% PS&E