DIST.	COUNTY	ROUTE	KILOMETER POST TOTAL PROJECT	SHEET NO.	TOTAL SHEETS
04	SF	80	13.2/13.9	934R1	1204

Caltrans Metric

REGISTERED ENGINEER - CIVIL

12-6-04
PLANS APPROVAL DATE

REGISTERED PROFESSIONAL ENGINEER Marwan N. Nader No. C 054426 Exp. 12/31/07 CIVIL STATE OF CALIFORNIA

The State of California or its officers or agents shall not be responsible for the accuracy or completeness of electronic copies of this plan sheet.

T.Y. LIN / MOFFATT & NICHOL
825 BATTERY STREET
SAN FRANCISCO, CA 94111

Caltrans now has a web site! To get to the web site, go to: http://www.dot.ca.gov

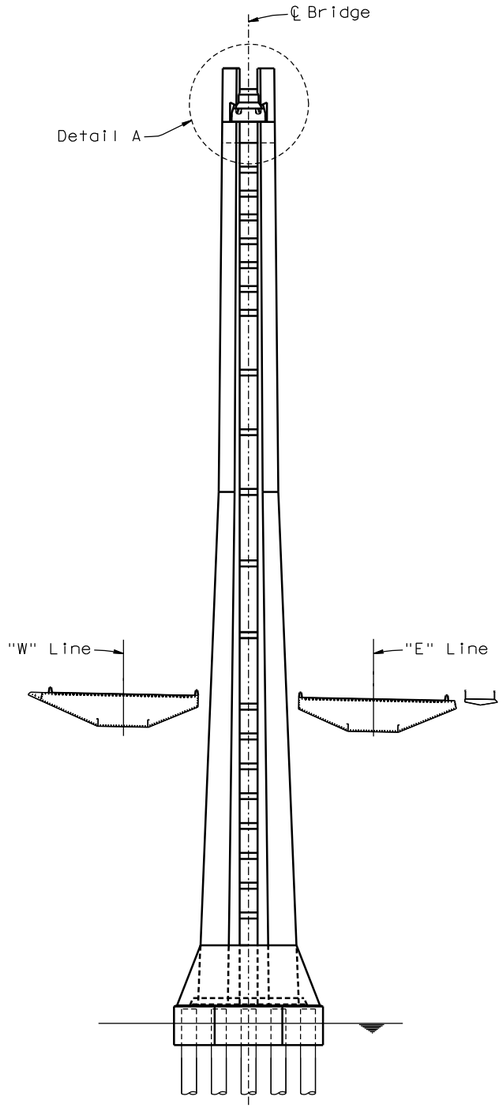

KEY ELEVATION
1:500

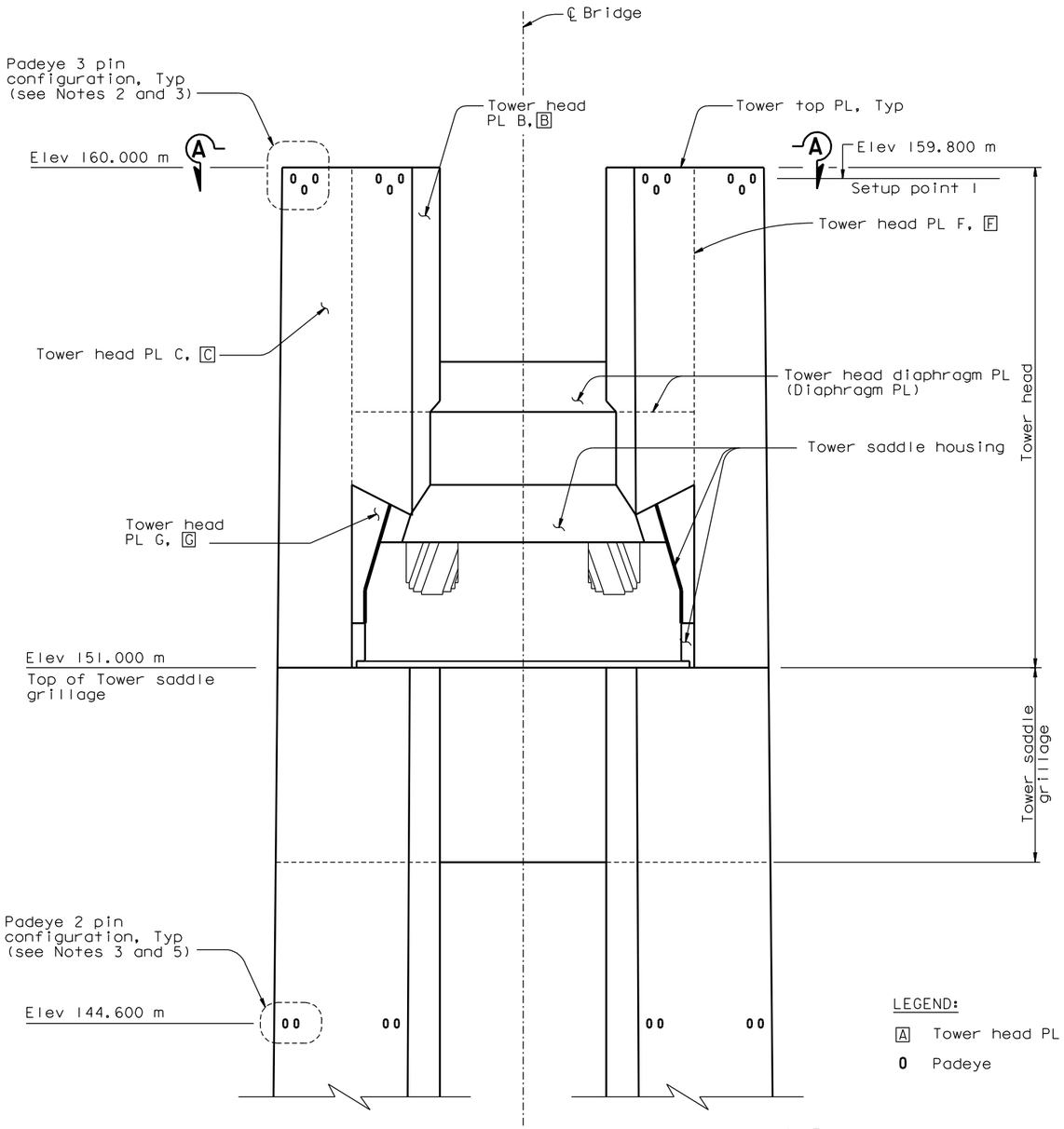

DETAIL A
1:50

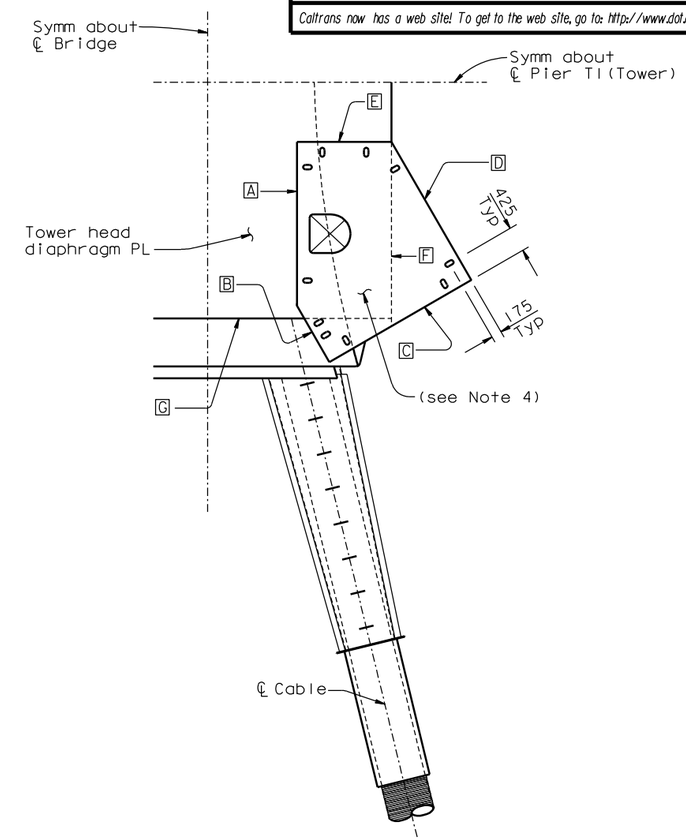

PLAN A-A
1:50
Padeye Layout at Tower Top Plate (see Note 1)

LEGEND:

A Tower head PL designation

0 Padeye

NOTES:

1. Padeye locations shall be shifted to avoid conflict with tower fog light, boom assembly, outrigger and submitted for approval by the Engineer.
2. Padeye 3 pin configuration shall be located at tower head plate A, B, C, D and E.
3. For padeye pin configuration details, see "Tower Access Details No.22" sheet.
4. For other tower head padeyes, see "Tower Access Details No.13" sheet.
5. For padeye layouts on tower shafts, see "Tower Access Details No.17" sheet.
6. For padeye typical detail and design force, see "Girder Access Details No.10" sheet.

MARK	DATE	DESCRIPTIONS	BY	CH'D	CCO#
1	06/22/07	WELDED PADEYES	NV	MN	41

REVISIONS

CONTRACT CHANGE ORDER NO. _____
SHEET ____ OF ____

PADEYE LAYOUT AT TOWER HEAD
(For clarity only the pad eyes on tower head PL C are shown)

ALL DIMENSIONS ARE IN MILLIMETERS UNLESS OTHERWISE SHOWN

SAN FRANCISCO OAKLAND BAY BRIDGE
EAST SPAN SEISMIC SAFETY PROJECT
SELF-ANCHORED SUSPENSION BRIDGE
(SUPERSTRUCTURE & TOWER)

TOWER ACCESS DETAILS NO.18

R. Valizadeh/V. Toan/Y.L./W.L./F.C.
DESIGN OVERSIGHT
Roy Valizadeh / Vong Toan / Y. Liu
SIGN OFF DATE 06/22/07

	BY	CHECKED
DESIGN	M. Nader	N. Vo
DETAILS	L. Rus	D. Harrison
QUANTITIES	L. Rus	D. Harrison

PREPARED FOR THE STATE OF CALIFORNIA DEPARTMENT OF TRANSPORTATION

R. Manzanarez
PROJECT ENGINEER

BRIDGE NO. 34-0006L/R
KILOMETER POST 13.2/13.9

CU 04
EA 0120F1

Rev. Date: 5-18-98

ORIGINAL SCALE IN MILLIMETERS FOR REDUCED PLANS 0 10 20 30 40 50 60 70 80 90 100

DISREGARD PRINTS BEARING EARLIER REVISION DATES

REVISION DATES (PRELIMINARY STAGE ONLY) 04/08/02 07/01/02 12/19/02

SHEET 517R1 OF

FILE => L:\BB\04-012001\SAS\Contract Plans and CCO\CCO\In Progress\CCO#41\DGN\akacc18.dgn

100% PS&E

USERNAME => vignatovs DATE PLOTTED => 03 JUL 2007 TIME PLOTTED => 10:56:34