DIST.	COUNTY	ROUTE	KILOMETER POST TOTAL PROJECT	SHEET NO.	TOTAL SHEETS
04	SF	80	13.2/13.9	954R1	1204

Caltrans Metric

REGISTERED ENGINEER - CIVIL

12-6-04

PLANS APPROVAL DATE

REGISTERED PROFESSIONAL ENGINEER Marwan N. Nader No. C 54426 Exp. 12/31/07 CIVIL STATE OF CALIFORNIA

The State of California or its officers or agents shall not be responsible for the accuracy or completeness of electronic copies of this plan sheet.

T.Y. LIN / MOFFATT & NICHOL
825 BATTERY STREET
SAN FRANCISCO, CA 94111

To get to the web site, go to: http://www.dot.ca.gov

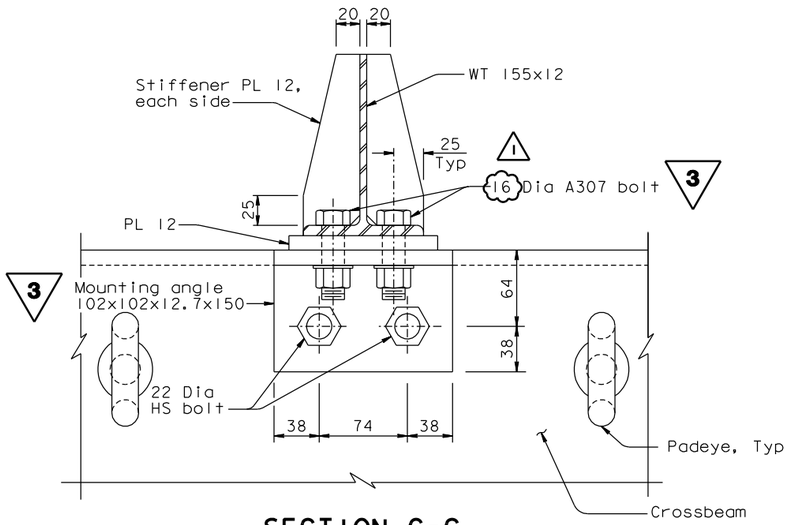

SECTION C-C
1:2.5

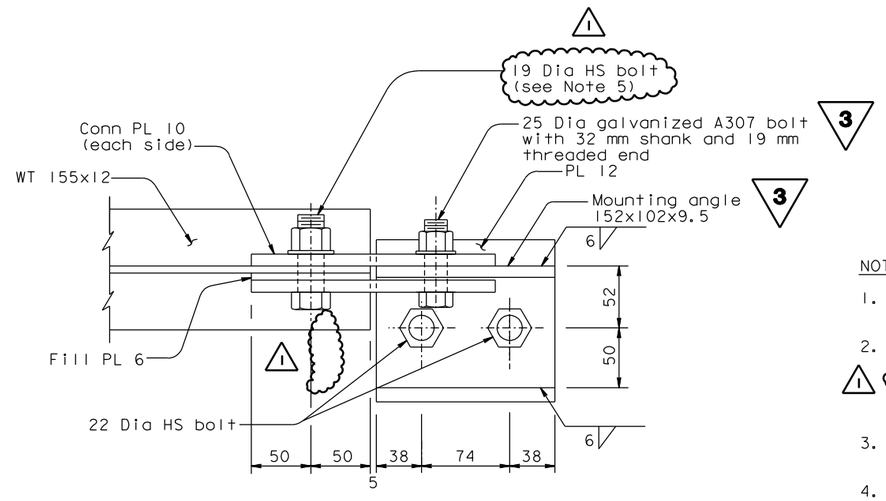

VIEW D-D
1:2.5

NOTES:

1. The bolt sizes shown correspond to US Standard bolt sizes and shall be galvanized.
2. All mounting angles connected by HS Bolts shall be provided at both faces of all crossbeams except above utility platforms. For locations see "Crossbeam Access Details No. 1" and "Crossbeam Access Details No. 3" sheets.
3. All A307 bolts shall be wrench tightened for future removal by maintenance personnel.
4. The 36 outriggers shall be installed at crossbeams located at panel points 27, 75, and 111, or as otherwise directed by the Engineer.
5. Bolt threads shall be excluded from the shear plane.
6. For padeye typical detail and design force, see "Girder Access Details No. 10" sheet.

MARK	DATE	DESCRIPTIONS	BY	CH'D	CCO#
1	06/22/07	WELDED PADEYES	NV	MN	41

REVISIONS

CONTRACT CHANGE ORDER NO. ____
SHEET ___ OF ___

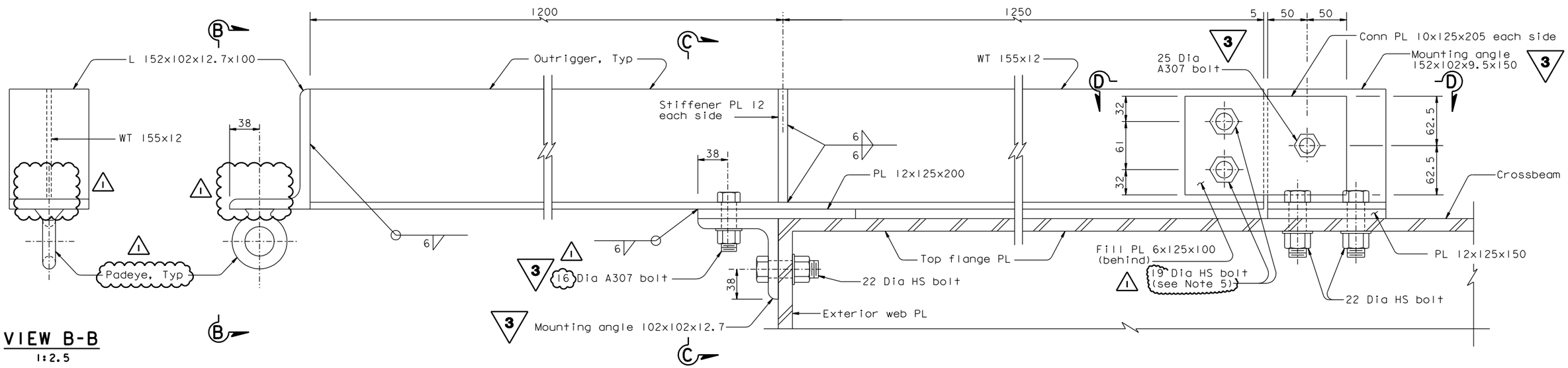

VIEW B-B
1:2.5

SECTION A-A
1:2.5

REVISED PER ADDENDUM NO. 3 DATED NOVEMBER 7, 2005

ALL DIMENSIONS ARE IN MILLIMETERS UNLESS OTHERWISE SHOWN

R. Valizadeh/V. Toan/Y.L./W.L./F.C.
DESIGN OVERSIGHT
Rezn Valizadeh / Vong Toan / Y. Liu
SIGN OFF DATE 06/22/07

	BY	CHECKED
DESIGN	M. Nader	N. Vo
DETAILS	G. Baker	N. Vo
QUANTITIES	G. Baker	N. Vo

PREPARED FOR THE STATE OF CALIFORNIA DEPARTMENT OF TRANSPORTATION

R. Manzanarez
PROJECT ENGINEER

BRIDGE NO. 34-0006L/R
KILOMETER POST 13.2/13.9

SAN FRANCISCO OAKLAND BAY BRIDGE
EAST SPAN SEISMIC SAFETY PROJECT
SELF-ANCHORED SUSPENSION BRIDGE
(SUPERSTRUCTURE & TOWER)

CROSSBEAM ACCESS DETAILS NO. 2

Rev. Date: 5-18-98

ORIGINAL SCALE IN MILLIMETERS FOR REDUCED PLANS 0 10 20 30 40 50 60 70 80 90 100

CU 04
EA 0120F1

DISREGARD PRINTS BEARING EARLIER REVISION DATES

REVISION DATES (PRELIMINARY STAGE ONLY) 04/08/02 07/01/02 12/17/02 10/13/05

SHEET 537R1 OF

FILE => I:\bb\04-012001\sas\contract plans and cco\cco\in progress\cco#41\dgn\akcad02.dgn

100 % PS&E

DATE PLOTTED => 02 JUL 2007 TIME PLOTTED => 10:09:37

USERNAME => ptom