DIST.	COUNTY	ROUTE	KILOMETER POST TOTAL PROJECT	SHEET NO.	TOTAL SHEETS
04	SF	80	13.2/13.9	949R1	1204

REGISTERED ENGINEER - CIVIL

12-6-04

PLANS APPROVAL DATE

REGISTERED PROFESSIONAL ENGINEER Marwan N. Nader No. C 054426 Exp. 12/31/09 CIVIL STATE OF CALIFORNIA

The State of California or its officers or agents shall not be responsible for the accuracy or completeness of electronic copies of this plan sheet.

T.Y. LIN / MOFFATT & NICHOL
825 BATTERY STREET
SAN FRANCISCO, CA 94111

Caltrans now has a web site! To get to the web site, go to: http://www.dot.ca.gov

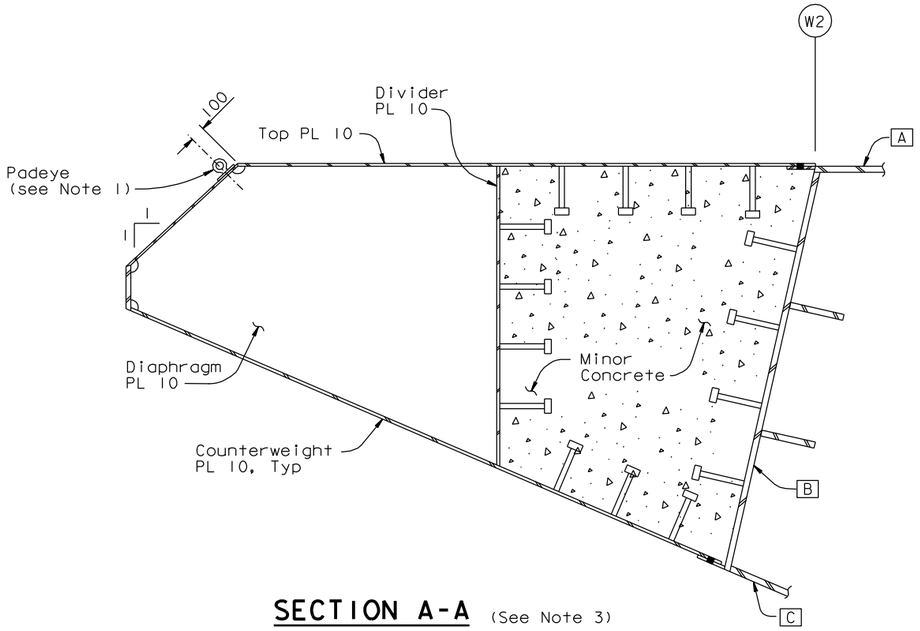

SECTION A-A (See Note 3)

1:20

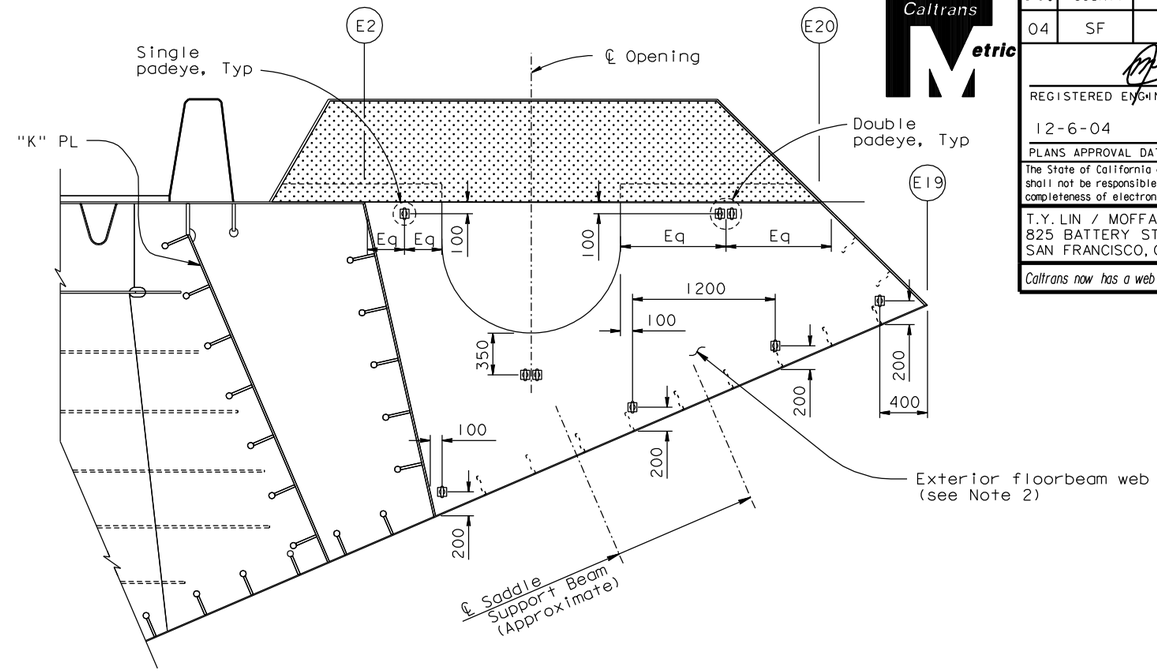

GIRDER ACCESS AT EXTERIOR PLATE AT PP118

("E" Line shown, "W" Line similar)

1:25

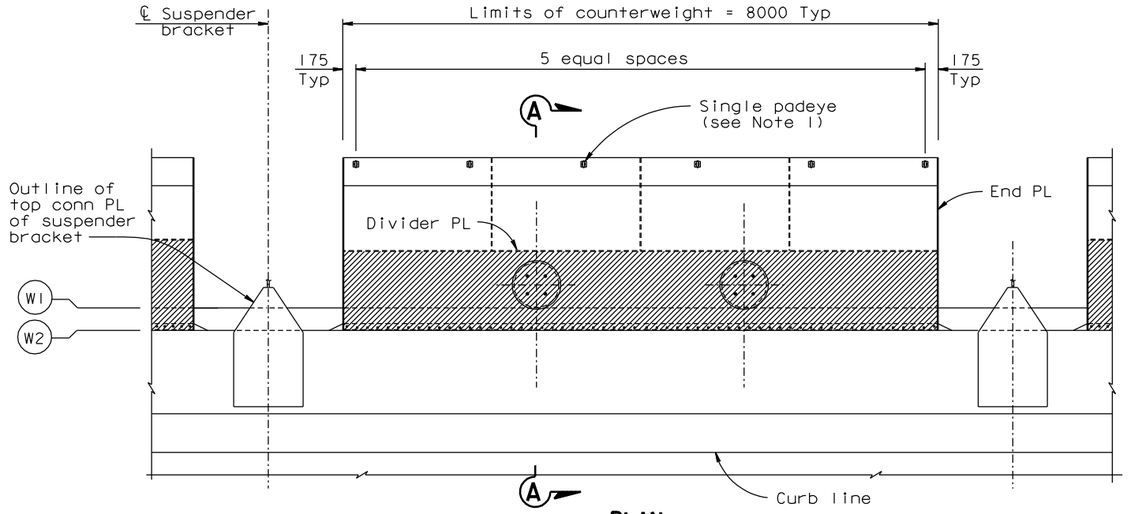

PLAN

COUNTERWEIGHT ACCESS LAYOUT

1:40

LEGEND:

Limits of minor concrete

Cable Saddle housing

NOTES:

1. For counterweight padeye use "Padeye At Bikepath Detail", see "Girder Access Details No. 10" sheet.
2. For saddle housing details, see "East Saddle Housing Details" sheets.
3. For counterweight details, see "Typical Girder Details No. 17" sheet.
4. Padeyes shall be installed as directed by the Engineer. (1)

CONTRACT CHANGE ORDER NO. ____
SHEET ___ OF ___

REQUESTS FOR INFORMATION NOT ADDRESSED IN THIS CCO REMAIN IN FORCE

ALL DIMENSIONS ARE IN MILLIMETERS UNLESS OTHERWISE SHOWN

R. Valizadeh/V. Toan/Y.L./W.L./F.C.
DESIGN OVERSIGHT
Roya Valizadeh / Vong Toan / Y. Liu
SIGN OFF DATE 03/27/09

MARK	DATE	DESCRIPTIONS	BY	CH'D	CCO#
1	03/27/09	PADEYE MODIFICATIONS	GB	MN	41

REVISIONS

	BY	CHECKED
DESIGN	M. Nader	N. Vo
DETAILS	M. Roberts	N. Vo
QUANTITIES	M. Roberts	N. Vo

PREPARED FOR THE STATE OF CALIFORNIA DEPARTMENT OF TRANSPORTATION

R. Manzanarez
PROJECT ENGINEER

BRIDGE NO. 34-0006L/R
KILOMETER POST 13.2/13.9

SAN FRANCISCO OAKLAND BAY BRIDGE
EAST SPAN SEISMIC SAFETY PROJECT
SELF-ANCHORED SUSPENSION BRIDGE
(SUPERSTRUCTURE & TOWER)

GIRDER ACCESS DETAILS NO. 9

Rev. Date: 5-18-98

ORIGINAL SCALE IN MILLIMETERS FOR REDUCED PLANS 0 10 20 30 40 50 60 70 80 90 100

CU 04
EA 0120F1

DISREGARD PRINTS BEARING EARLIER REVISION DATES

REVISION DATES (PRELIMINARY STAGE ONLY) 04/08/02 07/01/02 12/19/02

SHEET 532R1 OF

FILE => I:\bb\04-012001\sas\contract plans and cco\cco\cco=41\revision 03-27-09\dgn\akacc09b.dgn

100% PS&E

USERNAME => dwinrow DATE PLOTTED => 30 MAR 2009 TIME PLOTTED => 13:46:19