DIST.	COUNTY	ROUTE	KILOMETER POST TOTAL PROJECT	SHEET NO.	TOTAL SHEETS
04	SF	80	13.2/13.9	945R1	1204

REGISTERED ENGINEER - CIVIL

12-6-04
PLANS APPROVAL DATE

REGISTERED PROFESSIONAL ENGINEER Marwan N. Nader No. C 054426 Exp. 12/31/09 CIVIL STATE OF CALIFORNIA

The State of California or its officers or agents shall not be responsible for the accuracy or completeness of electronic copies of this plan sheet.

T.Y. LIN / MOFFATT & NICHOL
825 BATTERY STREET
SAN FRANCISCO, CA 94111

Caltrans now has a web site! To get to the web site, go to: http://www.dot.ca.gov

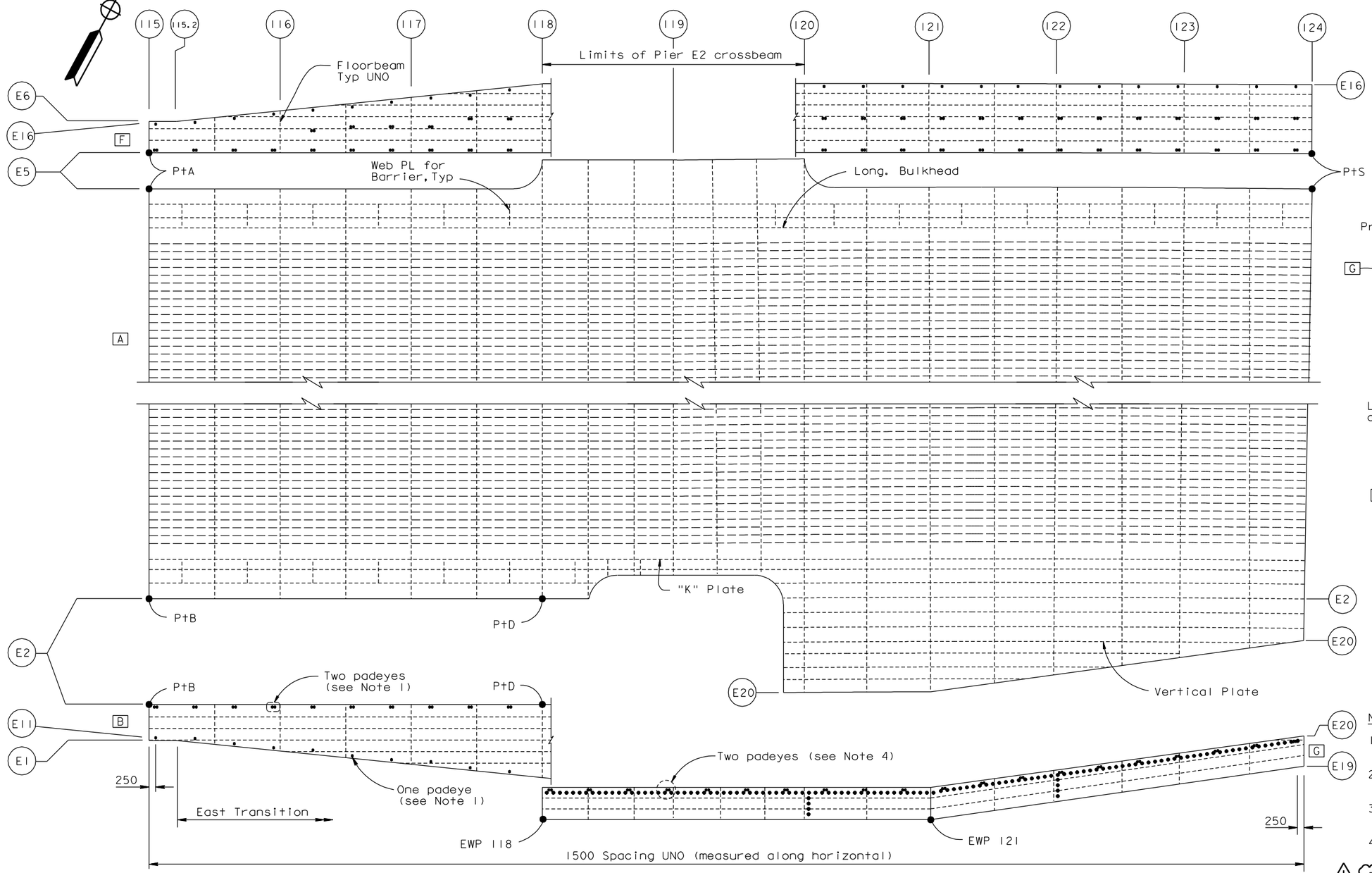

GIRDER ACCESS LAYOUT AT EAST TRANSITION

1:80

("E" Line shown, "W" Line similar)

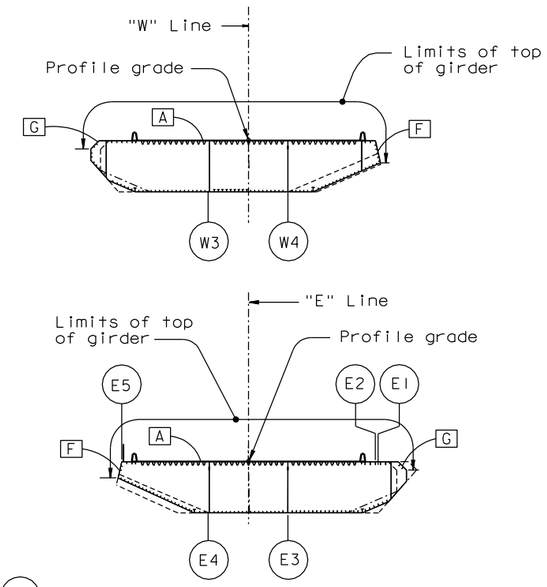

KEY CROSS SECTIONS

1:400

NOTES:

1. For padeye details, see "Girder Access Details No. 10" sheet.
2. For girder framing and layout, see "Girder At East Transition No. 11" sheet.
3. Intermediate padeye sets are located at 50 mm from nearest shown stiffener.
4. For padeyes at architectural splice, see "Girder Access Details No. 10" sheet.
5. Padeyes shall be installed as directed by the Engineer.

CONTRACT CHANGE ORDER NO. ____
SHEET ____ OF ____

REQUESTS FOR INFORMATION NOT ADDRESSED IN THIS CCO REMAIN IN FORCE

ALL DIMENSIONS ARE IN MILLIMETERS UNLESS OTHERWISE SHOWN

R. Valizadeh/V. Toan/Y.L./W.L./F.C.
DESIGN OVERSIGHT
SIGN OFF DATE 03/27/09

MARK	DATE	DESCRIPTIONS	BY	CH'D	CCO#
1	03/27/09	PADEYE MODIFICATIONS	GB	MN	41

REVISIONS

DESIGN	BY M. Nader	CHECKED N. Vo	
DETAILS	BY M. Roberts	CHECKED N. Vo	
QUANTITIES	BY M. Roberts	CHECKED N. Vo	

PREPARED FOR THE STATE OF CALIFORNIA DEPARTMENT OF TRANSPORTATION

R. Manzanarez
PROJECT ENGINEER

BRIDGE NO. 34-0006L/R
KILOMETER POST 13.2/13.9

SAN FRANCISCO OAKLAND BAY BRIDGE
EAST SPAN SEISMIC SAFETY PROJECT
SELF-ANCHORED SUSPENSION BRIDGE
(SUPERSTRUCTURE & TOWER)

GIRDER ACCESS DETAILS NO. 5

Rev. Date: 5-18-98

ORIGINAL SCALE IN MILLIMETERS FOR REDUCED PLANS 0 10 20 30 40 50 60 70 80 90 100

CU 04
EA 0120F1

DISREGARD PRINTS BEARING EARLIER REVISION DATES

REVISION DATES (PRELIMINARY STAGE ONLY) 04/08/02 07/01/02 12/19/02

SHEET 528R1 OF

FILE => I:\bb\04-01200I\sas\contract plans and cco\cco\cco#41\revision 03-27-09\dgn\akacc05b.dgn

100% PS&E

USERNAME => dwinrow DATE PLOTTED => 30 MAR 2009 TIME PLOTTED => 13:39:45