Caltrans now has a web site! To get to the web site, go to: http://www.dot.ca.gov

DIST.	COUNTY	ROUTE	KILOMETER POST TOTAL PROJECT	SHEET NO.	TOTAL SHEETS
04	SF	80	13.2/13.9	936R1	1204

Caltrans Metric

REGISTERED ENGINEER - CIVIL

12-6-04
PLANS APPROVAL DATE

REGISTERED PROFESSIONAL ENGINEER Marwan N. Nader No. C 054426 Exp. 12/31/07 CIVIL STATE OF CALIFORNIA

The State of California or its officers or agents shall not be responsible for the accuracy or completeness of electronic copies of this plan sheet.

T.Y. LIN / MOFFATT & NICHOL
825 BATTERY STREET
SAN FRANCISCO, CA 94111

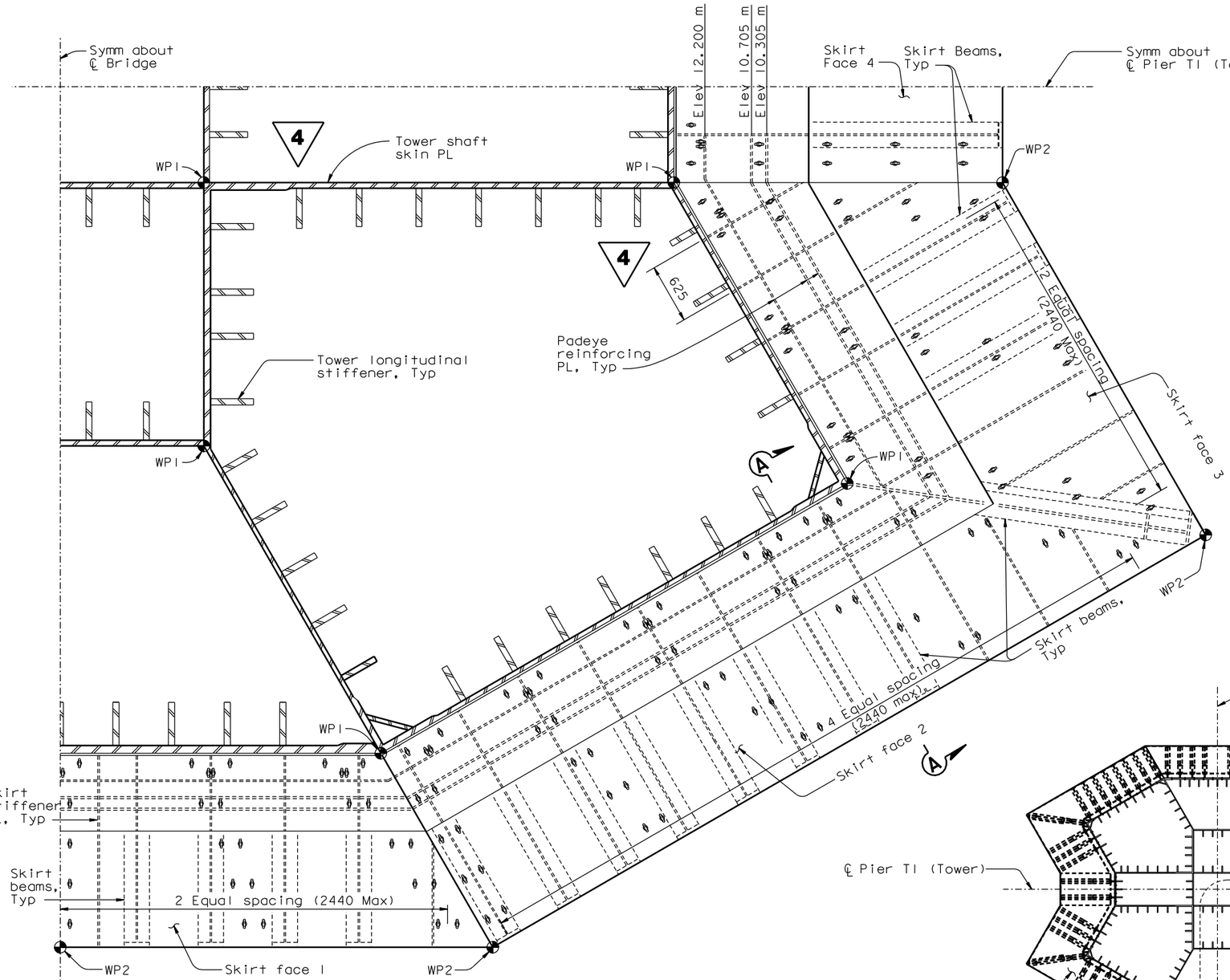

DETAIL A
1:25

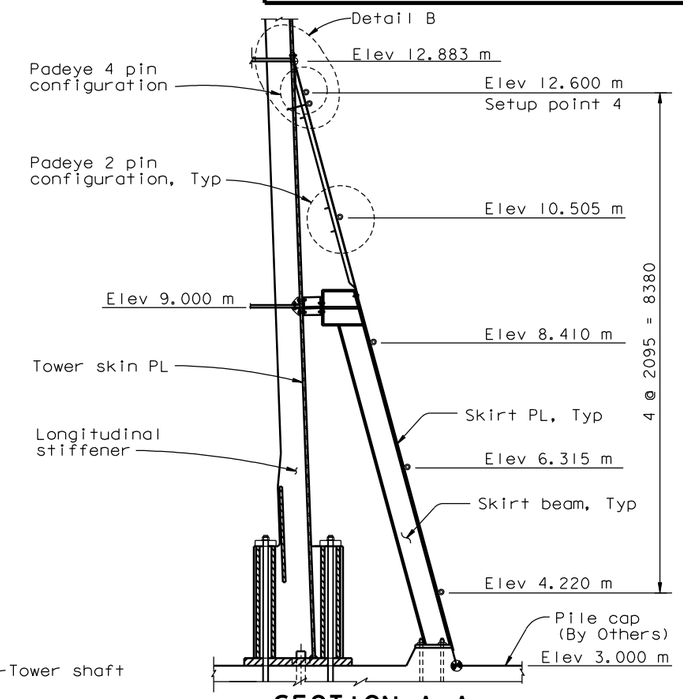

SECTION A-A
1:50

(Padeye NTS and they are shown for clarity)

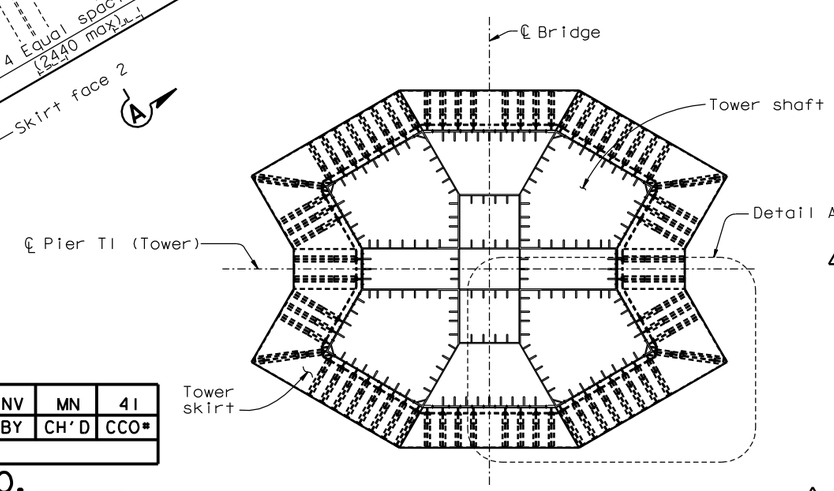

PLAN VIEW @ Elev 13.000 m
1:150

LEGEND:

Padeye

WP1 Tower shaft working point

WP2 Tower skirt working point

NOTES:

1. For Detail B, see "Tower Access Details No.21" sheet.
2. For details not shown, see "Tower Skirt Details" sheets.
3. For Padeye typical detail and design force, see "Girder Access Details No.10" sheet.
4. For Padeye pin configuration details, see "Tower Access Details No.22" sheet.

MARK	DATE	DESCRIPTIONS	BY	CH'D	CCO#
1	06/22/07	WELDED PADEYES	NV	MN	41

REVISIONS

CONTRACT CHANGE ORDER NO. _____
SHEET ___ OF ___

4 REVISED PER ADDENDUM NO. 4 DATED DECEMBER 9, 2005

PADEYE LAYOUT AT TOWER SKIRT

ALL DIMENSIONS ARE IN MILLIMETERS UNLESS OTHERWISE SHOWN

SAN FRANCISCO OAKLAND BAY BRIDGE
EAST SPAN SEISMIC SAFETY PROJECT
SELF-ANCHORED SUSPENSION BRIDGE
(SUPERSTRUCTURE & TOWER)

TOWER ACCESS DETAILS NO.20

R. Valizadeh/V. Toan/Y.L./W.L./F.C.
DESIGN OVERSIGHT
Reza Valizadeh / Vong Toan / Y. Liu
SIGN OFF DATE 06/22/07

	BY	CHECKED
DESIGN	M. Nader	N. Vo
DETAILS	L. Rus	D. Harrison
QUANTITIES	L. Rus	D. Harrison

PREPARED FOR THE STATE OF CALIFORNIA DEPARTMENT OF TRANSPORTATION

R. Manzanarez
PROJECT ENGINEER

BRIDGE NO. 34-0006L/R
KILOMETER POST 13.2/13.9

CU 04
EA 0120F1

DISREGARD PRINTS BEARING EARLIER REVISION DATES 04/08/02 01/07/02 12/18/02 01/18/03 11/13/05

SHEET 519R1 OF

Rev. Date: 5-18-98

ORIGINAL SCALE IN MILLIMETERS FOR REDUCED PLANS 0 10 20 30 40 50 60 70 80 90 100

FILE => I:\bb\04-012001\sas\contract plans and cco\cco\in progress\cco#41\dgn\akacc20.dgn

USERNAME => ptom DATE PLOTTED => 29 JUN 2007 TIME PLOTTED => 10:09:34

100% PS&E