MARK	DATE	DESCRIPTIONS	BY	CH'D	CCO#
1	06/22/07	WELDED PADEYES	NV	MN	41

REVISIONS

CONTRACT CHANGE ORDER NO. _____
SHEET ___ OF ___

DIST.	COUNTY	ROUTE	KILOMETER POST TOTAL PROJECT	SHEET NO.	TOTAL SHEETS
04	SF	80	13.2/13.9	935R1	1204

REGISTERED ENGINEER - CIVIL

12-6-04
PLANS APPROVAL DATE

REGISTERED PROFESSIONAL ENGINEER Marwan N. Nader No. C 054426 Exp. 12/31/07 CIVIL STATE OF CALIFORNIA

The State of California or its officers or agents shall not be responsible for the accuracy or completeness of electronic copies of this plan sheet.

T.Y. LIN / MOFFATT & NICHOL
825 BATTERY STREET
SAN FRANCISCO, CA 94111

Caltrans now has a web site! To get to the web site, go to: http://www.dot.ca.gov

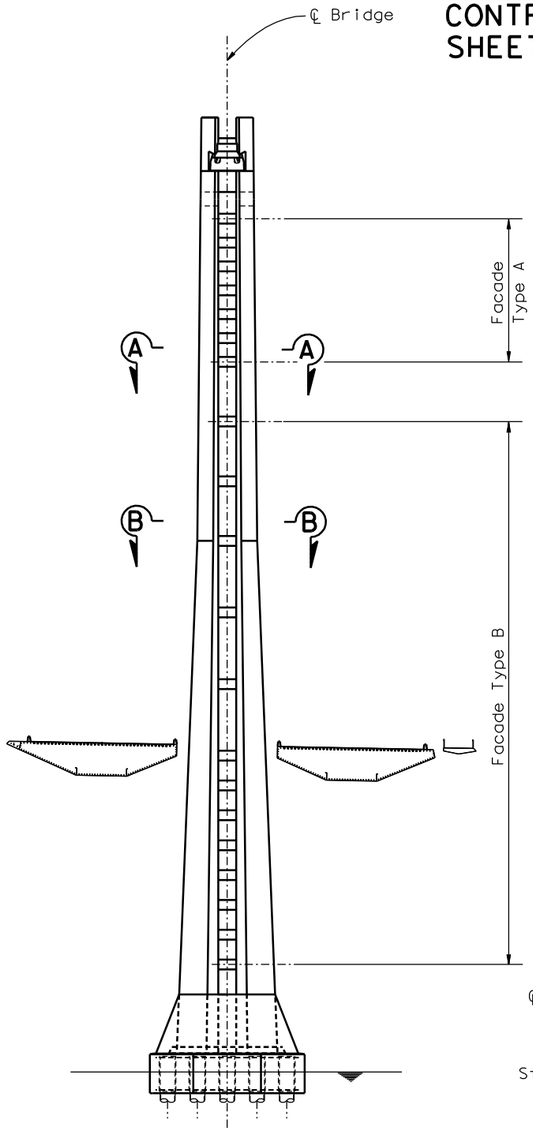

KEY ELEVATION
1:500

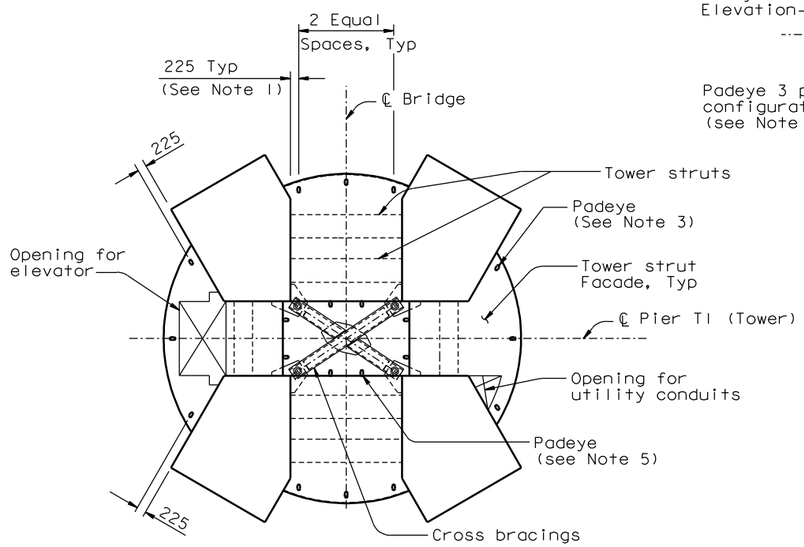

SECTION A-A
1:80
Strut Facade Type A

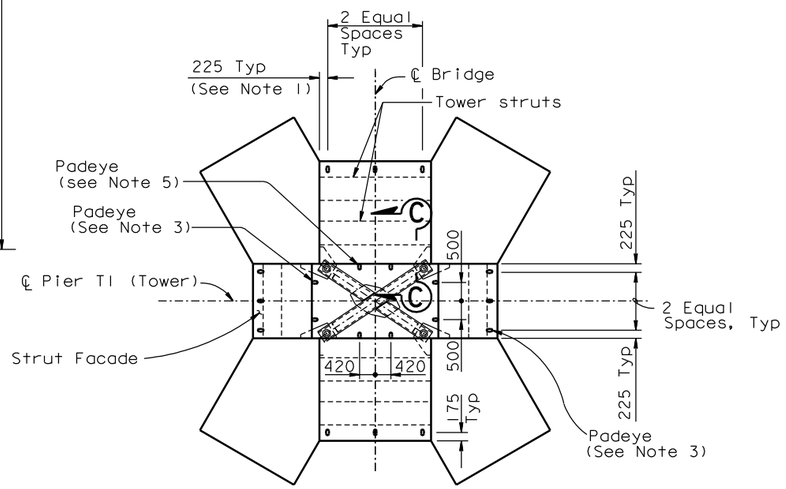

SECTION B-B
1:80
Strut Facade Type B

PADEYE LAYOUT AT TOWER STRUT FACADES

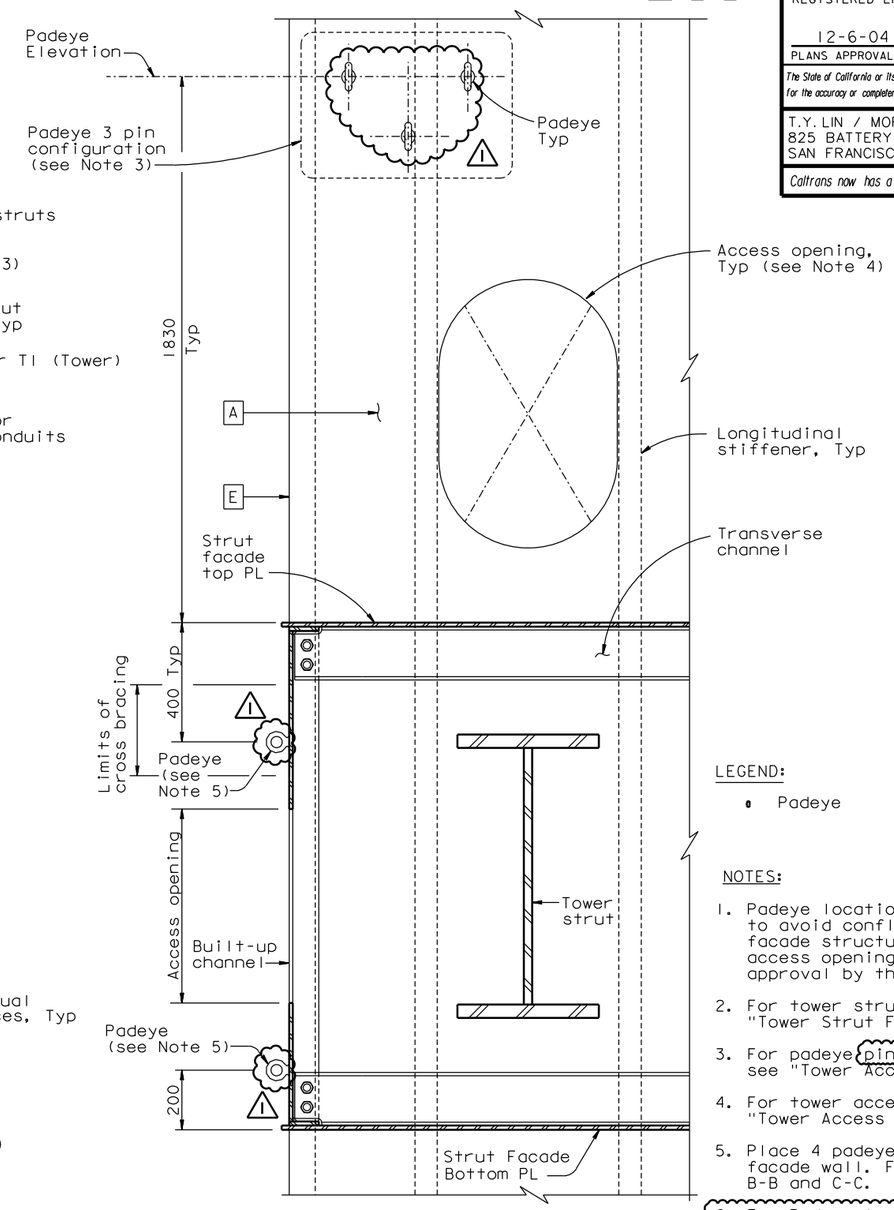

SECTION C-C
1:10
Tower cross bracings not shown for clarity

LEGEND:

- Padeye

NOTES:

1. Padeye locations shall be shifted to avoid conflict with tower strut facade structural components and access openings and submitted for approval by the Engineer.
2. For tower strut facade details, see "Tower Strut Facade Details" sheets.
3. For padeye pin configuration details, see "Tower Access Details No. 22" sheet.
4. For tower access opening details, see "Tower Access Details No. 4" sheet.
5. Place 4 padeyes on each inbound strut facade wall. For locations see sections B-B and C-C.
6. For Padeye typical details and design force, see "Girder Access Details No. 10" sheet.

ALL DIMENSIONS ARE IN MILLIMETERS UNLESS OTHERWISE SHOWN

R. Valizadeh/V. Toan/Y.L./W.L./F.C.
DESIGN OVERSIGHT
Roya Valizadeh / Vong Toan / Y. Liu
SIGN OFF DATE 06/22/07

	BY	CHECKED
DESIGN	M. Nader	N. Vo
DETAILS	L. Rus	D. Harrison
QUANTITIES	L. Rus	D. Harrison

PREPARED FOR THE STATE OF CALIFORNIA DEPARTMENT OF TRANSPORTATION

R. Manzanarez
PROJECT ENGINEER

BRIDGE NO. 34-0006L/R
KILOMETER POST 13.2/13.9

SAN FRANCISCO OAKLAND BAY BRIDGE
EAST SPAN SEISMIC SAFETY PROJECT
SELF-ANCHORED SUSPENSION BRIDGE
(SUPERSTRUCTURE & TOWER)

TOWER ACCESS DETAILS NO. 19

Rev. Date: 5-18-98

ORIGINAL SCALE IN MILLIMETERS FOR REDUCED PLANS 0 10 20 30 40 50 60 70 80 90 100

CU 04
EA 0120F1

DISREGARD PRINTS BEARING EARLIER REVISION DATES

REVISION DATES (PRELIMINARY STAGE ONLY) 04/08/02 07/01/02 12/19/02

SHEET 518R1 OF

FILE => I:\bb\04-012001\sas\contract plans and cco\cco\in progress\cco#41\dgn\akacc19.dgn

100% PS&E
DATE PLOTTED => 29 JUN 2007 TIME PLOTTED => 10:07:54
USERNAME => ptom