DIST.	COUNTY	ROUTE	KILOMETER POST TOTAL PROJECT	SHEET NO.	TOTAL SHEETS
04	SF	80	13.2/13.9	931R1	1204

REGISTERED ENGINEER - CIVIL

12-6-04
PLANS APPROVAL DATE

REGISTERED PROFESSIONAL ENGINEER Marwan N.Nader No. C 54426 Exp. 12/31/07 CIVIL STATE OF CALIFORNIA

The State of California or its officers or agents shall not be responsible for the accuracy or completeness of electronic copies of this plan sheet.

T.Y. LIN / MOFFATT & NICHOL
825 BATTERY STREET
SAN FRANCISCO, CA 94111

Caltrans now has a web site! To get to the web site, go to: http://www.dot.ca.gov

Caltrans Metric

MARK	DATE	DESCRIPTIONS	BY	CH'D	CCO#
1	06/22/07	WELDED PADEYES	NV	MN	41

REVISIONS

CONTRACT CHANGE ORDER NO. ____
SHEET ___ OF ___

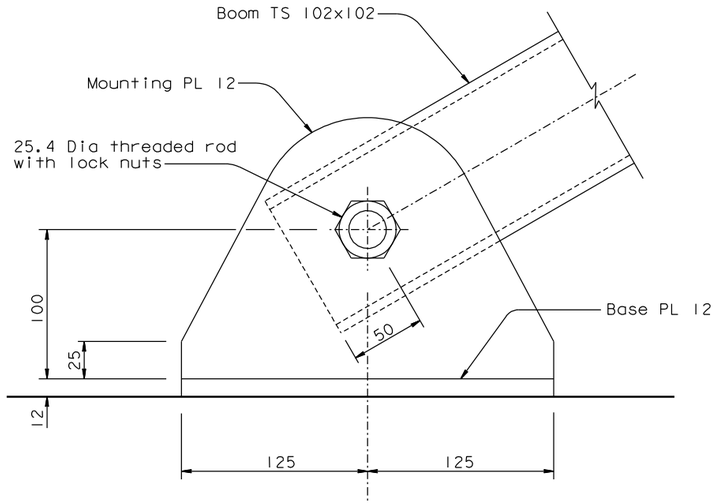

VIEW F-F
1:2

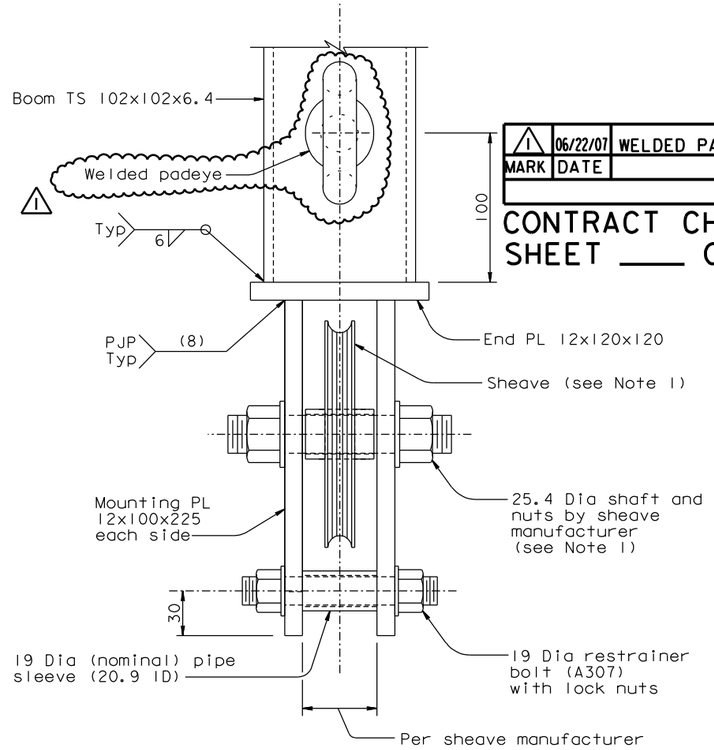

DETAIL A
1:2

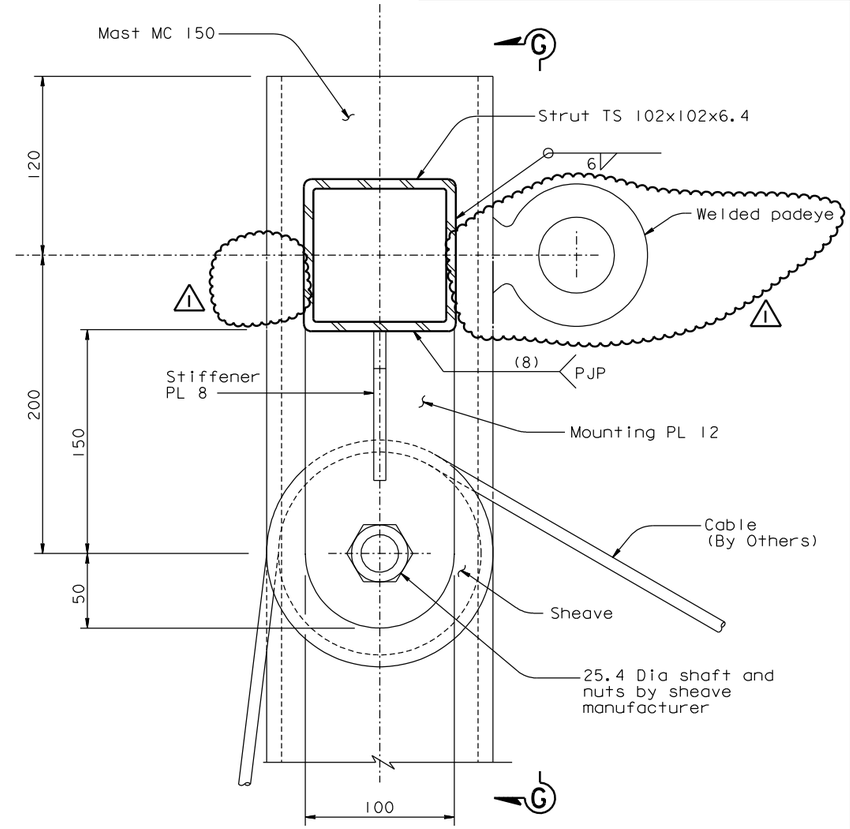

DETAIL C
1:2

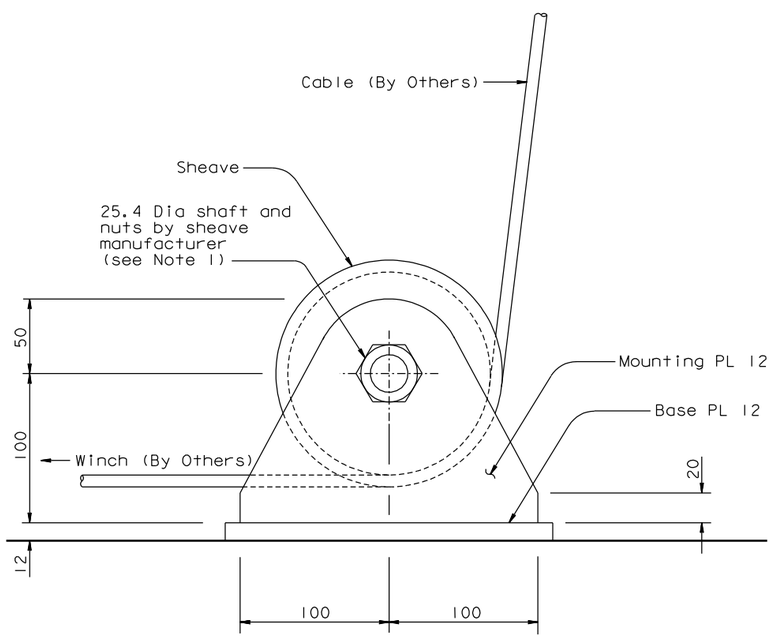

VIEW E-E
1:2

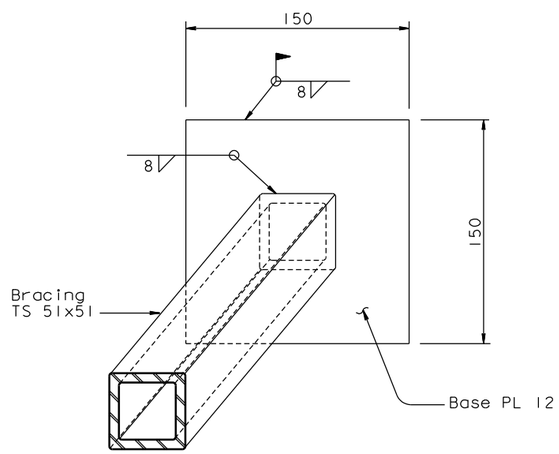

DETAIL B
1:2

NOTES:

1. Sheaves shall be 150 mm Dia with 10 mm groove and a minimum safe working load of 20 kN. Contractor shall provide fasteners for sheaves.
2. For View G-G, see "Tower Access Details No. 16" sheet.
3. 1 For padeye typical detail and design force, see "Girder Access Details No. 10" sheet.

ALL DIMENSIONS ARE IN MILLIMETERS UNLESS OTHERWISE SHOWN

SAN FRANCISCO OAKLAND BAY BRIDGE
EAST SPAN SEISMIC SAFETY PROJECT
SELF-ANCHORED SUSPENSION BRIDGE
(SUPERSTRUCTURE & TOWER)

TOWER ACCESS DETAILS NO. 15

R. Valizadeh/V. Toan/Y.L./W.L./F.C.
DESIGN OVERSIGHT
Roya Valizadeh / Vong Toan / Y. Liu
SIGN OFF DATE 06/22/07

Rev. Date: 5-18-98

	BY	CHECKED
DESIGN	M. Nader	N. Vo
DETAILS	G. Baker	N. Vo
QUANTITIES	G. Baker	N. Vo

PREPARED FOR THE STATE OF CALIFORNIA DEPARTMENT OF TRANSPORTATION

R. Manzanarez
PROJECT ENGINEER

BRIDGE NO. 34-0006L/R
KILOMETER POST 13.2/13.9

ORIGINAL SCALE IN MILLIMETERS FOR REDUCED PLANS 0 10 20 30 40 50 60 70 80 90 100

CU 04
EA 0120F1

DISREGARD PRINTS BEARING EARLIER REVISION DATES

REVISION DATES (PRELIMINARY STAGE ONLY) 04/08/02 07/24/02 12/19/02

SHEET 614R1 OF

FILE => 1:\bb\04-012001\sas\contract plans and cco\cco\in progress\cco#41\dgn\akacc15b.dgn

100% PS&E

DATE PLOTTED => 29 JUN 2007 TIME PLOTTED => 10:02:04

USERNAME => ptom