DIST.	COUNTY	ROUTE	KILOMETER POST TOTAL PROJECT	SHEET NO.	TOTAL SHEETS
04	SF	80	13.2/13.9	912R2	1204

Caltrans Metric

REGISTERED ENGINEER - CIVIL

12-6-04
PLANS APPROVAL DATE

REGISTERED PROFESSIONAL ENGINEER Tien Hung Ho No. C 43990 Exp. 06/30/09 CIVIL STATE OF CALIFORNIA

The State of California or its officers or agents shall not be responsible for the accuracy or completeness of electronic copies of this plan sheet.

T.Y. LIN / MOFFATT & NICHOL
825 BATTERY STREET
SAN FRANCISCO, CA 94111

Caltrans now has a web site! To get to the web site, go to: http://www.dot.ca.gov

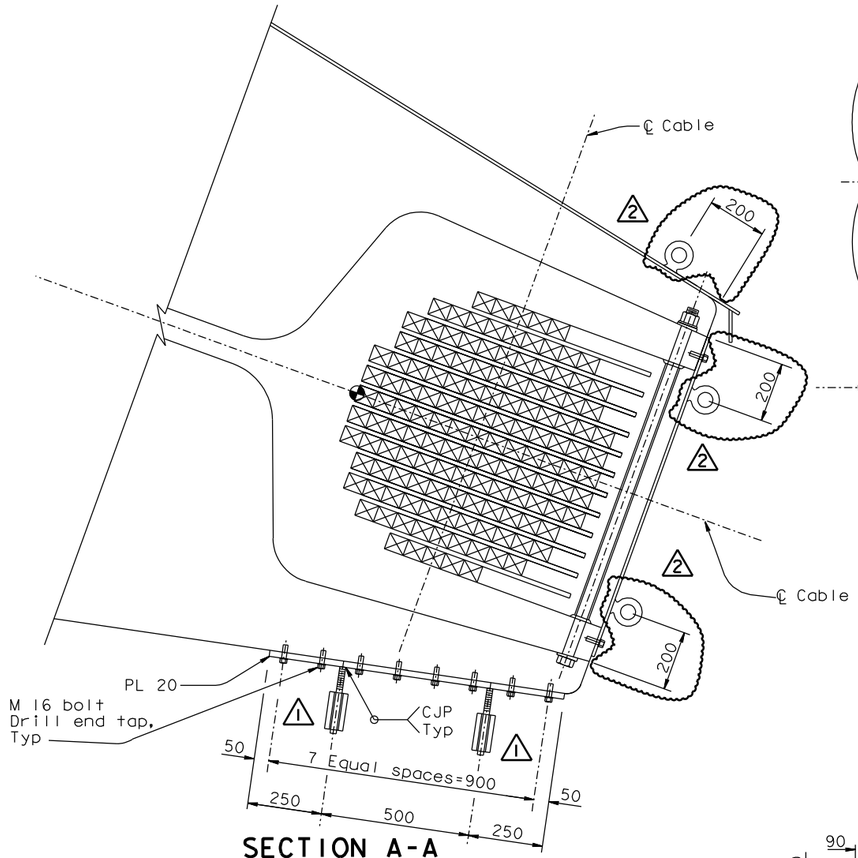

SECTION A-A
1:10

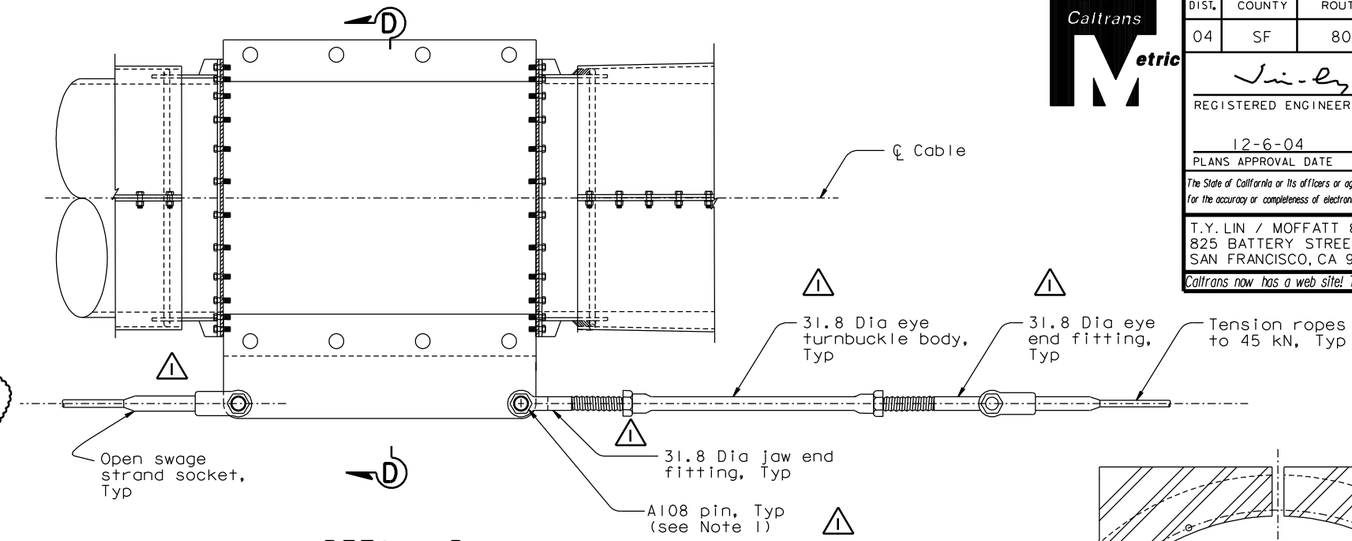

DETAIL D (Detail C similar)
1:10

MARK	DATE	DESCRIPTIONS	BY	CH'D	CCO#
2	06/22/07	WELDED PADEYES	NV	TH	41
1	04/20/07	WEST ANCHORAGE ACCESS DETAILS	GB	TH	28

REVISIONS

CONTRACT CHANGE ORDER NO. _____
SHEET ____ OF ____

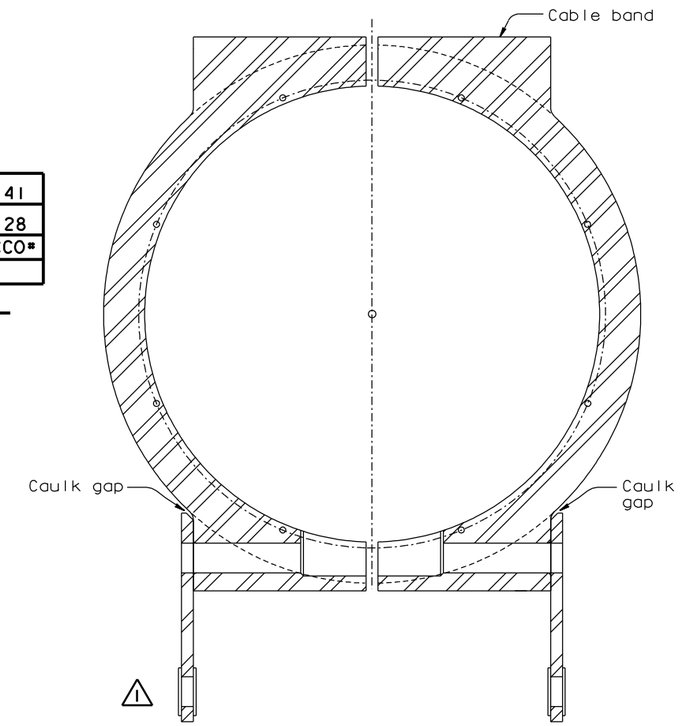

SECTION D-D
1:5

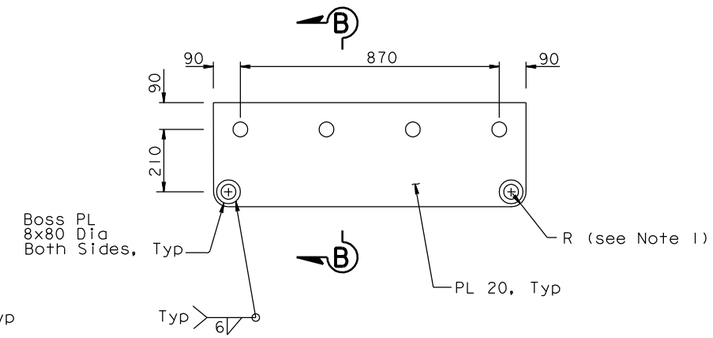

CABLE BAND PLATE ASSEMBLY DETAIL
1:10

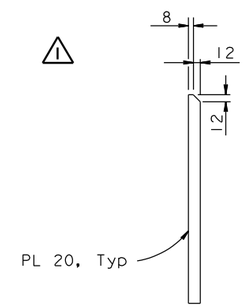

SECTION B-B
1:5

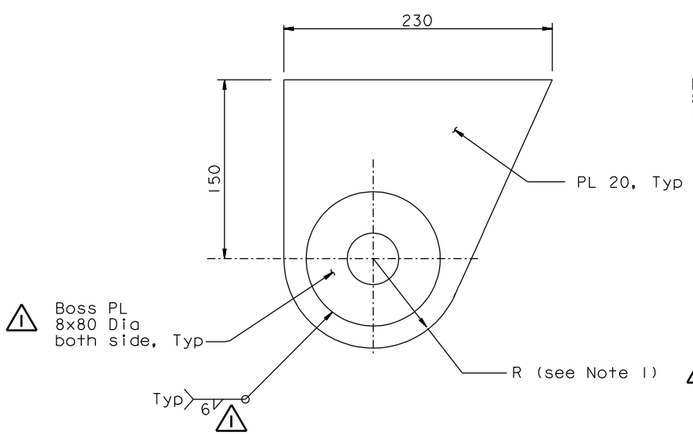

ANCHOR PLATE ASSEMBLY DETAIL
1:2.5

NOTES:

1. For pin details see "Cable Handrope Details No.2" sheet.

ALL DIMENSIONS ARE IN MILLIMETERS UNLESS OTHERWISE SHOWN

R. Valizadeh/V. Toan/Y.L./W.L./F.C.
DESIGN OVERSIGHT
Roya Valizadeh / Vong Toan / Y. Liu
SIGN OFF DATE 06/22/07

	BY	CHECKED
DESIGN	T. Ho	N. Vo
DETAILS	J. Sun	N. Vo
QUANTITIES	T. Ho	N. Vo

PREPARED FOR THE STATE OF CALIFORNIA DEPARTMENT OF TRANSPORTATION

R. Manzanarez
PROJECT ENGINEER

BRIDGE NO. 34-0006L/R
KILOMETER POST 13.2/13.9

SAN FRANCISCO OAKLAND BAY BRIDGE
EAST SPAN SEISMIC SAFETY PROJECT
SELF-ANCHORED SUSPENSION BRIDGE
(SUPERSTRUCTURE & TOWER)

WEST ANCHORAGE ACCESS DETAILS NO. 3

Rev. Date: 5-18-98

ORIGINAL SCALE IN MILLIMETERS FOR REDUCED PLANS 0 10 20 30 40 50 60 70 80 90 100

CU 04
EA 0120F1

DISREGARD PRINTS BEARING EARLIER REVISION DATES

REVISION DATES (PRELIMINARY STAGE ONLY) 08/02/99 05/31/01 04/08/02 07/01/02 12/18/02 09/06/04

SHEET 495R2 OF

FILE => I:\bb\04-0120F1\sas\contract plans and cco\cco\in progress\cco#41\dgn\akacc02e.dgn

USERNAME => ptrom DATE PLOTTED => 29 JUN 2007 TIME PLOTTED => 09:52:26

100 % PS&E