DIST.	COUNTY	ROUTE	KILOMETER POST TOTAL PROJECT	SHEET NO.	TOTAL SHEETS
04	SF	80	13.2/13.9	950R2	1204

REGISTERED ENGINEER - CIVIL

12-6-04

PLANS APPROVAL DATE

REGISTERED PROFESSIONAL ENGINEER Marwan N. Nader No. C 054426 Exp. 12/31/09 CIVIL STATE OF CALIFORNIA

The State of California or its officers or agents shall not be responsible for the accuracy or completeness of electronic copies of this plan sheet.

T.Y. LIN / MOFFATT & NICHOL
825 BATTERY STREET
SAN FRANCISCO, CA 94111

To get to the web site, go to: http://www.dot.ca.gov

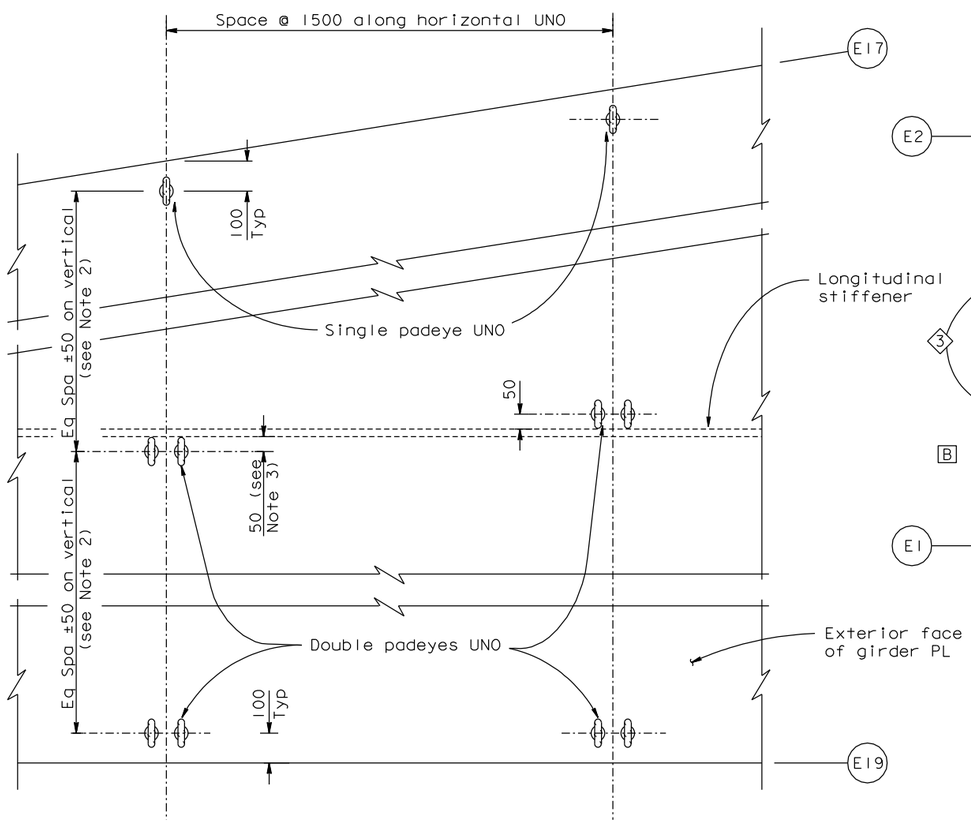

DETAIL B

1:10

(Only one stiffener shown for clarity)

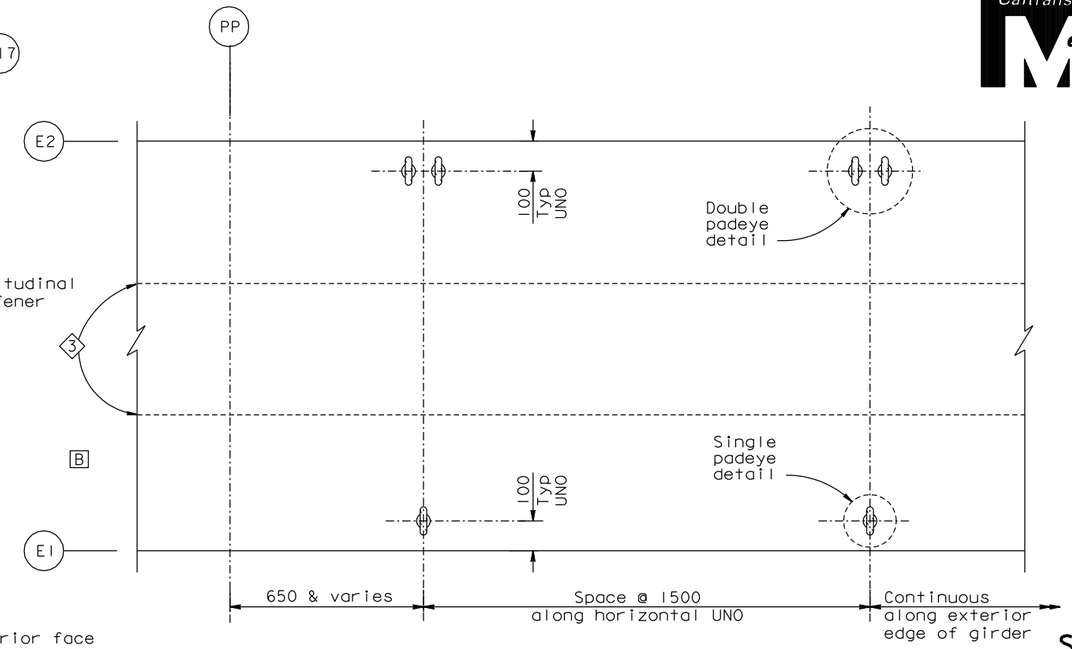

DETAIL A

1:10

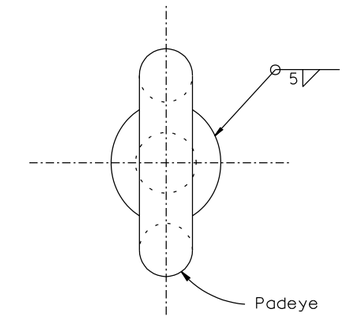

SINGLE PADEYE DETAIL

1:1.25

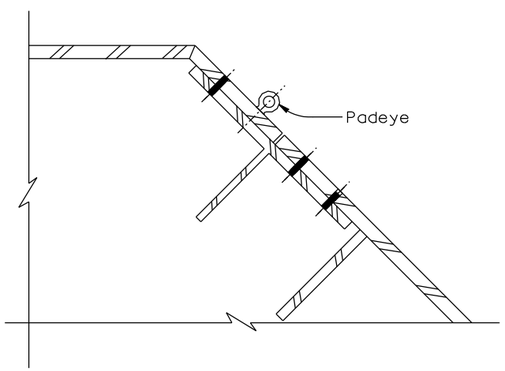

PADEYE AT ARCHITECTURAL SPLICE DETAIL

1:5

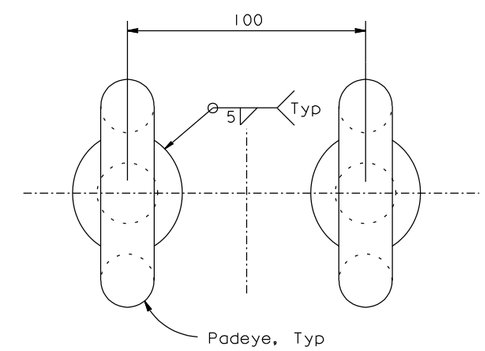

DOUBLE PADEYE DETAIL

1:1.25

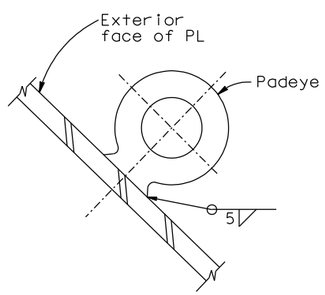

PADEYE AT BIKEPATH DETAIL

1:2.5

(Counterweight detail similar)

(Typical Welded Padeye)

NOTES:

1. Padeyes shall be Crosby size No.4 or equivalent, with a 25 mm diameter center hole.
2. Locate padeye bolt centers to be 50 mm from face of nearest shown longitudinal stiffener.
3. Padeye locations shall be shifted to avoid conflict with structural and drainage components and submitted for approval by the Engineer.
4. The padeye shall remain elastic under a tension and shear force of 22.2 kN. These forces shall not be considered simultaneous. 2

REQUESTS FOR INFORMATION NOT ADDRESSED IN THIS CCO REMAIN IN FORCE

MARK	DATE	DESCRIPTIONS	BY	CH'D	CCO#
2	04/30/08	WELDED PADEYES	NV	MN	41
1	06/22/07	WELDED PADEYES	NV	MN	41

REVISIONS

CONTRACT CHANGE ORDER NO. ____
SHEET ____ OF ____

ALL DIMENSIONS ARE IN MILLIMETERS UNLESS OTHERWISE SHOWN

R. Valizadeh/V. Toan/Y.L./W.L./F.C.
DESIGN OVERSIGHT
Roya Valizadeh / Vong Toan / Y. Liu
SIGN OFF DATE 04/30/08

DESIGN	BY M. Nader	CHECKED N. Vo	
DETAILS	BY M. Roberts	CHECKED N. Vo	
QUANTITIES	BY M. Roberts	CHECKED N. Vo	

PREPARED FOR THE STATE OF CALIFORNIA DEPARTMENT OF TRANSPORTATION

R. Manzanarez
PROJECT ENGINEER

BRIDGE NO. 34-0006L/R
KILOMETER POST 13.2/13.9

SAN FRANCISCO OAKLAND BAY BRIDGE
EAST SPAN SEISMIC SAFETY PROJECT
SELF-ANCHORED SUSPENSION BRIDGE

GIRDER ACCESS DETAILS NO. 10

Rev. Date: 5-18-98

ORIGINAL SCALE IN MILLIMETERS FOR REDUCED PLANS 0 10 20 30 40 50 60 70 80 90 100

CU 04
EA 0120F1

DISREGARD PRINTS BEARING EARLIER REVISION DATES

REVISION DATES (PRELIMINARY STAGE ONLY) 04/08/02 07/01/02 12/19/02

SHEET 533R2 OF

FILE => I:\bb\04-012001\sas\contract plans and cco\cco\in progress\cco#41\update 4-30-08\dgn\akacc10b.dgn

USERNAME => ptom DATE PLOTTED => 30 APR 2008 TIME PLOTTED => 15:55:45

100% PS&E