DIST.	COUNTY	ROUTE	KILOMETER POST TOTAL PROJECT	SHEET NO.	TOTAL SHEETS
04	SF	80	13.2/13.9	912R2	1204

Caltrans Metric

REGISTERED ENGINEER - CIVIL

12-6-04
PLANS APPROVAL DATE

Tien Hung Ho
No. C 43990
Exp. 06/30/09
CIVIL
REGISTERED PROFESSIONAL ENGINEER
STATE OF CALIFORNIA

The State of California or its officers or agents shall not be responsible for the accuracy or completeness of electronic copies of this plan sheet.

T.Y. LIN / MOFFATT & NICHOL
825 BATTERY STREET
SAN FRANCISCO, CA 94111

Caltrans now has a web site! To get to the web site, go to: http://www.dot.ca.gov

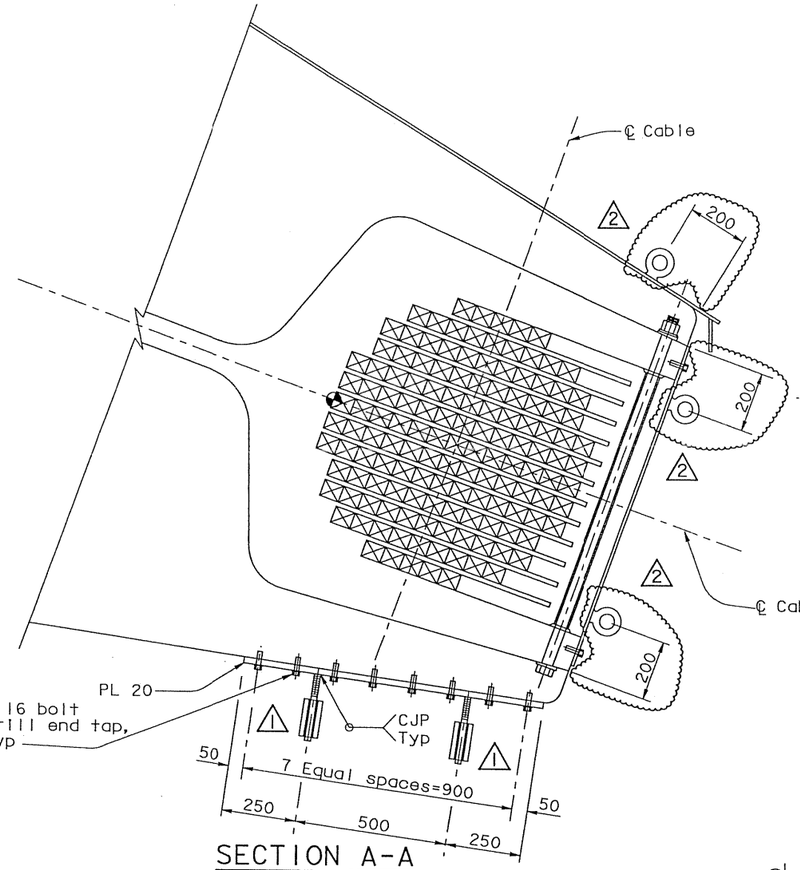

SECTION A-A
1:10

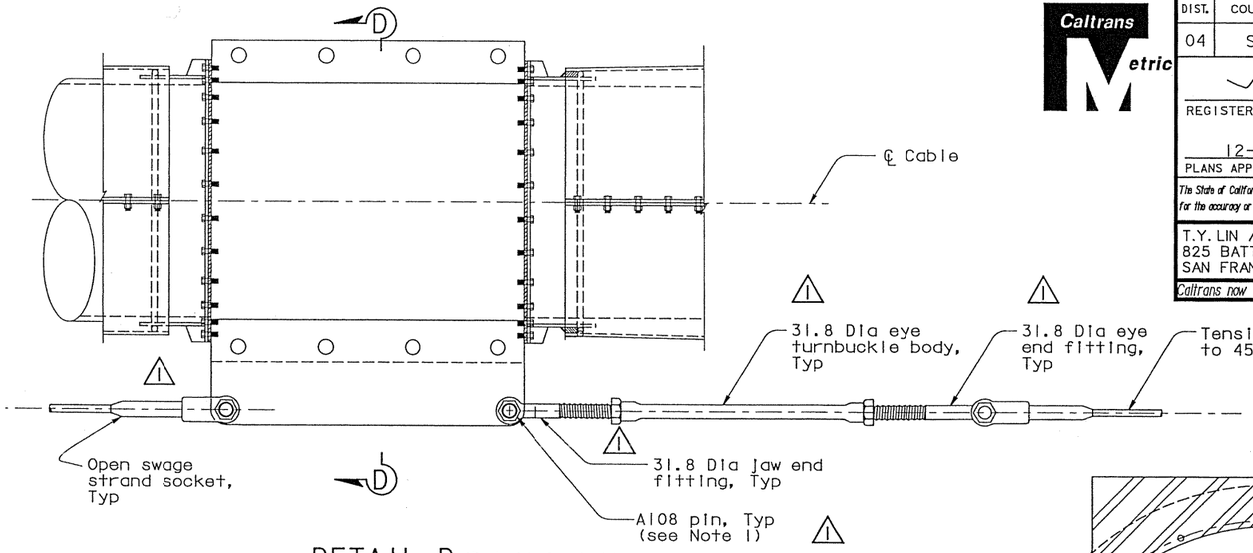

DETAIL D (Detail C similar)
1:10

MARK	DATE	REVISIONS	BY	CH'D	CCO#
2	06/22/07	WELDED PADEYES	NV	TH	41
1	04/20/07	WEST ANCHORAGE ACCESS DETAILS	GB	TH	28

CONTRACT CHANGE ORDER NO. ____
SHEET ____ OF ____

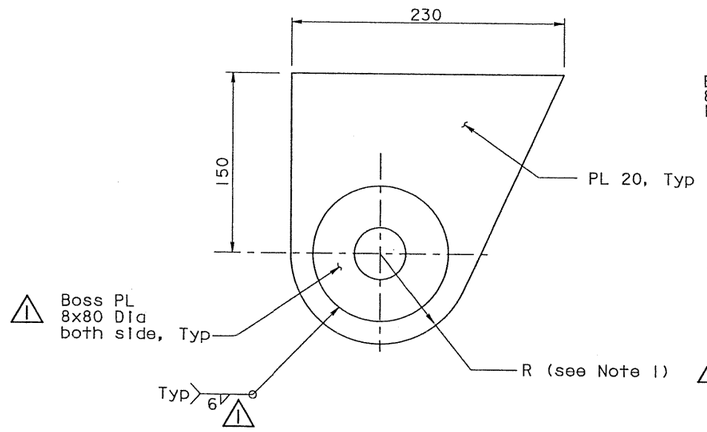

ANCHOR PLATE ASSEMBLY DETAIL
1:2.5

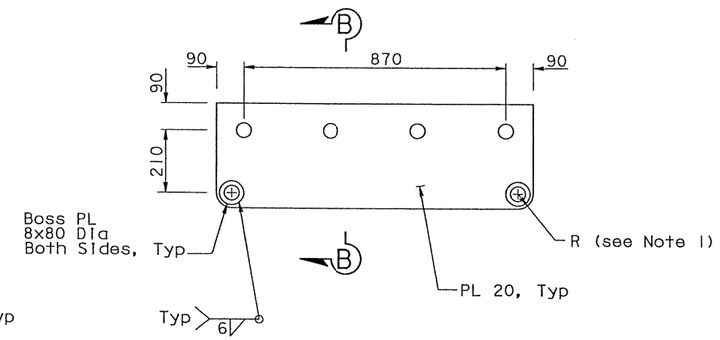

CABLE BAND PLATE ASSEMBLY DETAIL
1:10

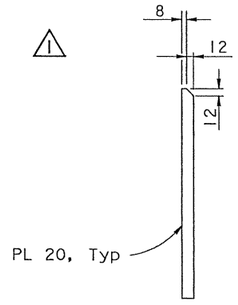

SECTION B-B
1:5

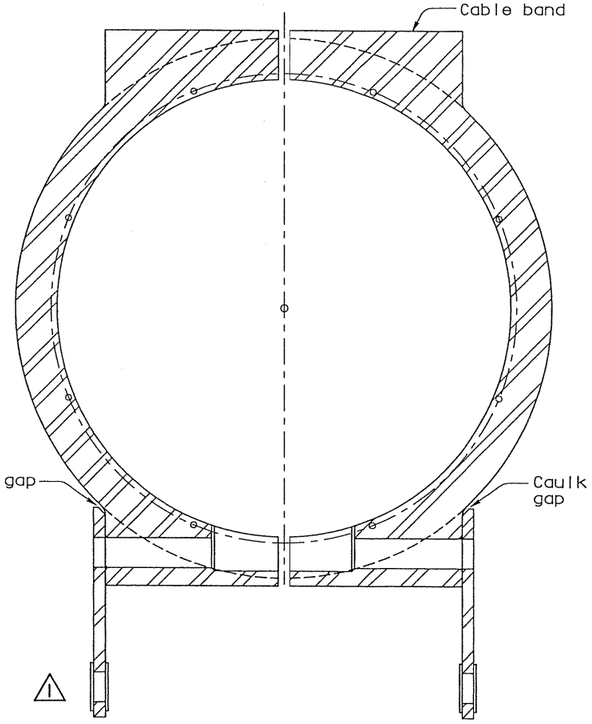

SECTION D-D
1:5

NOTES:

1. For pin details see "Cable Handrope Details No. 2" sheet.

100 % PS&E

ALL DIMENSIONS ARE IN MILLIMETERS UNLESS OTHERWISE SHOWN

R. Vallzadeh/V. Toan/Y.L./W.L./F.C.
DESIGN OVERSIGHT
SIGN OFF DATE 06/22/07

	BY	CHECKED
DESIGN	T. Ho	N. Vo
DETAILS	J. Sun	N. Vo
QUANTITIES	T. Ho	N. Vo

PREPARED FOR THE
STATE OF CALIFORNIA
DEPARTMENT OF TRANSPORTATION

R. Manzanarez
PROJECT ENGINEER

BRIDGE NO. 34-0006L/R
KILOMETER POST 13.2/13.9

SAN FRANCISCO OAKLAND BAY BRIDGE
EAST SPAN SEISMIC SAFETY PROJECT
SELF-ANCHORED SUSPENSION BRIDGE
(SUPERSTRUCTURE & TOWER)

WEST ANCHORAGE ACCESS DETAILS NO. 3

Rev. Date: 5-18-98

ORIGINAL SCALE IN MILLIMETERS FOR REDUCED PLANS 0 10 20 30 40 50 60 70 80 90 100

CU 04
EA 0120F1

DISREGARD PRINTS BEARING EARLIER REVISION DATES →

REVISION DATES (PRELIMINARY STAGE ONLY): 09/26/99 | 05/21/01 | 04/26/02 | 07/01/02 | 12/19/02 | 09/06/04

SHEET 495R2 OF

FILE => I:\bb\04-0120I\sas\contract plans and cco\cco\In progress\cco#41\akaoc02e.dgn

DATE PLOTTED: 11-AUG-2009
USERNAME => vong

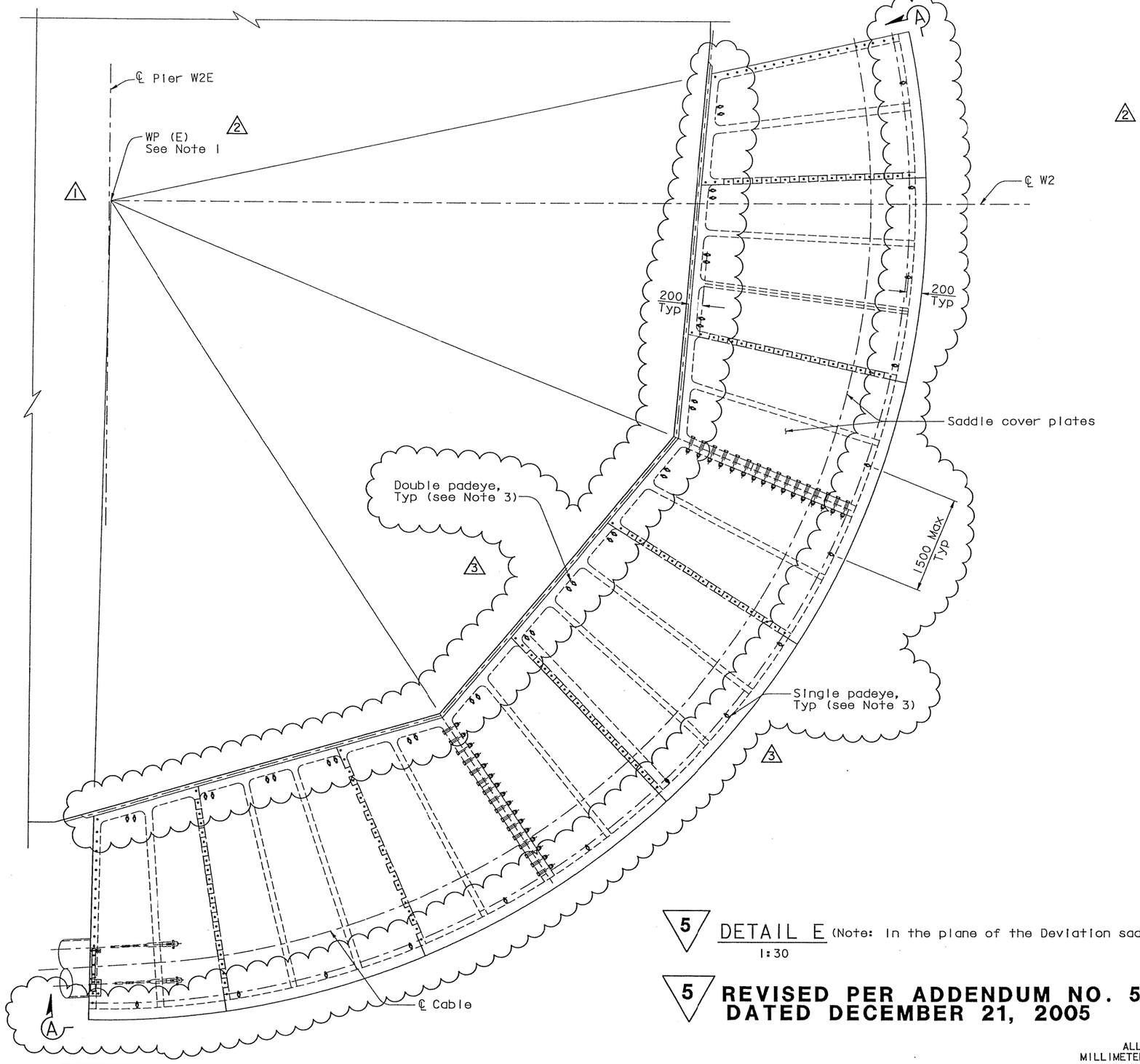

5 DETAIL E (Note: In the plane of the Deviation saddle)
1:30

5 **REVISED PER ADDENDUM NO. 5 DATED DECEMBER 21, 2005**

Caltrans Metric

DIST.	COUNTY	ROUTE	KILOMETER POST TOTAL PROJECT	SHEET NO.	TOTAL SHEETS
04	SF	80	13.2/13.9	913R3	1204

REGISTERED ENGINEER - CIVIL

12-6-04
PLANS APPROVAL DATE

REGISTERED PROFESSIONAL ENGINEER
Tien Hung Ho
No. C 43990
Exp. 06/30/09
CIVIL
STATE OF CALIFORNIA

The State of California or its officers or agents shall not be responsible for the accuracy or completeness of electronic copies of this plan sheet.

T.Y. LIN / MOFFATT & NICHOL
825 BATTERY STREET
SAN FRANCISCO, CA 94111

Caltrans now has a web site! To get to the web site, go to: http://www.dot.ca.gov

MARK	DATE	DESCRIPTIONS	BY	CH'D	CCO*
		REVISIONS			
3	06/22/07	WELDED PADEYES	NV	TH	41
2	04/20/07	WEST ANCHORAGE ACCESS DETAILS	GB	TH	28
1	01/31/07	WEST DEVIATION SADDLE GEOMETRY	PC	TH	15

1 NOTES:

1. WP(E) and WP(W) do not coincide with ℄ of Pier W2, ℄ Pier W2E nor ℄ Pier W2W.
2. For Section A-A see "West Anchorage Access Details No.5" sheet.
3. For double and single padeye details see "West Anchorage Access Details No.5" sheet.

100% PS&E

ALL DIMENSIONS ARE IN MILLIMETERS UNLESS OTHERWISE SHOWN

R. Vallzadeh/V. Toan/Y.L./W.L./F.C.
DESIGN OVERSIGHT
SIGN OFF DATE 06/22/07

	BY	CHECKED
DESIGN	T. Ho	N. Vo
DETAILS	J. Sun	N. Vo
QUANTITIES	T. Ho	N. Vo

PREPARED FOR THE STATE OF CALIFORNIA DEPARTMENT OF TRANSPORTATION

R. Manzanarez
PROJECT ENGINEER

BRIDGE NO. 34-0006L/R
KILOMETER POST 13.2/13.9

SAN FRANCISCO OAKLAND BAY BRIDGE
EAST SPAN SEISMIC SAFETY PROJECT
SELF-ANCHORED SUSPENSION BRIDGE
(SUPERSTRUCTURE & TOWER)

WEST ANCHORAGE ACCESS DETAILS NO. 4

Rev. Date: 5-18-98

ORIGINAL SCALE IN MILLIMETERS FOR REDUCED PLANS 0 10 20 30 40 50 60 70 80 90 100

CU 04
EA 0120F1

DISREGARD PRINTS BEARING EARLIER REVISION DATES →

REVISION DATES (PRELIMINARY STAGE ONLY): 05/31/01 | 04/08/02 | 07/01/02 | 12/18/02 | 09/08/04 | 12/01/05

SHEET 496R3 OF

FILE => I:\bb\04-0120O1\sas\contract plans and cco\cco\In progress\cco#41\akacc02f.dgn

ISSUANCE OF PLANS, DATED AUGUST 20, 2007

MARK	DATE	DESCRIPTIONS	BY	CH'D	CCO#
2	06/22/07	WELDED PADEYES	NV	TH	41
1	04/20/07	WEST ANCHORAGE ACCESS DETAILS	GB	TH	28

REVISIONS

CONTRACT CHANGE ORDER NO. ____
SHEET ____ OF ____

DIST.	COUNTY	ROUTE	KILOMETER POST TOTAL PROJECT	SHEET NO.	TOTAL SHEETS
04	SF	80	13.2/13.9	914R2	1204

Caltrans Metric

REGISTERED ENGINEER - CIVIL

12-6-04
PLANS APPROVAL DATE

REGISTERED PROFESSIONAL ENGINEER
Tien Hung Ho
No. C 43990
Exp. 06/30/09
CIVIL
STATE OF CALIFORNIA

The State of California or its officers or agents shall not be responsible for the accuracy or completeness of electronic copies of this plan sheet.

T.Y. LIN / MOFFATT & NICHOL
825 BATTERY STREET
SAN FRANCISCO, CA 94111

Caltrans now has a web site! To get to the web site, go to: http://www.dot.ca.gov

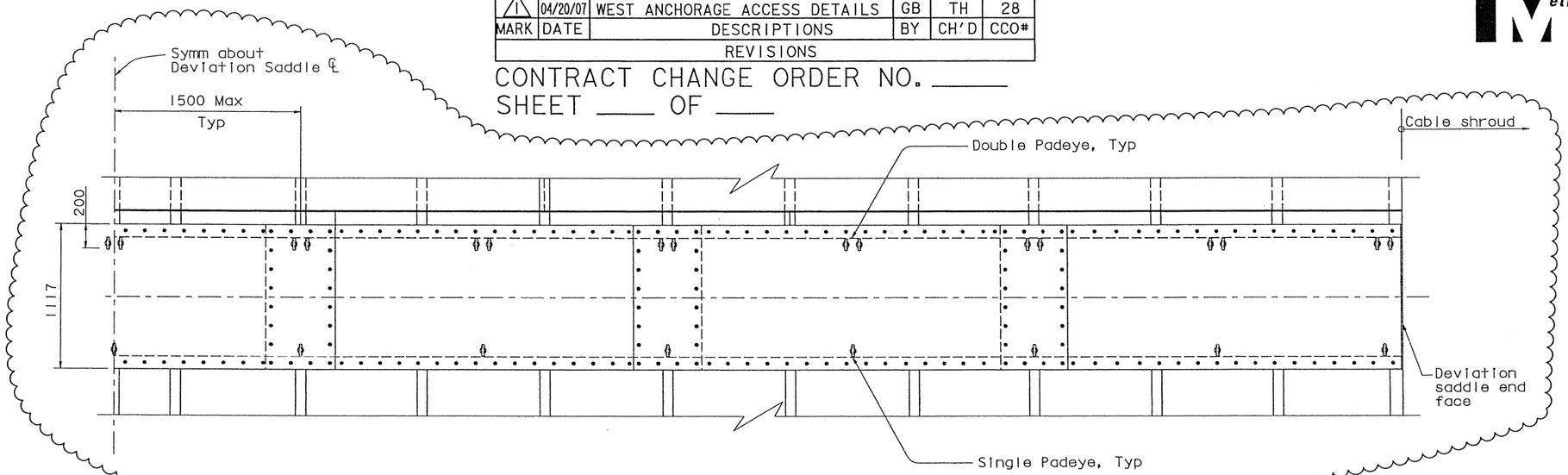

SECTION A-A
1:20

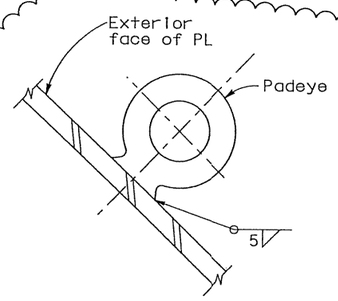

SECTION B-B
1:1.25

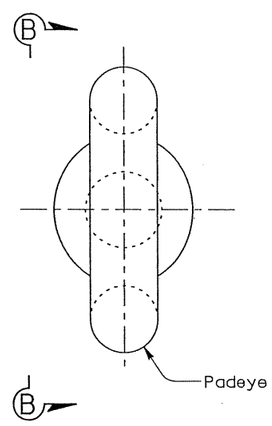

SINGLE PADEYE DETAIL
1:1.25

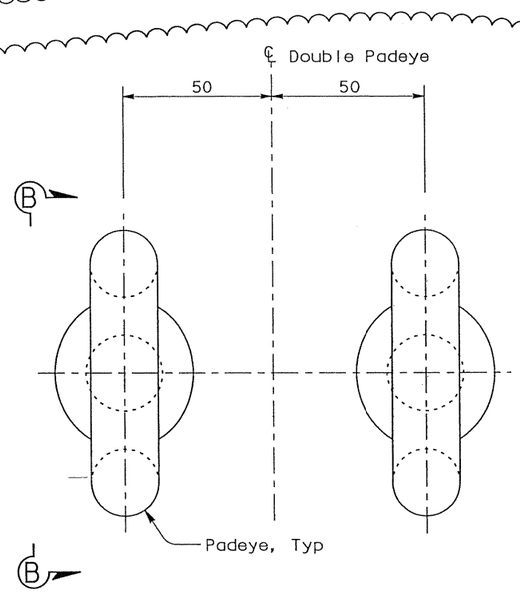

DOUBLE PADEYE DETAIL
1:1.25

ALL DIMENSIONS ARE IN MILLIMETERS UNLESS OTHERWISE SHOWN

SAN FRANCISCO OAKLAND BAY BRIDGE
EAST SPAN SEISMIC SAFETY PROJECT
SELF-ANCHORED SUSPENSION BRIDGE
(SUPERSTRUCTURE & TOWER)

WEST ANCHORAGE ACCESS DETAILS NO. 5

R. Vallzadeh/V. Toan/Y.L./W.L./F.C.
DESIGN OVERSIGHT
SIGN OFF DATE 06/22/07

	BY	CHECKED
DESIGN	T. Ho	N. Vo
DETAILS	J. Sun	N. Vo
QUANTITIES	T. Ho	N. Vo

PREPARED FOR THE STATE OF CALIFORNIA DEPARTMENT OF TRANSPORTATION

R. Manzanarez
PROJECT ENGINEER

BRIDGE NO. 34-0006L/R
KILOMETER POST 12.6/13.9

Rev. Date: 5-18-98

ORIGINAL SCALE IN MILLIMETERS FOR REDUCED PLANS 0 10 20 30 40 50 60 70 80 90 100

CU 04
EA 0120F1

DISREGARD PRINTS BEARING EARLIER REVISION DATES

REVISION DATES (PRELIMINARY STAGE ONLY) 05/31/01 04/26/02 07/01/02 12/19/02

SHEET 497R2 OF

FILE => I:\bb\04-012001\sas\contract plans and cco\cco\in progress\cco#41\akacc02g.dgn

100 % PS&E

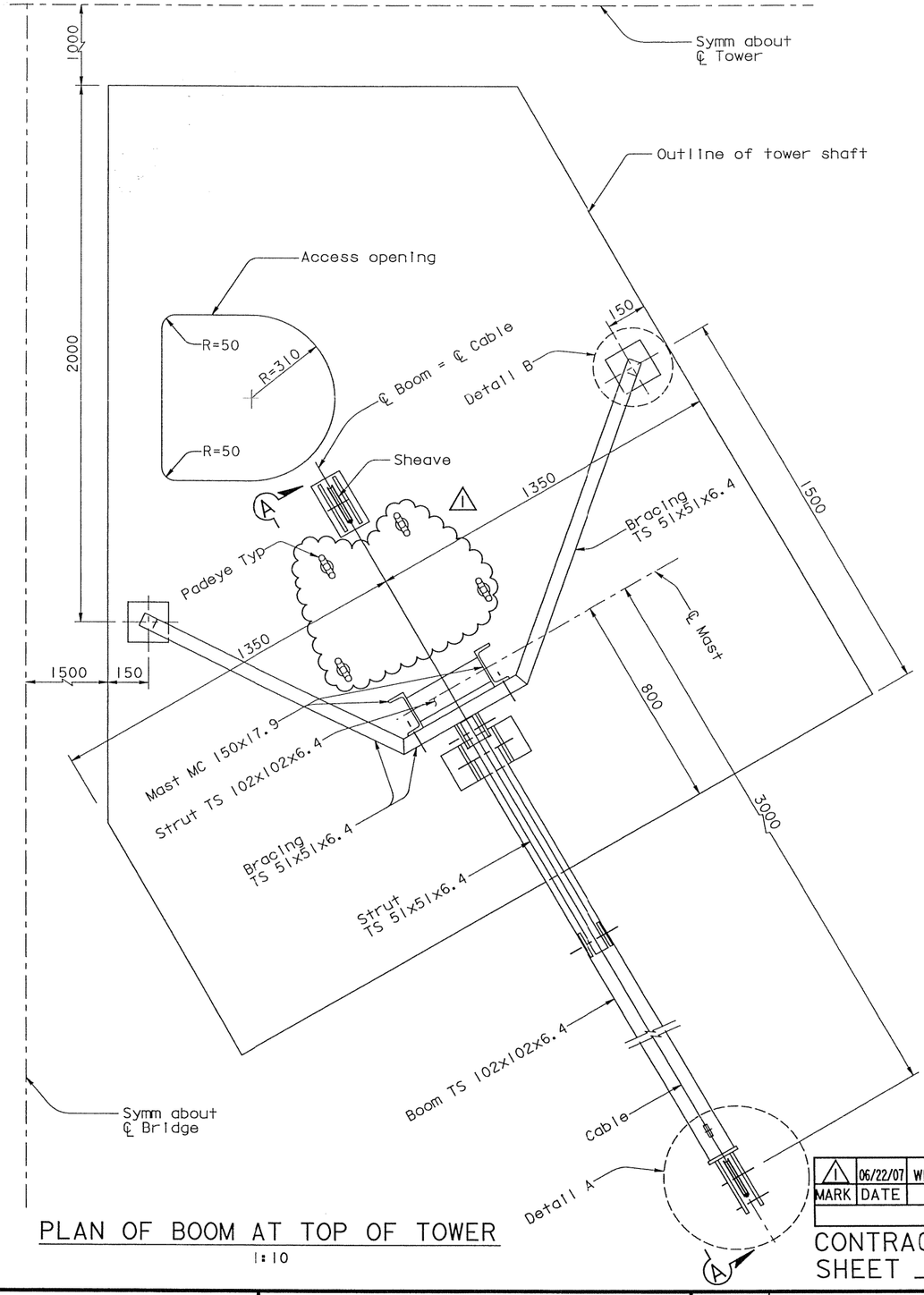

PLAN OF BOOM AT TOP OF TOWER

1:10

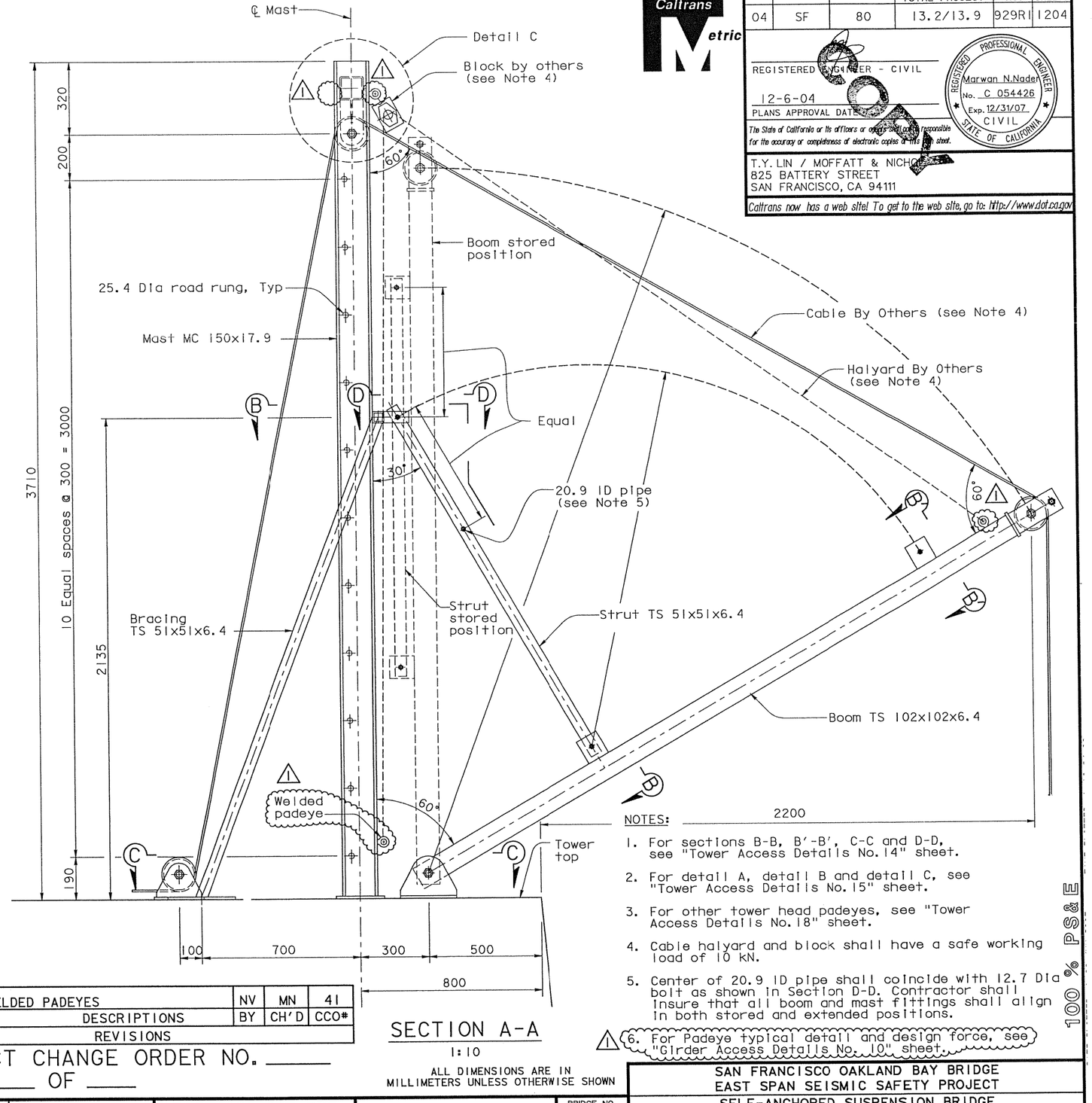

SECTION A-A

1:10

ALL DIMENSIONS ARE IN MILLIMETERS UNLESS OTHERWISE SHOWN

NOTES:

1. For sections B-B, B'-B', C-C and D-D, see "Tower Access Details No.14" sheet.
2. For detail A, detail B and detail C, see "Tower Access Details No.15" sheet.
3. For other tower head padeyes, see "Tower Access Details No.18" sheet.
4. Cable halyard and block shall have a safe working load of 10 kN.
5. Center of 20.9 ID pipe shall coincide with 12.7 Dia bolt as shown in Section D-D. Contractor shall insure that all boom and mast fittings shall align in both stored and extended positions.
6. For Padeye typical detail and design force, see "Girder Access Details No. 10" sheet.

100% PS&E

MARK	DATE	DESCRIPTIONS	BY	CH'D	CCO#
1	06/22/07	WELDED PADEYES	NV	MN	41

REVISIONS

CONTRACT CHANGE ORDER NO. ____
SHEET ___ OF ___

DIST.	COUNTY	ROUTE	KILOMETER POST TOTAL PROJECT	SHEET NO.	TOTAL SHEETS
04	SF	80	13.2/13.9	929R1	1204

REGISTERED ENGINEER - CIVIL

12-6-04
PLANS APPROVAL DATE

Marwan N.Nader
No. C 054426
Exp. 12/31/07
CIVIL
STATE OF CALIFORNIA

The State of California or its officers or agents shall not be responsible for the accuracy or completeness of electronic copies of this sheet.

T.Y. LIN / MOFFATT & NICHOL
825 BATTERY STREET
SAN FRANCISCO, CA 94111

Caltrans now has a web site! To get to the web site, go to: http://www.dot.ca.gov

R. Valizadeh/V. Toan/Y.L./W.L./F.C.	DESIGN	BY M. Nader	CHECKED N. Vo
DESIGN OVERSIGHT	DETAILS	BY G. Baker	CHECKED N. Vo
SIGN OFF DATE 06/22/07	QUANTITIES	BY G. Baker	CHECKED N. Vo

PREPARED FOR THE STATE OF CALIFORNIA
DEPARTMENT OF TRANSPORTATION

R. Manzanarez
PROJECT ENGINEER

BRIDGE NO. 34-0006L/R
KILOMETER POST 13.2/13.9

SAN FRANCISCO OAKLAND BAY BRIDGE
EAST SPAN SEISMIC SAFETY PROJECT
SELF-ANCHORED SUSPENSION BRIDGE
(SUPERSTRUCTURE & TOWER)

TOWER ACCESS DETAILS NO. 13

Rev. Date: 5-18-98

ORIGINAL SCALE IN MILLIMETERS FOR REDUCED PLANS 0 10 20 30 40 50 60 70 80 90 100

CU 04
EA 0120F1

DISREGARD PRINTS BEARING EARLIER REVISION DATES →

REVISION DATES (PRELIMINARY STAGE ONLY): 04/08/02 07/01/02 12/19/02

SHEET 512R1 OF

FILE => I:\bb\04-012001\sas\contract plans and cco\cco\In progress\cco#41\dgn\akacc13b.dgn

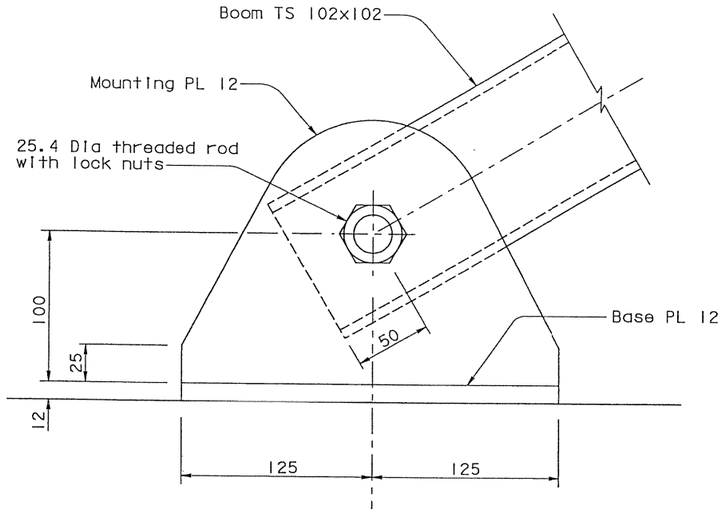

VIEW F-F
1:2

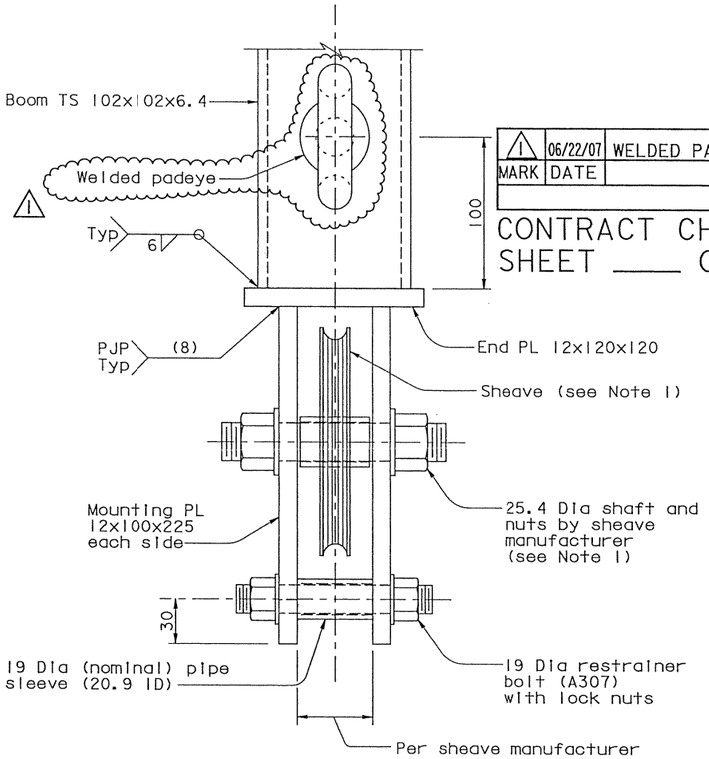

DETAIL A
1:2

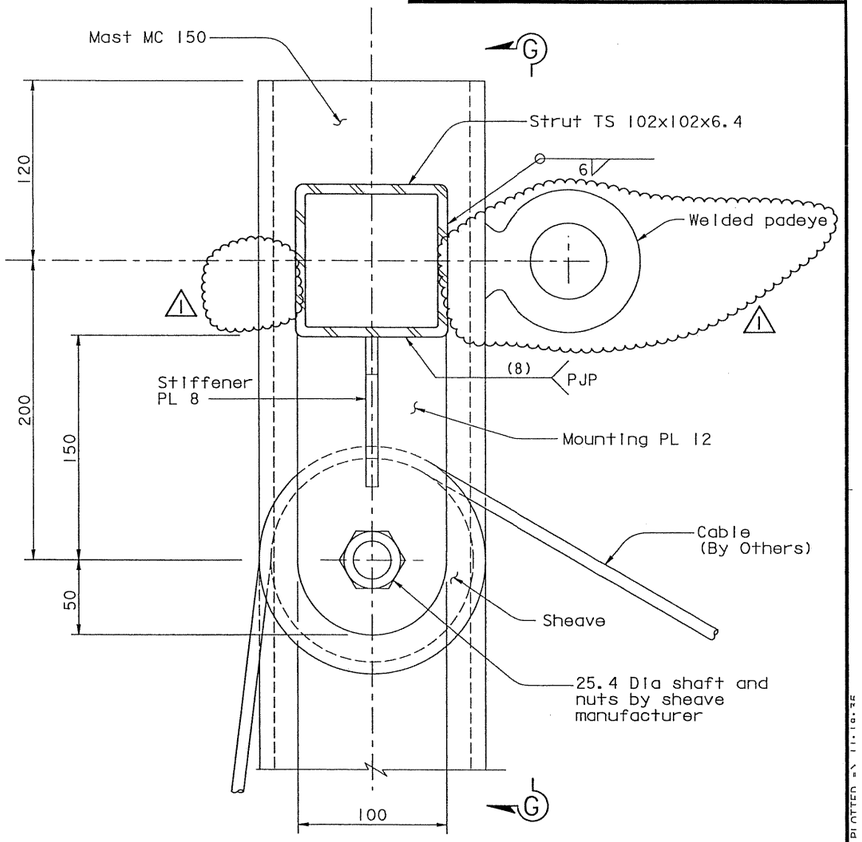

DETAIL C
1:2

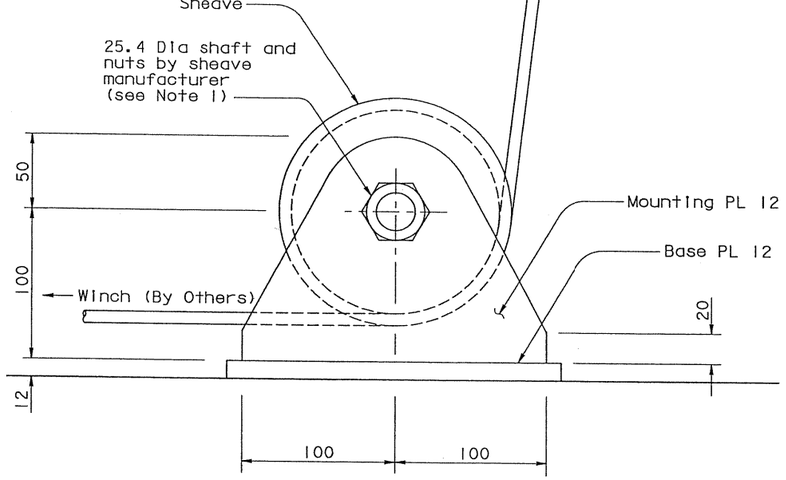

VIEW E-E
1:2

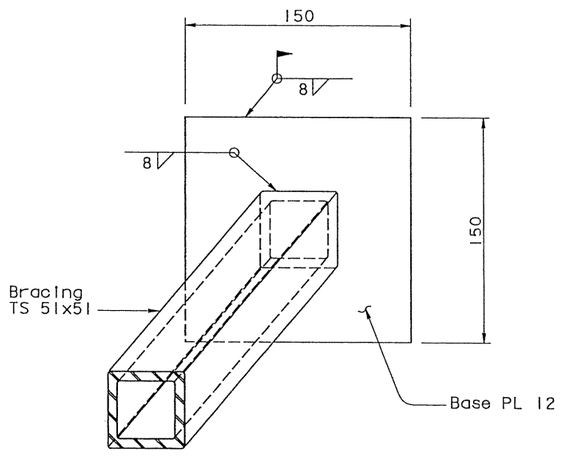

DETAIL B
1:2

NOTES:

1. Sheaves shall be 150 mm Dia with 10 mm groove and a minimum safe working load of 20 kN. Contractor shall provide fasteners for sheaves.
2. For View G-G, see "Tower Access Details No.16" sheet.
3. For padeye typical detail and design force, see "Girder Access Details No.10" sheet.

ALL DIMENSIONS ARE IN MILLIMETERS UNLESS OTHERWISE SHOWN

DIST.	COUNTY	ROUTE	KILOMETER POST TOTAL PROJECT	SHEET NO.	TOTAL SHEETS
04	SF	80	13.2/13.9	931R1	1204

REGISTERED ENGINEER - CIVIL
12-6-04
PLANS APPROVAL DATE
The State of California or its officers or agents shall not be responsible for the accuracy or completeness of electronic copies of this plan sheet.

PROFESSIONAL ENGINEER — Marwan N.Nader — No. C 54426 — Exp. 12/31/07 — CIVIL — STATE OF CALIFORNIA

MARK	DATE	DESCRIPTIONS	BY	CH'D	CCO#
		REVISIONS			
1	06/22/07	WELDED PADEYES	NV	MN	41

CONTRACT CHANGE ORDER NO. ____
SHEET ____ OF ____

T.Y. LIN / MOFFATT & NICHOL
825 BATTERY STREET
SAN FRANCISCO, CA 94111

Caltrans now has a web site! To get to the web site, go to: http://www.dot.ca.gov

DESIGN	BY M. Nader	CHECKED	N. Vo
DETAILS	BY G. Baker	CHECKED	N. Vo
QUANTITIES	BY G. Baker	CHECKED	N. Vo

R. Valizadeh/V. Toan/Y.L./W.L./F.C.
DESIGN OVERSIGHT
SIGN OFF DATE 06/22/07

PREPARED FOR THE STATE OF CALIFORNIA
DEPARTMENT OF TRANSPORTATION

R. Manzanarez
PROJECT ENGINEER

BRIDGE NO. 34-0006L/R
KILOMETER POST 13.2/13.9

SAN FRANCISCO OAKLAND BAY BRIDGE
EAST SPAN SEISMIC SAFETY PROJECT
SELF-ANCHORED SUSPENSION BRIDGE
(SUPERSTRUCTURE & TOWER)

TOWER ACCESS DETAILS NO. 15

Rev. Date: 5-18-98

ORIGINAL SCALE IN MILLIMETERS FOR REDUCED PLANS 0 10 20 30 40 50 60 70 80 90 100

CU 04
EA 0120F1

DISREGARD PRINTS BEARING EARLIER REVISION DATES

REVISION DATES (PRELIMINARY STAGE ONLY): 04/26/02 | 07/01/02 | 12/19/02

SHEET 514R1 OF

FILE => I:\bb\04-012001\sas\contract plans and cco\cco\In progress\cco#41\akacc155.dgn

100% PS&E

USERNAME => alishansk DATE PLOTTED => 22-JUN-2007 TIME PLOTTED => 11:16:42

DIST.	COUNTY	ROUTE	KILOMETER POST TOTAL PROJECT	SHEET NO.	TOTAL SHEETS
04	SF	80	13.2/13.9	932R1	1204

Caltrans Metric

REGISTERED ENGINEER - CIVIL

12-6-04

PLANS APPROVAL DATE

The State of California or its officers or agents shall not be responsible for the accuracy or completeness of electronic copies of this plan sheet.

REGISTERED PROFESSIONAL ENGINEER Marwan N.Nader No. C 54426 Exp. 12/31/07 CIVIL STATE OF CALIFORNIA

COPY

T.Y. LIN / MOFFATT & NICHOL
825 BATTERY STREET
SAN FRANCISCO, CA 94111

Caltrans now has a web site! To get to the web site, go to: http://www.dot.ca.gov

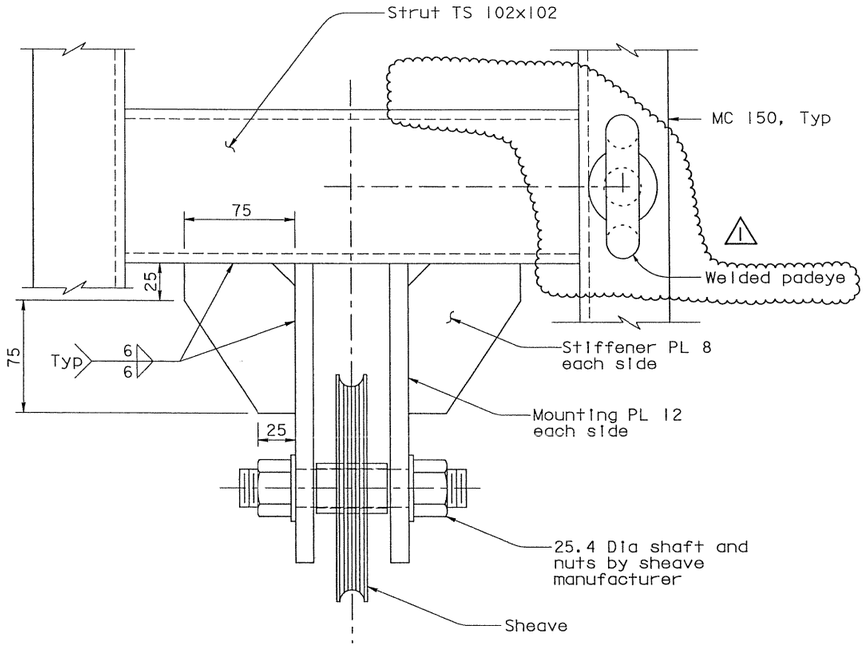

VIEW G-G
1:2

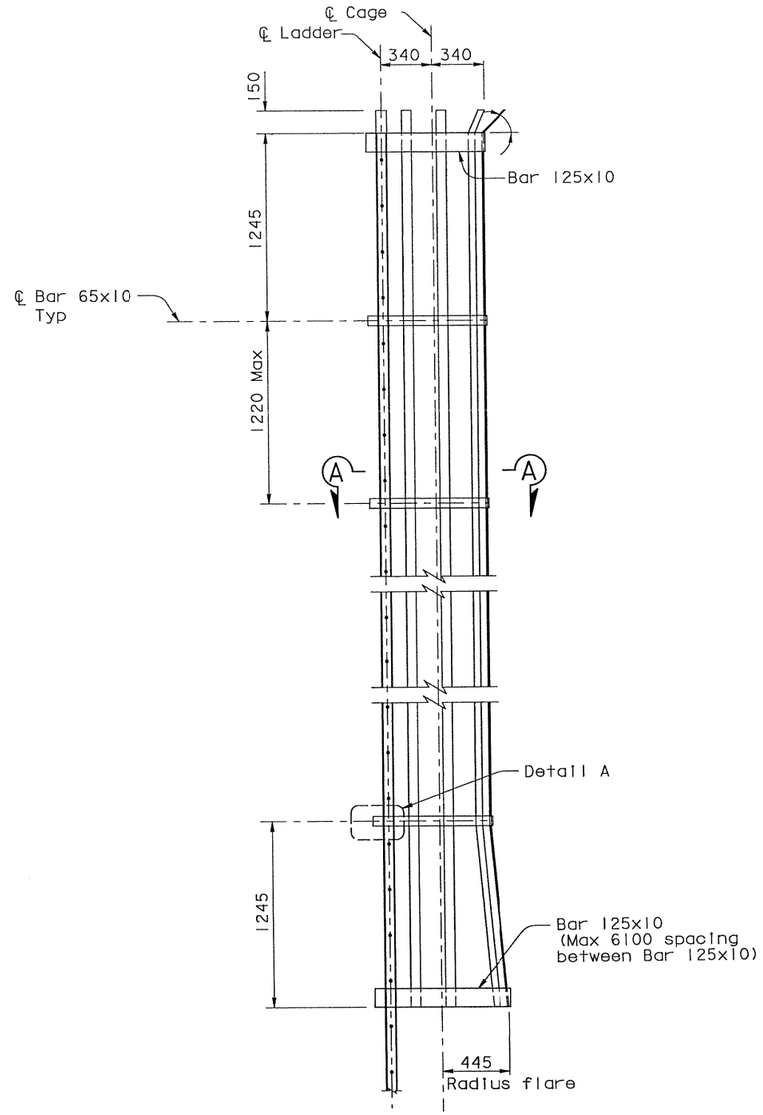

LADDER SAFETY CAGE ELEVATION
1:20

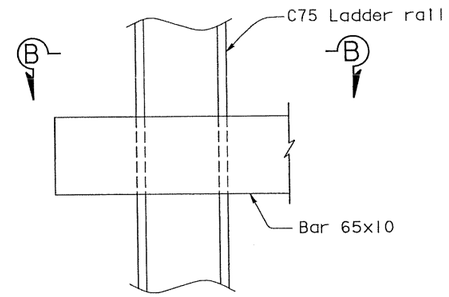

DETAIL A
1:2.5

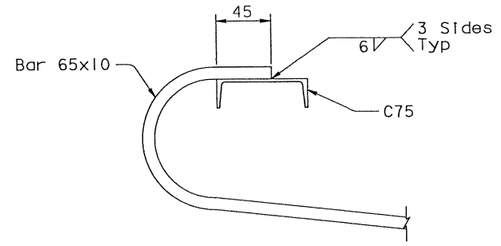

SECTION B-B
1:2.5

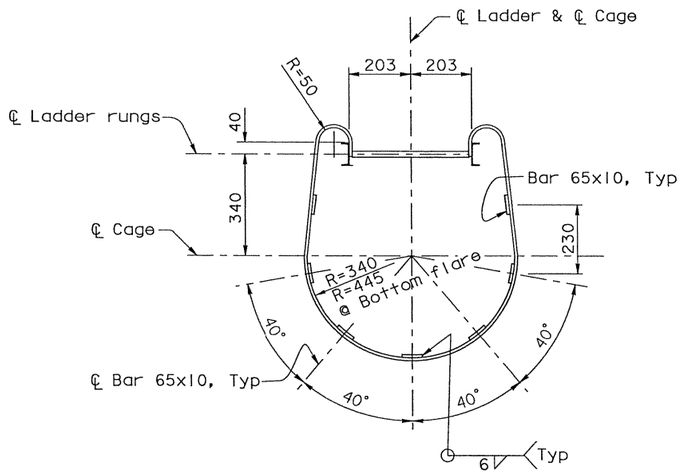

SECTION A-A (Rotated 90° clockwise)
1:10

NOTES:

1. For ladder details, see "Tower Access Details No. 7" sheet.
2. For Padeye typical details and design force, see "Girder Access Details No.10" sheet.

MARK	DATE	DESCRIPTIONS	BY	CH'D	CCO#
1	06/22/07	WELDED PADEYES	NV	MN	41

REVISIONS

CONTRACT CHANGE ORDER NO. _____
SHEET ____ OF ____

ALL DIMENSIONS ARE IN MILLIMETERS UNLESS OTHERWISE SHOWN

100 % PS&E

R. Valizadeh/V. Toan/Y.L./W.L./F.C.
DESIGN OVERSIGHT
SIGN OFF DATE 06/22/07

	BY	CHECKED
DESIGN	M. Nader	N. Vo
DETAILS	G. Baker	N. Vo
QUANTITIES	G. Baker	N. Vo

PREPARED FOR THE STATE OF CALIFORNIA DEPARTMENT OF TRANSPORTATION

R. Manzanarez
PROJECT ENGINEER

BRIDGE NO. 34-0006L/R
KILOMETER POST 13.2/13.9

SAN FRANCISCO OAKLAND BAY BRIDGE
EAST SPAN SEISMIC SAFETY PROJECT
SELF-ANCHORED SUSPENSION BRIDGE
(SUPERSTRUCTURE & TOWER)

TOWER ACCESS DETAILS NO. 16

Rev. Date: 5-18-98

ORIGINAL SCALE IN MILLIMETERS FOR REDUCED PLANS 0 10 20 30 40 50 60 70 80 90 100

CU 04
EA 0120F1

DISREGARD PRINTS BEARING EARLIER REVISION DATES

REVISION DATES (PRELIMINARY STAGE ONLY) 04/08/02 07/01/02 12/19/02

SHEET 515R1 OF

FILE => I:\bb\04-01200I\sas\contract plans and cco\cco\In progress\cco#41\dgn\akacc16b.dgn

DIST.	COUNTY	ROUTE	TOTAL PROJECT	NO.	SHEETS
04	SF	80	13.2/13.9	933R1	1204

REGISTERED ENGINEER - CIVIL

12-6-04
PLANS APPROVAL DATE

Marwan N. Nader
No. C 054426
Exp. 12/31/07
CIVIL
STATE OF CALIFORNIA

The State of California or its officers or agents shall not be responsible for the accuracy or completeness of electronic copies of this plan sheet.

T.Y. LIN / MOFFATT & NICHOL
825 BATTERY STREET
SAN FRANCISCO, CA 94111

Caltrans now has a web site! To get to the web site, go to: http://www.dot.ca.gov

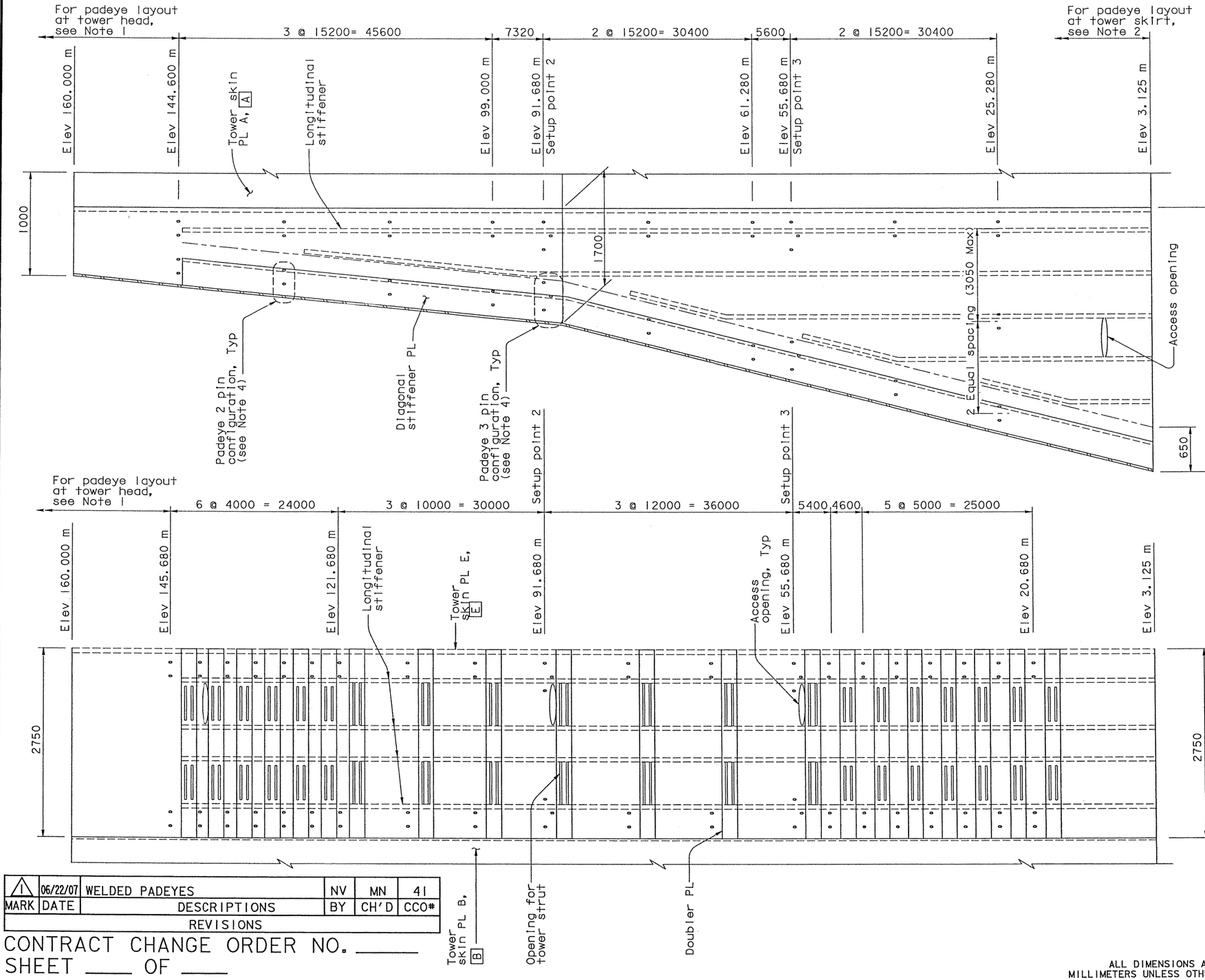

SECTION B-B
(Elevation of Skin Plate "B" Skin Plate "C" and "D" similar)
Horiz=1:30
Vert =1:300

SECTION A-A
(Elevation of Skin Plate "A" Skin Plate "E" similar)
Horiz=1:30
Vert =1:300

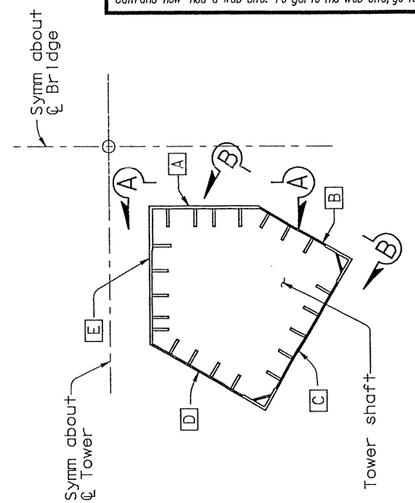

KEY PLAN

TABLE 1

Setup Points	Elevation	Pin Configuration
1	159.800 m	3
2	91.680 m	3
3	55.680 m	3
4	12.600 m	4

LEGEND:

D Tower skin PL designation

∘ Pad eye

NOTES:

1. For padeye layout at tower head, see "Tower Access Details No.18" sheet.
2. For padeye layout at tower skirt, see "Tower Access Details No.20" sheet.
3. For tower shaft details, see "Tower Shaft Details" sheets.
4. For padeye pin configuration details, see "Tower Access Details No.22" sheet.
5. For padeye typical detail and design force, see "Girder Access Details No.10" sheet.

PAD EYE LAYOUT AT TOWER SHAFTS

100% PS&E

MARK	DATE	DESCRIPTIONS	BY	CH'D	CCO#
1	06/22/07	WELDED PADEYES	NV	MN	41
		REVISIONS			

CONTRACT CHANGE ORDER NO. ____
SHEET ____ OF ____

ALL DIMENSIONS ARE IN MILLIMETERS UNLESS OTHERWISE SHOWN

R. Vallzadeh/V. Toan/Y.L./W.L./F.C.
DESIGN OVERSIGHT
SIGN OFF DATE 06/22/07

	BY	CHECKED
DESIGN	M. Nader	N. Vo
DETAILS	L. Rus	D. Harrison
QUANTITIES	L. Rus	D. Harrison

PREPARED FOR THE STATE OF CALIFORNIA
DEPARTMENT OF TRANSPORTATION

R. Manzanarez
PROJECT ENGINEER

BRIDGE NO. 34-0006L/R
KILOMETER POST 13.2/13.9

SAN FRANCISCO OAKLAND BAY BRIDGE
EAST SPAN SEISMIC SAFETY PROJECT
SELF-ANCHORED SUSPENSION BRIDGE
(SUPERSTRUCTURE & TOWER)

TOWER ACCESS DETAILS NO. 17

Rev. Date: 5-18-98

ORIGINAL SCALE IN MILLIMETERS FOR REDUCED PLANS 0 10 20 30 40 50 60 70 80 90 100

CU 04
EA 0120F1

DISREGARD PRINTS BEARING EARLIER REVISION DATES

REVISION DATES (PRELIMINARY STAGE ONLY): 04/08/02 01/01/02 12/19/02

SHEET 516R1 OF

FILE => I:\bb\04-012001\sas\contract plans and cco\cco\In progress\cco#41\akacc17.dgn

USERNAME => o1shanek DATE PLOTTED => 21 JUN 2007 TIME PLOTTED => 15:08:44

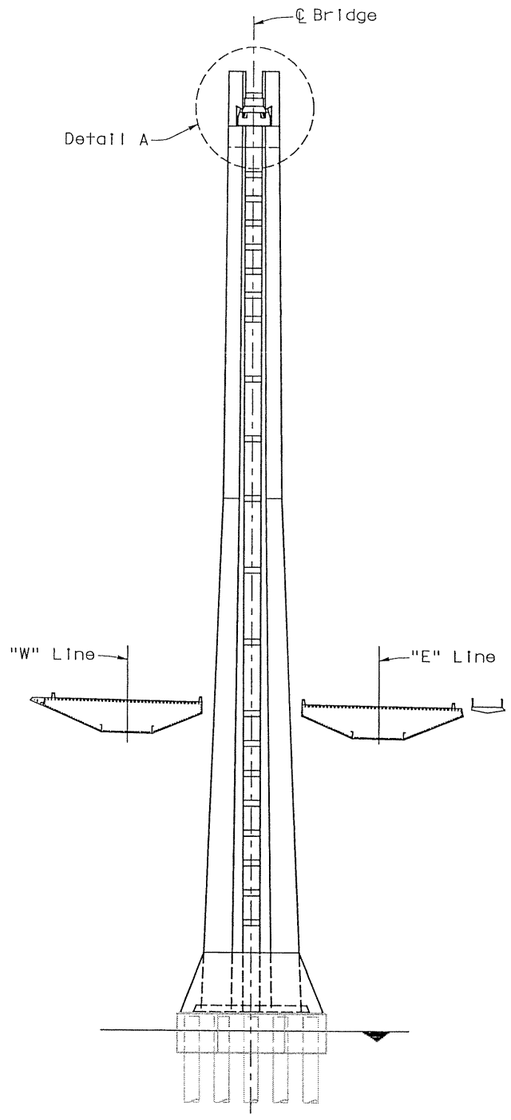

KEY ELEVATION
1:500

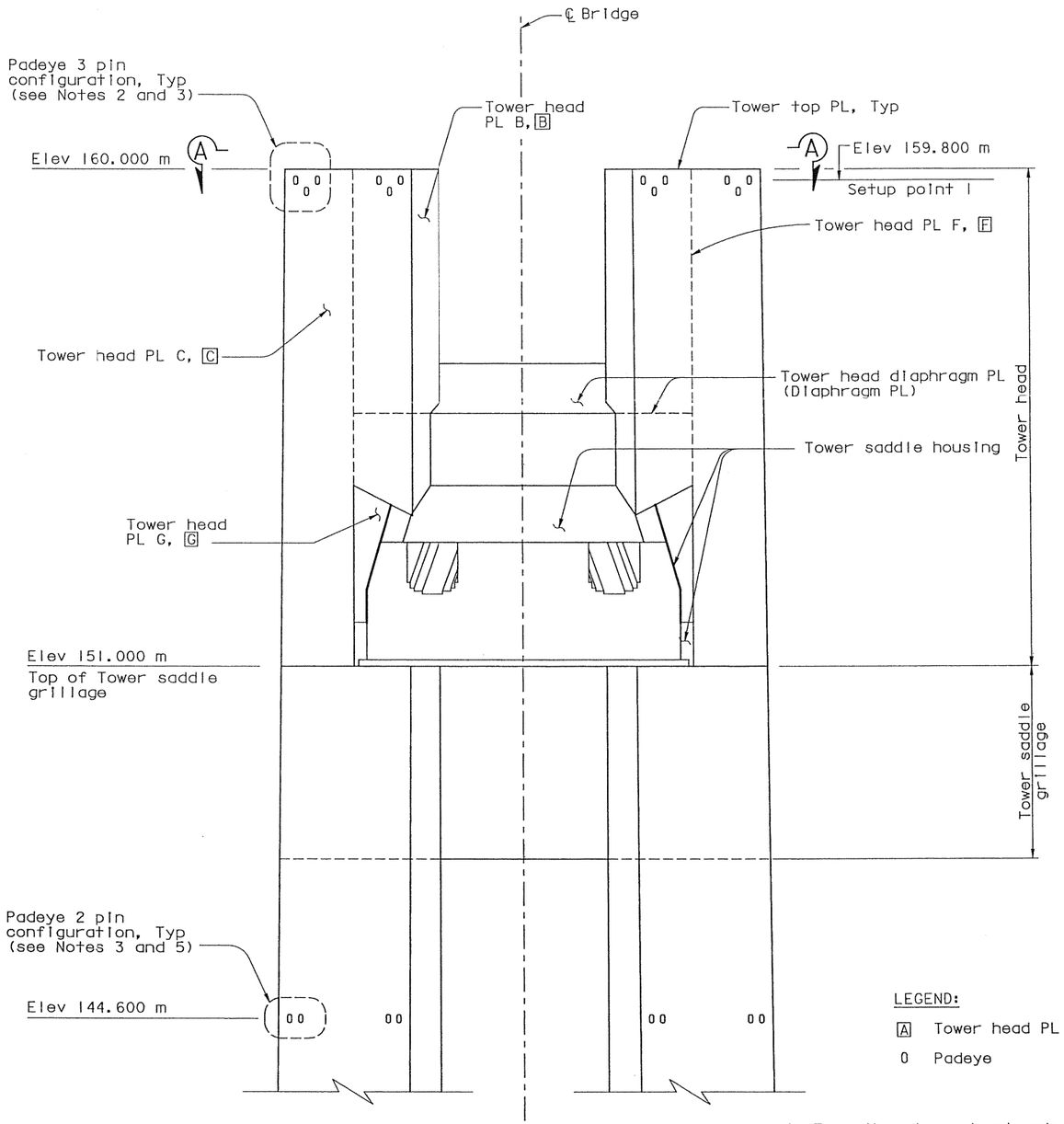

DETAIL A
1:50

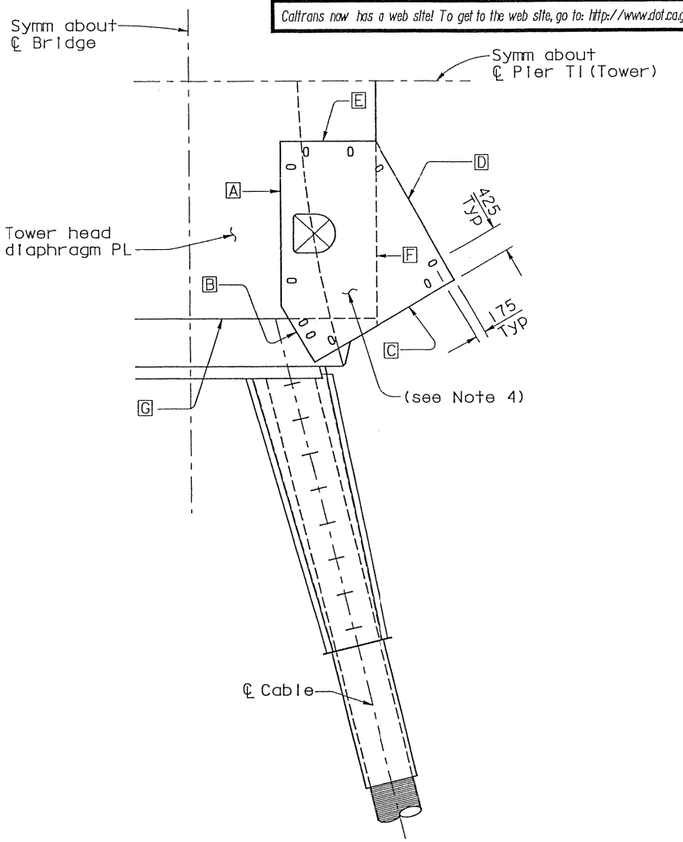

PLAN A-A
1:50
Padeye Layout at Tower Top Plate (see Note 1)

LEGEND:

A Tower head PL designation

0 Padeye

4. For other tower head padeyes, see "Tower Access Details No.13" sheet.
5. For padeye layouts on tower shafts, see "Tower Access Details No.17" sheet.
6. For padeye typical detail and design force, see "Girder Access Details No.10" sheet.

NOTES:

1. Padeye locations shall be shifted to avoid conflict with tower fog light, boom assembly, outrigger and submitted for approval by the Engineer.
2. Padeye 3 pin configuration shall be located at tower head plate A, B, C, D and E.
3. For padeye pin configuration details, see "Tower Access Details No.22" sheet.

MARK	DATE	DESCRIPTIONS	BY	CH'D	CCO#
1	06/22/07	WELDED PADEYES	NV	MN	41
REVISIONS					

PADEYE LAYOUT AT TOWER HEAD

(For clarity only the pad eyes on tower head PL C are shown)

ALL DIMENSIONS ARE IN MILLIMETERS UNLESS OTHERWISE SHOWN

DIST.	COUNTY	ROUTE	KILOMETER POST TOTAL PROJECT	SHEET NO.	TOTAL SHEETS
04	SF	80	13.2/13.9	934R1	1204

Caltrans Metric

REGISTERED ENGINEER - CIVIL

12-6-04
PLANS APPROVAL DATE

REGISTERED PROFESSIONAL ENGINEER — Marwan N. Nader — No. C 054426 — Exp. 12/31/07 — CIVIL — STATE OF CALIFORNIA

The State of California or its officers or agents shall not be responsible for the accuracy or completeness of electronic copies of this plan sheet.

T.Y. LIN / MOFFATT & NICHOL
825 BATTERY STREET
SAN FRANCISCO, CA 94111

Caltrans now has a web site! To get to the web site, go to: http://www.dot.ca.gov

R. Vallzadeh/V. Toan/Y.L./W.L./F.C.
DESIGN OVERSIGHT
SIGN OFF DATE 06/22/07

	BY	CHECKED
DESIGN	M. Nader	N. Vo
DETAILS	L. Rus	D. Harrison
QUANTITIES	L. Rus	D. Harrison

PREPARED FOR THE STATE OF CALIFORNIA
DEPARTMENT OF TRANSPORTATION

R. Manzanarez
PROJECT ENGINEER

BRIDGE NO. 34-0006L/R
KILOMETER POST 13.2/13.9

SAN FRANCISCO OAKLAND BAY BRIDGE
EAST SPAN SEISMIC SAFETY PROJECT
SELF-ANCHORED SUSPENSION BRIDGE
(SUPERSTRUCTURE & TOWER)

TOWER ACCESS DETAILS NO. 18

Rev. Date: 5-18-98

ORIGINAL SCALE IN MILLIMETERS FOR REDUCED PLANS 0 10 20 30 40 50 60 70 80 90 100

CU 04
EA 0120F1

DISREGARD PRINTS BEARING EARLIER REVISION DATES

REVISION DATES (PRELIMINARY STAGE ONLY): 04/06/02 | 07/01/02 | 12/19/02

SHEET 517R1 OF

FILE => I:\bb\04-01200\sas\con-ract plans and cco\cco\In progress\coo#41\dkacc18.dgn

100% PS&E

DISPLAY DATE: 6/22/2007

MARK	DATE	DESCRIPTIONS	BY	CH'D	CCO#
1	06/22/07	WELDED PADEYES	NV	MN	41
		REVISIONS			

CONTRACT CHANGE ORDER NO. _____
SHEET ____ OF ____

Caltrans Metric

DIST.	COUNTY	ROUTE	KILOMETER POST TOTAL PROJECT	SHEET NO.	TOTAL SHEETS
04	SF	80	13.2/13.9	935R	1204

REGISTERED ENGINEER - CIVIL

12-6-04
PLANS APPROVAL DATE

REGISTERED PROFESSIONAL ENGINEER
Marwan N. Nader
No. C 054426
Exp. 12/31/07
CIVIL
STATE OF CALIFORNIA

The State of California or the Department of Transportation shall not be responsible for the accuracy or completeness of any electronic copies of this plan sheet.

T.Y. LIN / MOFFATT & NICHOL
825 BATTERY STREET
SAN FRANCISCO, CA 941

Caltrans now has a web site! To get to the web site, go to: http://www.dot.ca.gov

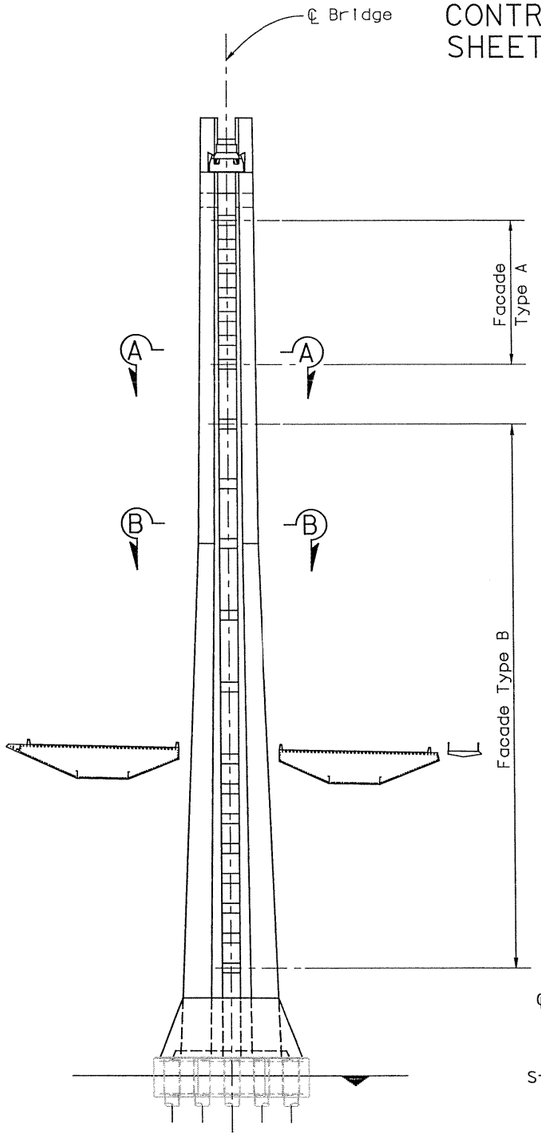

KEY ELEVATION
1:500

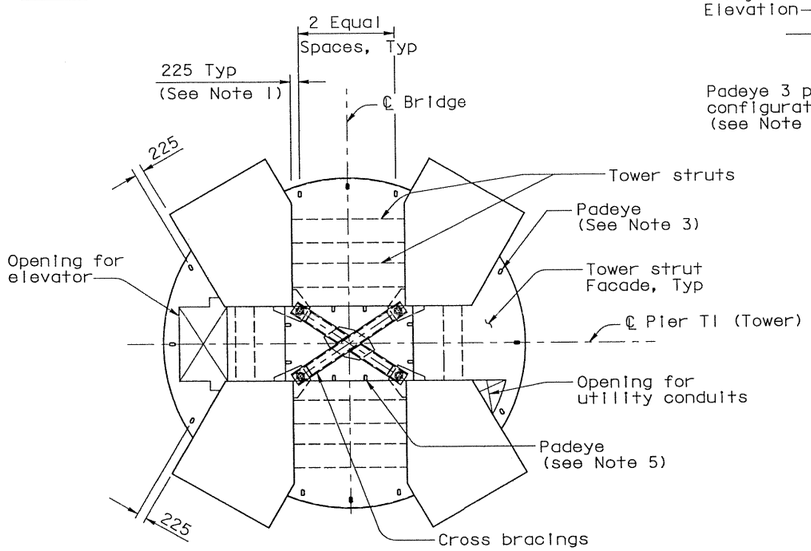

SECTION A-A
1:80
Strut Facade Type A

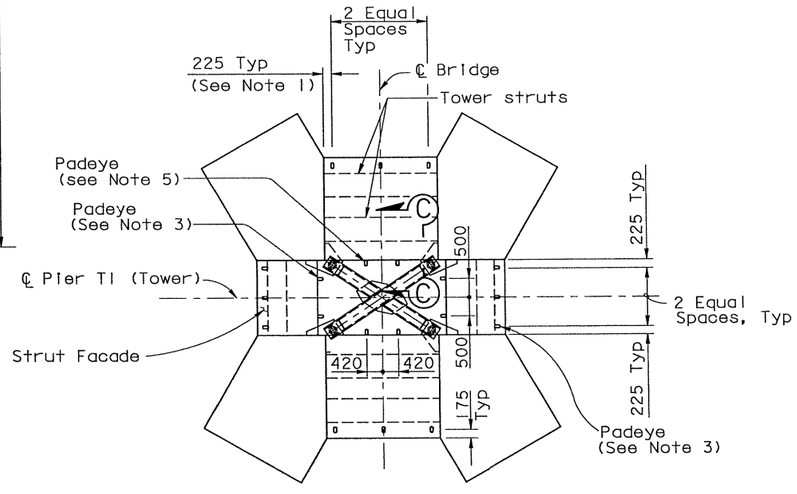

SECTION B-B
1:80
Strut Facade Type B

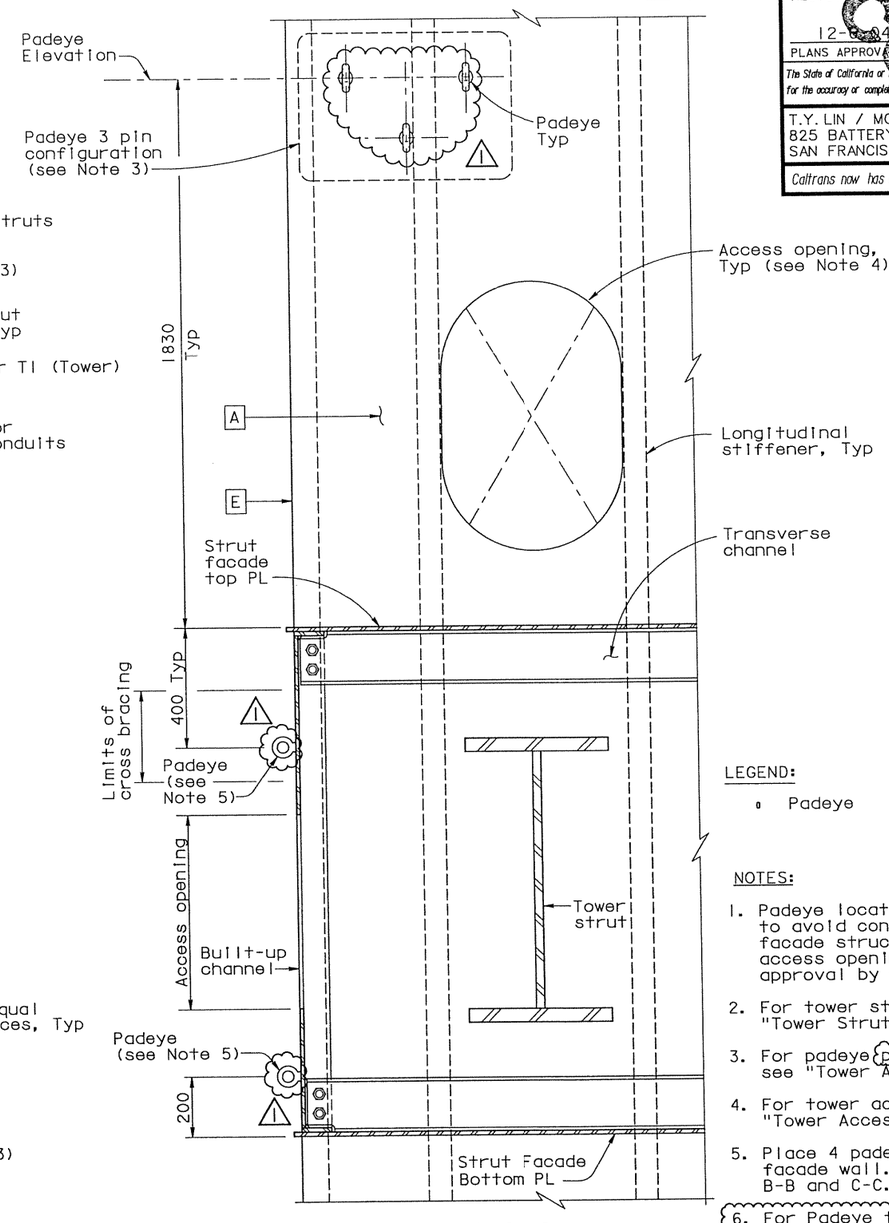

SECTION C-C
1:10
Tower cross bracings not shown for clarity

LEGEND:

▫ Padeye

NOTES:

1. Padeye locations shall be shifted to avoid conflict with tower strut facade structural components and access openings and submitted for approval by the Engineer.
2. For tower strut facade details, see "Tower Strut Facade Details" sheets.
3. For padeye pin configuration details, see "Tower Access Details No.22" sheet.
4. For tower access opening details, see "Tower Access Details No.4" sheet.
5. Place 4 padeyes on each inbound strut facade wall. For locations see sections B-B and C-C.
6. For Padeye typical details and design force, see "Girder Access Details No.10" sheet.

100% PS&E

ALL DIMENSIONS ARE IN MILLIMETERS UNLESS OTHERWISE SHOWN

PADEYE LAYOUT AT TOWER STRUT FACADES

DESIGN	BY M. Nader	CHECKED	N. Vo
DETAILS	BY L. Rus	CHECKED	D. Harrison
QUANTITIES	BY L. Rus	CHECKED	D. Harrison

R. Valizadeh/V. Toan/Y.L./W.L./F.C.
DESIGN OVERSIGHT
SIGN OFF DATE 06/22/07

PREPARED FOR THE STATE OF CALIFORNIA DEPARTMENT OF TRANSPORTATION

R. Manzanarez
PROJECT ENGINEER

CU 04
EA 0120F1

BRIDGE NO. 34-0006L/R
KILOMETER POST 13.2/13.9

SAN FRANCISCO OAKLAND BAY BRIDGE
EAST SPAN SEISMIC SAFETY PROJECT
SELF-ANCHORED SUSPENSION BRIDGE
(SUPERSTRUCTURE & TOWER)

TOWER ACCESS DETAILS NO. 19

Rev. Date: 5-18-98

ORIGINAL SCALE IN MILLIMETERS FOR REDUCED PLANS 0 10 20 30 40 50 60 70 80 90 100

DISREGARD PRINTS BEARING EARLIER REVISION DATES →

REVISION DATES (PRELIMINARY STAGE ONLY): 04/26/02 | 07/01/02 | 12/19/02

SHEET 518R1 OF

FILE => I:\bb\04-0120I\sas\contract plans and coo\coo\In progress\coo#41\dgn\akacc19.dgn

Caltrans now has a web site! To get to the web site, go to: http://www.dot.ca.gov

DIST.	COUNTY	ROUTE	KILOMETER POST TOTAL PROJECT	SHEET NO.	TOTAL SHEETS
04	SF	80	13.2/13.9	936RI	1204

Caltrans Metric

REGISTERED ENGINEER - CIVIL

12-6-04

PLANS APPROVAL DATE

The State of California or its officers or agents shall not be responsible for the accuracy or completeness of electronically copies of this plan sheet.

REGISTERED PROFESSIONAL ENGINEER
Marwan N.Nader
No. C 054426
Exp. 12/31/07
CIVIL
STATE OF CALIFORNIA

T.Y. LIN / MOFFATT & NICHOL
825 BATTERY STREET
SAN FRANCISCO, CA 94111

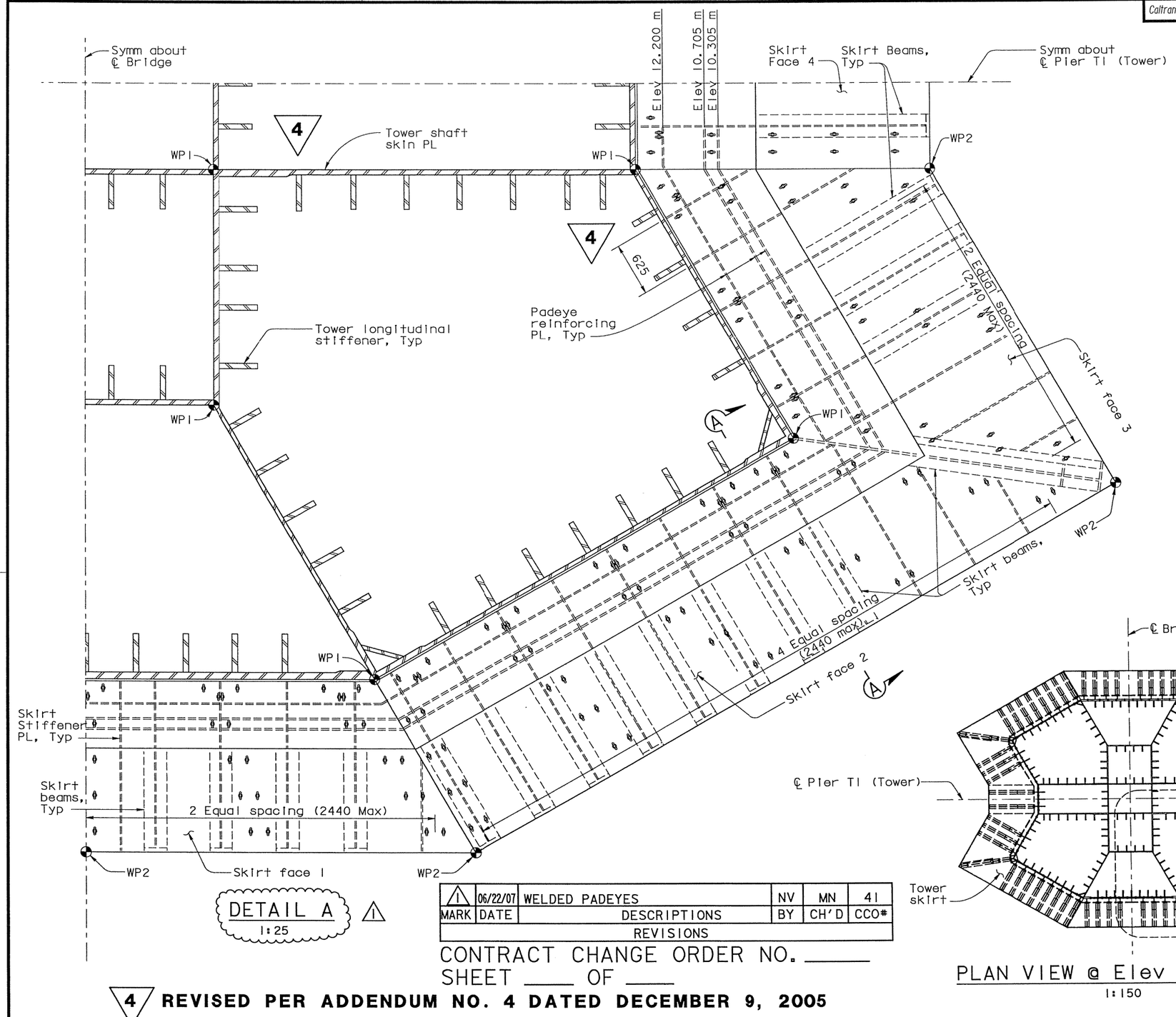

DETAIL A
1:25

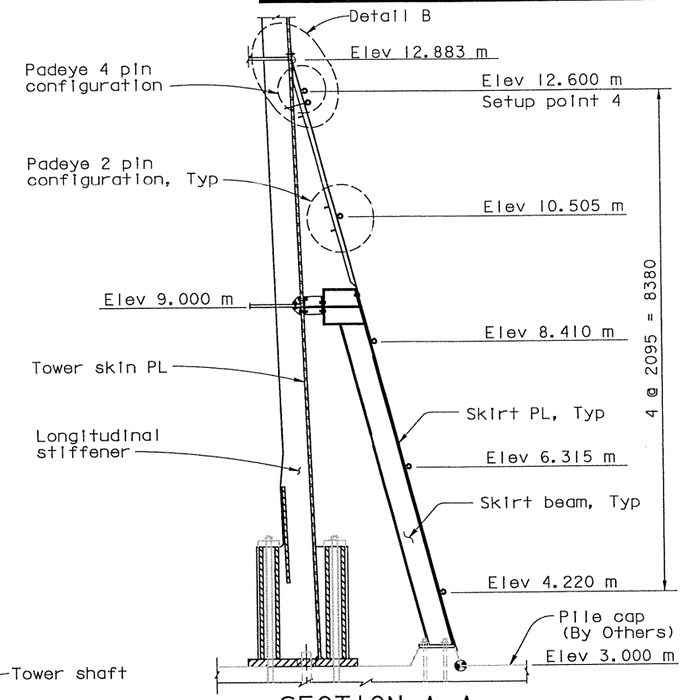

SECTION A-A
1:50

(Padeye NTS and they are shown for clarity)

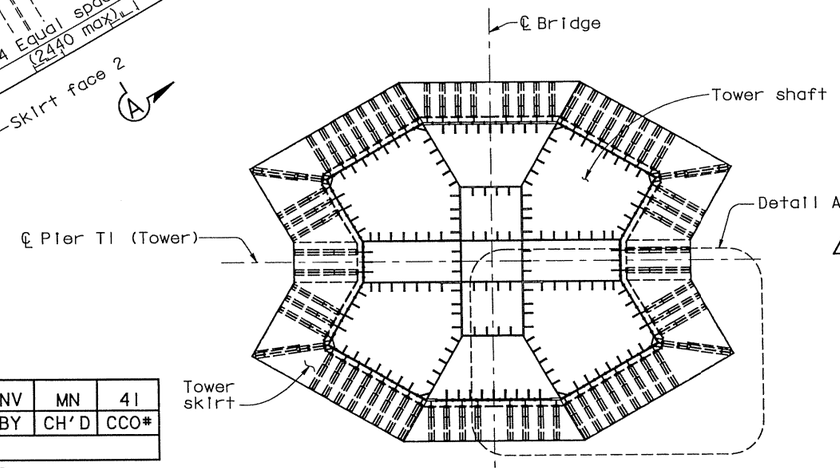

PLAN VIEW @ Elev 13.000 m
1:150

LEGEND:

⚠ ⑥ Padeye

WP1 Tower shaft working point

WP2 Tower skirt working point

NOTES:

1. For Detail B, see "Tower Access Details No.21" sheet.
2. For details not shown, see "Tower Skirt Details" sheets.
3. ⚠ For Padeye typical detail and design force, see "Girder Access Details No.10" sheet.
4. For Padeye pin configuration details, see "Tower Access Details No.22" sheet.

100% PS&E

MARK	DATE	DESCRIPTIONS	BY	CH'D	CCO#
		REVISIONS			
⚠1	06/22/07	WELDED PADEYES	NV	MN	41

CONTRACT CHANGE ORDER NO. _____
SHEET ____ OF ____

⚠4 REVISED PER ADDENDUM NO. 4 DATED DECEMBER 9, 2005

PADEYE LAYOUT AT TOWER SKIRT

ALL DIMENSIONS ARE IN MILLIMETERS UNLESS OTHERWISE SHOWN

R. Valizadeh/V. Toan/Y.L./W.L./F.C.
DESIGN OVERSIGHT
SIGN OFF DATE 06/22/07

	BY	CHECKED
DESIGN	M. Nader	N. Vo
DETAILS	L. Rus	D. Harrison
QUANTITIES	L. Rus	D. Harrison

PREPARED FOR THE STATE OF CALIFORNIA DEPARTMENT OF TRANSPORTATION

R. Manzanarez
PROJECT ENGINEER

BRIDGE NO. 34-0006L/R
KILOMETER POST 13.2/13.9

CU 04
EA 0120F1

SAN FRANCISCO OAKLAND BAY BRIDGE
EAST SPAN SEISMIC SAFETY PROJECT
SELF-ANCHORED SUSPENSION BRIDGE
(SUPERSTRUCTURE & TOWER)

TOWER ACCESS DETAILS NO. 20

Rev. Date: 5-18-98

ORIGINAL SCALE IN MILLIMETERS FOR REDUCED PLANS 0 10 20 30 40 50 60 70 80 90 100

DISREGARD PRINTS BEARING EARLIER REVISION DATES →

REVISION DATES (PRELIMINARY STAGE ONLY): 01/08/02 | 01/01/02 | 12/18/02 | 01/16/03 | 11/13/05

SHEET 519RI | OF

FILE => I:\bb\04-012001\sas\contract plans and cco\cco\In progress\cco#41\dgn\akacc20.dgn

DIST.	COUNTY	ROUTE	KILOMETER POST TOTAL PROJECT	SHEET NO.	TOTAL SHEETS
04	SF	80	13.2/13.9	937RI	1204

REGISTERED ENGINEER - CIVIL

12-6-04
PLANS APPROVAL DATE

REGISTERED PROFESSIONAL ENGINEER
Marwan N. Nader
No. C 054426
Exp. 12/31/07
CIVIL
STATE OF CALIFORNIA

The State of California or its officers or agents shall not be responsible for the accuracy or completeness of electronic copies of this plan sheet.

T.Y. LIN / MOFFATT & NICHOL
825 BATTERY STREET
SAN FRANCISCO, CA 94111

Caltrans now has a web site! To get to the web site, go to: http://www.dot.ca.gov

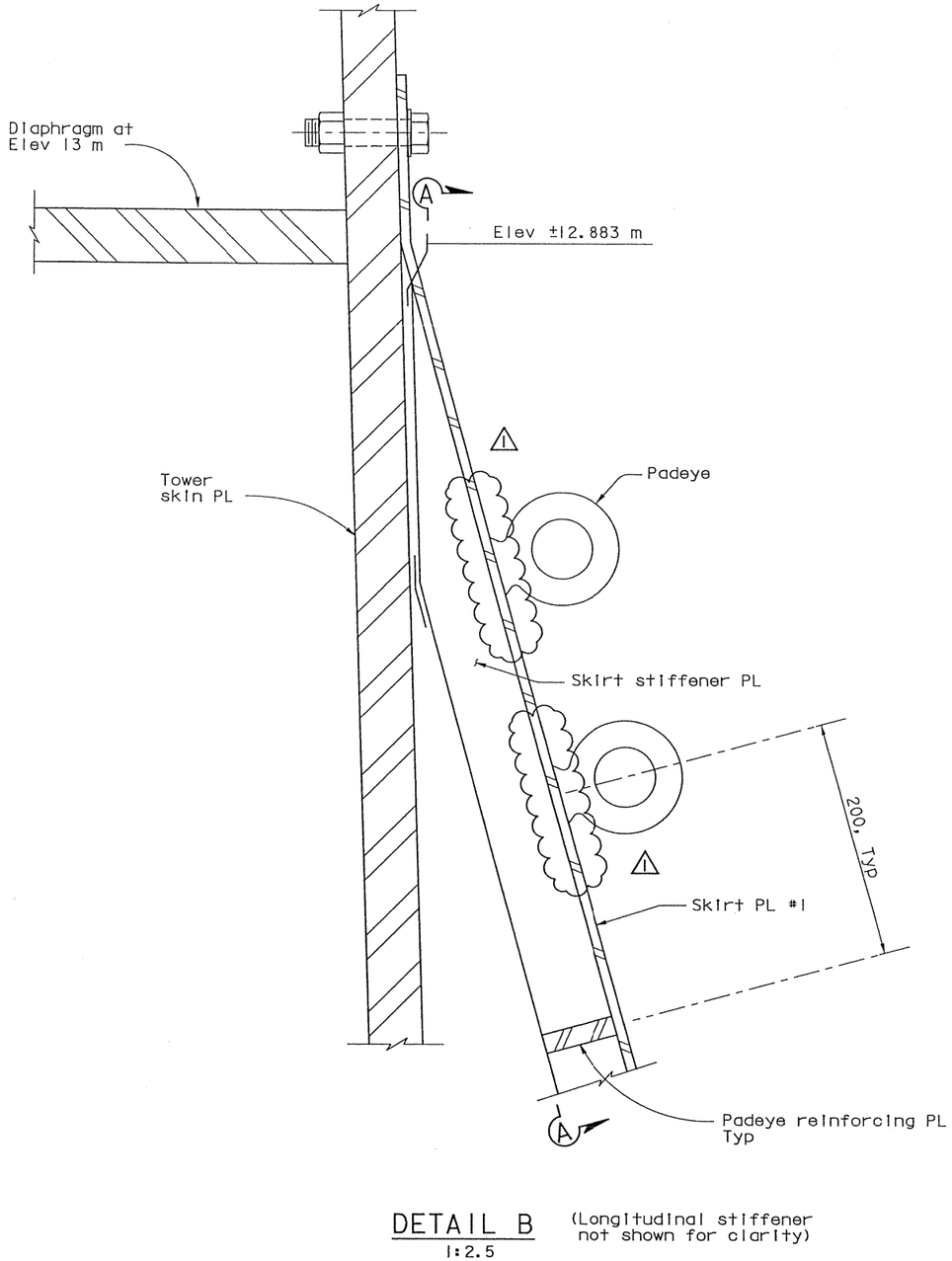

DETAIL B
1:2.5

(Longitudinal stiffener not shown for clarity)

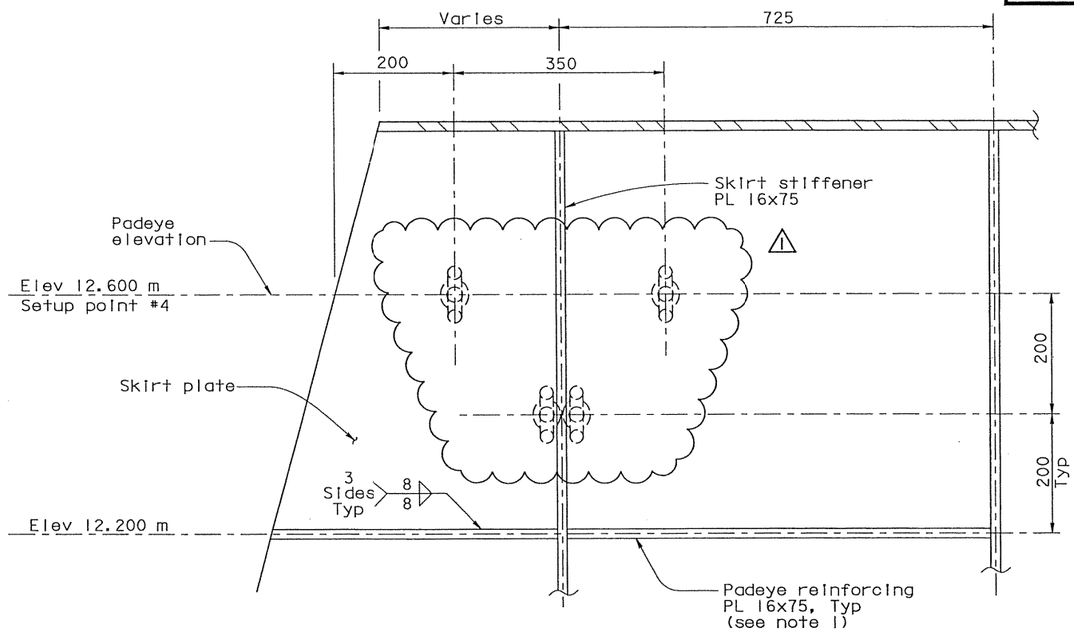

SECTION A-A
1:5

(Diaphragm at Elev 13 m and tower shaft skin PL not shown for clarity)

MARK	DATE	DESCRIPTIONS	BY	CH'D	CCO#
		REVISIONS			
1	06/22/07	WELDED PADEYES	NV	MN	41

Notes:

1. For location of padeye reinforcing plates, see "Tower Access Details No.20" sheet.

ALL DIMENSIONS ARE IN MILLIMETERS UNLESS OTHERWISE SHOWN

SAN FRANCISCO OAKLAND BAY BRIDGE
EAST SPAN SEISMIC SAFETY PROJECT
SELF-ANCHORED SUSPENSION BRIDGE
(SUPERSTRUCTURE & TOWER)

TOWER ACCESS DETAILS NO. 21

R. Vallizadeh/V. Toan/Y.L./W.L./F.C.
DESIGN OVERSIGHT
SIGN OFF DATE 06/22/07

	BY	CHECKED
DESIGN	M. Nader	N. Vo
DETAILS	S. Hamoud	D. Harrison
QUANTITIES	S. Hamoud	D. Harrison

PREPARED FOR THE
STATE OF CALIFORNIA
DEPARTMENT OF TRANSPORTATION

R. Manzanarez
PROJECT ENGINEER

BRIDGE NO. 34-0006L/R
KILOMETER POST 13.2/13.9

Rev. Date: 5-18-98

ORIGINAL SCALE IN MILLIMETERS FOR REDUCED PLANS 0 10 20 30 40 50 60 70 80 90 100

CU 04
EA 0120F1

DISREGARD PRINTS BEARING EARLIER REVISION DATES →

REVISION DATES (PRELIMINARY STAGE ONLY): 04/08/02 07/01/02 12/13/02

SHEET 520RI OF

FILE => I:\bb\04-0120I\sas\contract plans and cco\cco\In progress\cco#41\akacc21.dgn

100% PS&E

USERNAME => vlanatovs DATE PLOTTED => 25 JUN 2007 TIME PLOTTED => 08:24:16

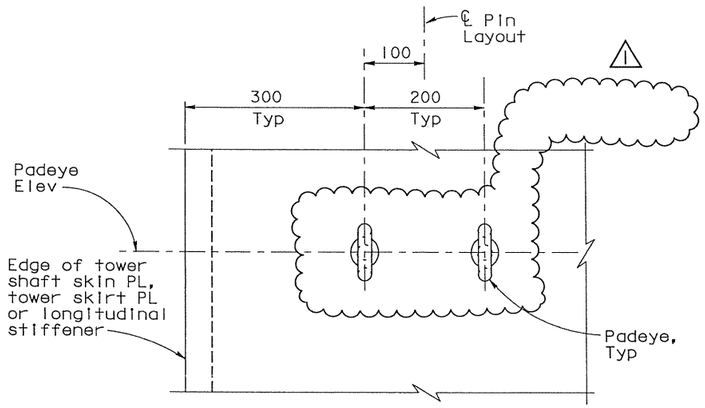

2 PIN CONFIGURATION
1:5

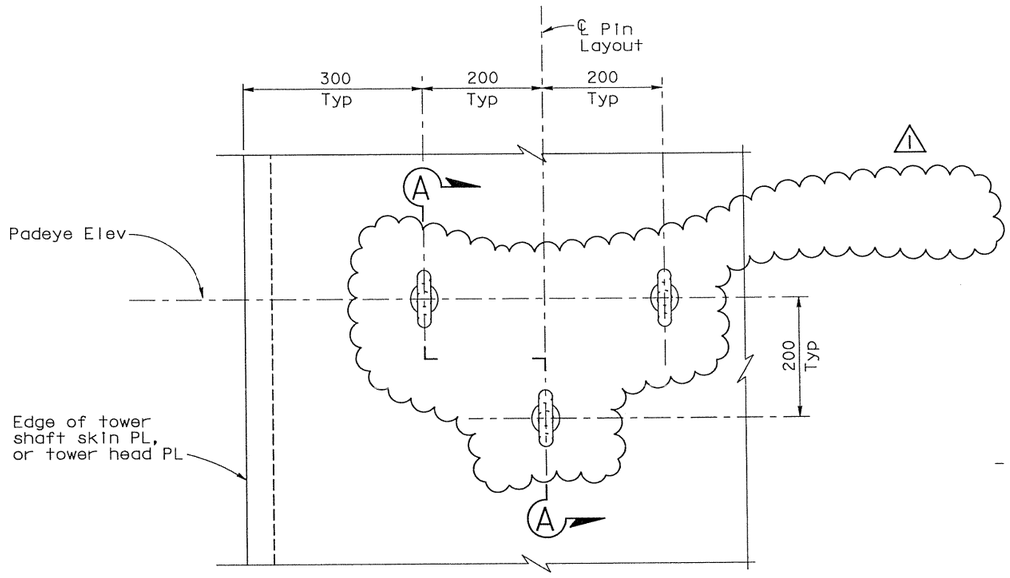

3 PIN CONFIGURATION
1:5

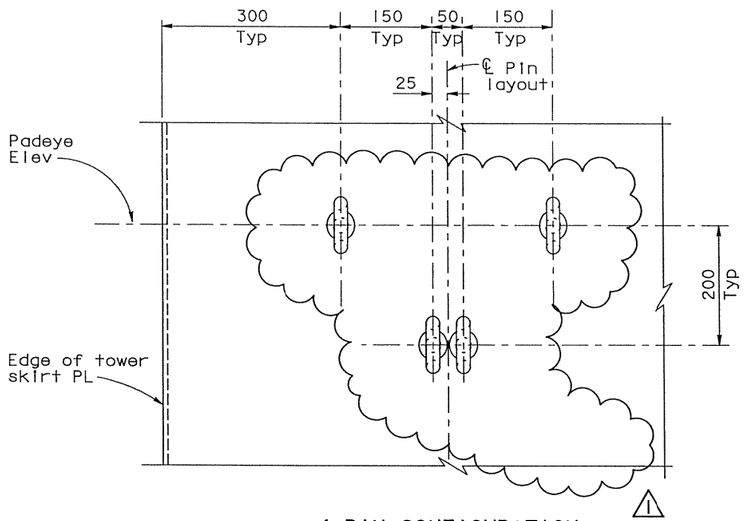

4 PIN CONFIGURATION
1:5

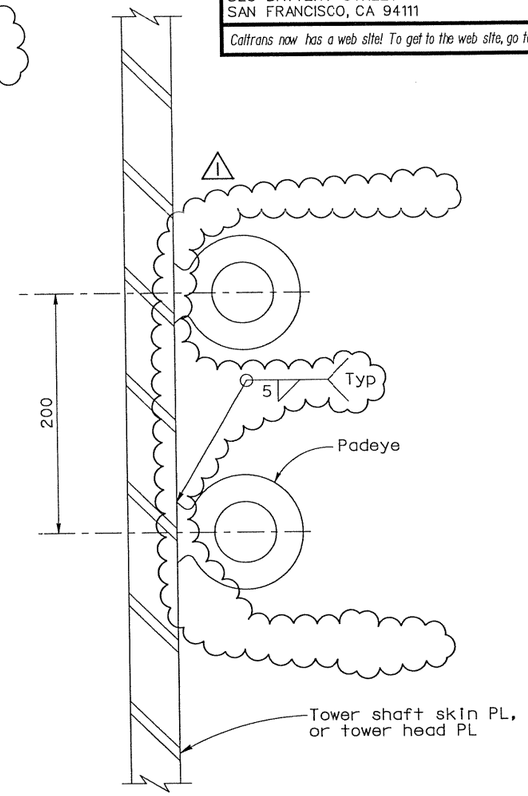

SECTION A-A
1:2.5

NOTES:

1. For Padeye typical details and design force, see "Girder Access Details No.10" sheet.

PADEYE CONFIGURATION

MARK	DATE	DESCRIPTIONS	BY	CH'D	CCO#
		REVISIONS			
1	06/22/07	WELDED PADEYES	NV	MN	41

CONTRACT CHANGE ORDER NO. _____
SHEET ____ OF ____

ALL DIMENSIONS ARE IN MILLIMETERS UNLESS OTHERWISE SHOWN

DIST.	COUNTY	ROUTE	KILOMETER POST TOTAL PROJECT	SHEET NO.	TOTAL SHEETS
04	SF	80	13.2/13.9	938R1	1204

Caltrans Metric

REGISTERED ENGINEER - CIVIL
12-6-04
PLANS APPROVAL DATE

PROFESSIONAL ENGINEER — Marwan N. Nader — No. C 054426 — Exp. 12/31/07 — CIVIL — STATE OF CALIFORNIA

The State of California or its officers or agents shall not be responsible for the accuracy or completeness of electronic copies of this plan sheet.

T.Y. LIN / MOFFATT & NICHOL
825 BATTERY STREET
SAN FRANCISCO, CA 94111

Caltrans now has a web site! To get to the web site, go to: http://www.dot.ca.gov

100% PS&E

R. Valizadeh/V. Toan/Y.L./W.L./F.C. DESIGN OVERSIGHT	DESIGN	BY M. Nader	CHECKED N. Vo
Ryo Valizadeh / Vang Toan / Y. Liu SIGN OFF DATE 06/22/07	DETAILS	BY L. Rus	CHECKED D. Harrison
Rev. Date: 5-18-98	QUANTITIES	BY L. Rus	CHECKED D. Harrison

PREPARED FOR THE STATE OF CALIFORNIA DEPARTMENT OF TRANSPORTATION

R. Manzanarez
PROJECT ENGINEER

BRIDGE NO. 34-0006L/R
KILOMETER POST 13.2/13.9

CU 04
EA 0120F1

DISREGARD PRINTS BEARING EARLIER REVISION DATES →

REVISION DATES (PRELIMINARY STAGE ONLY): 05/31/01 | 04/04/02 | 07/01/02 | 12/19/02

SHEET 521R1 OF

ORIGINAL SCALE IN MILLIMETERS FOR REDUCED PLANS 0 10 20 30 40 50 60 70 80 90 100

FILE => I:\bb\04-012001\sas\contract plans and cco\cco\In progress\cco=41\dgn\akacc22.dgn

SAN FRANCISCO OAKLAND BAY BRIDGE
EAST SPAN SEISMIC SAFETY PROJECT
SELF-ANCHORED SUSPENSION BRIDGE
(SUPERSTRUCTURE & TOWER)

TOWER ACCESS DETAILS NO. 22

DIST.	COUNTY	ROUTE	KILOMETER POST TOTAL PROJECT	SHEET NO.	TOTAL SHEETS
04	SF	80	13.2/13.9	948R1	1204

REGISTERED ENGINEER - CIVIL

12-6-04

PLANS APPROVAL DATE

REGISTERED PROFESSIONAL ENGINEER
Marwan N. Nader
No. C 054426
Exp. 12/31/07
CIVIL
STATE OF CALIFORNIA

The State of California or its officers or agents shall not be responsible for the accuracy or completeness of electronic copies of this plan sheet.

T.Y. LIN / MOFFATT & NICHOL
825 BATTERY STREET
SAN FRANCISCO, CA 94111

Caltrans now has a web site! To get to the web site, go to: http://www.dot.ca.gov

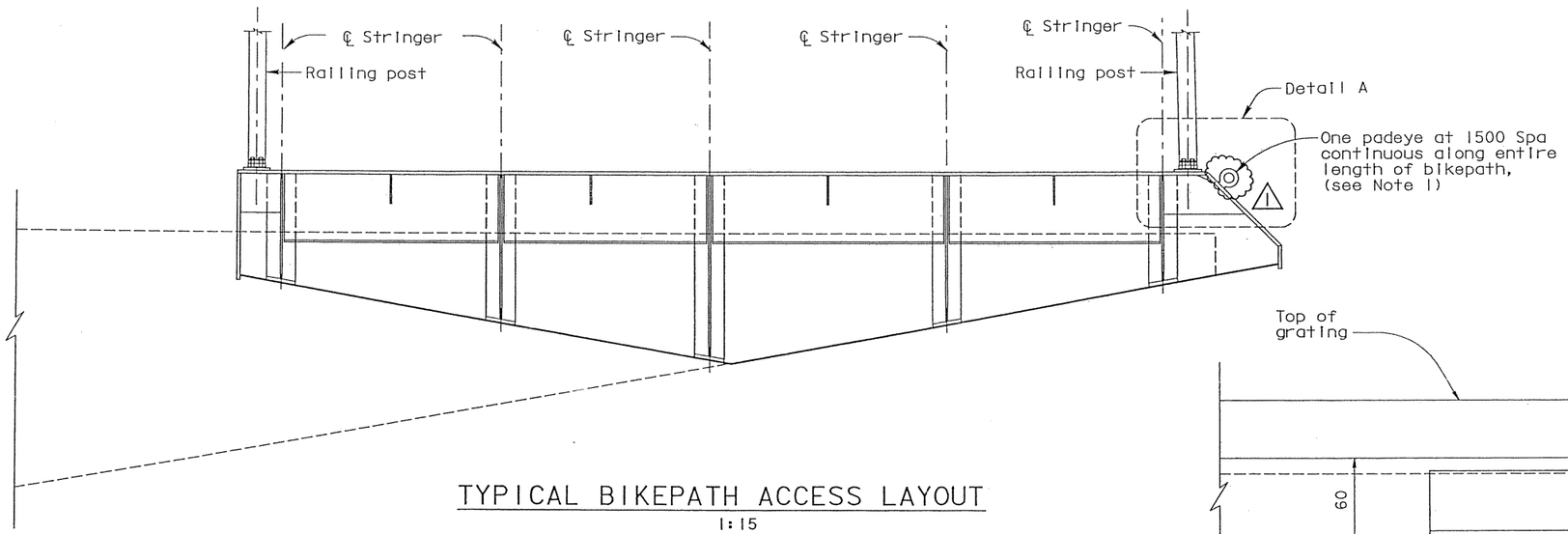

TYPICAL BIKEPATH ACCESS LAYOUT
1:15

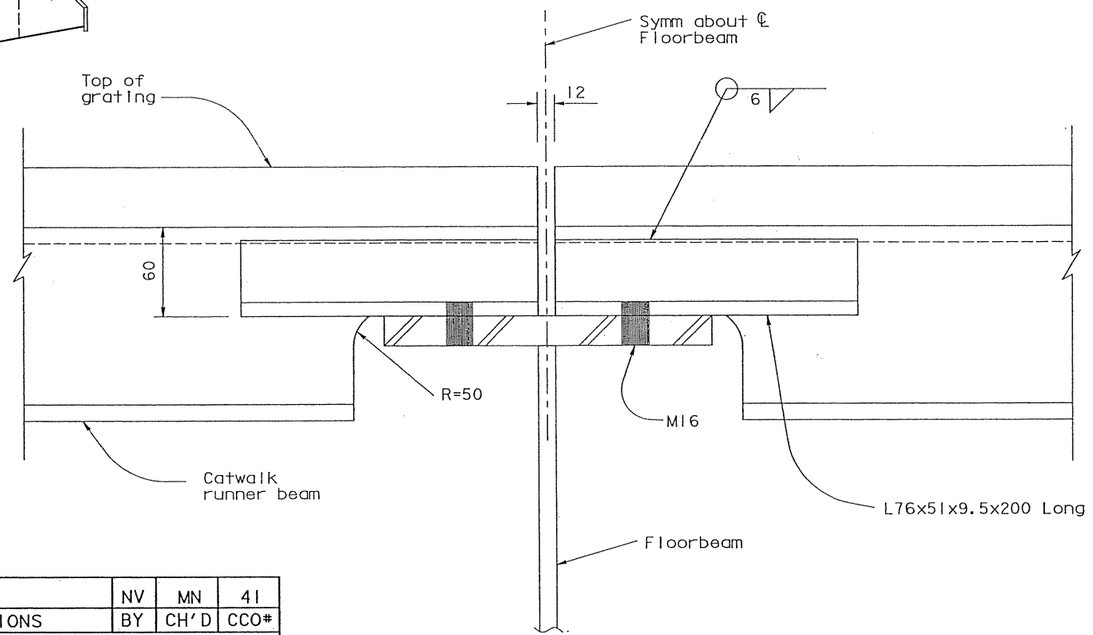

DETAIL B
1:2.5

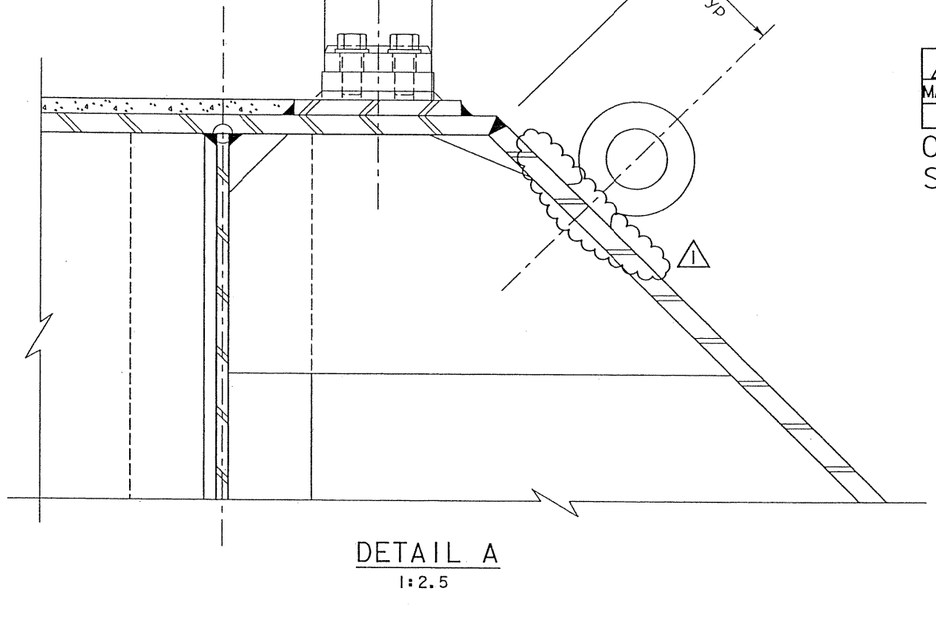

DETAIL A
1:2.5

MARK	DATE	DESCRIPTIONS	BY	CH'D	CCO#
		REVISIONS			
1	06/22/07	WELDED PADEYES	NV	MN	41

CONTRACT CHANGE ORDER NO. ____
SHEET ___ OF ___

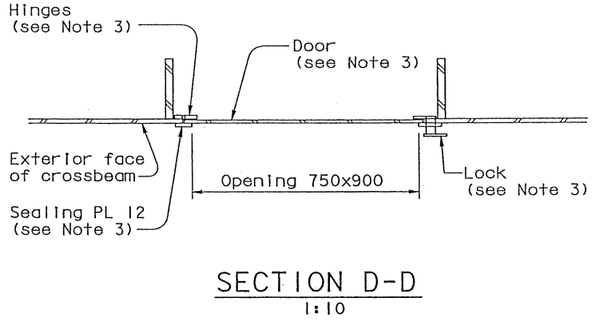

SECTION D-D
1:10

NOTES:

1. For bikepath padeye detail, see "Girder Access Details No. 10 sheet.
2. For bikepath details, see "Bikepath Details" sheets.
3. For details not shown, see "Access Opening With Door At Vertical Face Of Tower Strut Facade" and "Access Opening Door Detail" on "Tower Access Details No. 4" sheet.

ALL DIMENSIONS ARE IN MILLIMETERS UNLESS OTHERWISE SHOWN

R. Vallzadeh/V. Toan/Y.L./W.L./F.C.
DESIGN OVERSIGHT
SIGN OFF DATE 06/22/07

	BY	CHECKED
DESIGN	M. Nader	N. Vo
DETAILS	M. Roberts	N. Vo
QUANTITIES	M. Roberts	N. Vo

PREPARED FOR THE STATE OF CALIFORNIA
DEPARTMENT OF TRANSPORTATION

R. Manzanarez
PROJECT ENGINEER

BRIDGE NO. 34-0006L/R
KILOMETER POST 13.2/13.9

SAN FRANCISCO OAKLAND BAY BRIDGE
EAST SPAN SEISMIC SAFETY PROJECT
SELF-ANCHORED SUSPENSION BRIDGE
(SUPERSTRUCTURE & TOWER)

GIRDER ACCESS DETAILS NO. 8

Rev. Date: 5-18-98

ORIGINAL SCALE IN MILLIMETERS FOR REDUCED PLANS 0 10 20 30 40 50 60 70 80 90 100

CU 04
EA 0120F1

DISREGARD PRINTS BEARING EARLIER REVISION DATES

REVISION DATES (PRELIMINARY STAGE ONLY): 04/08/02 | 07/01/02 | 12/19/02

SHEET 53 OF 1R1

FILE => I:\bb\04-012001\sas\contract plans and cco\cco\In progress\cco=41\akacc08d.dgn

100% PS&E
DATE PLOTTED => 25 JUN 2007
TIME PLOTTED => 11:10:32
USERNAME => klo

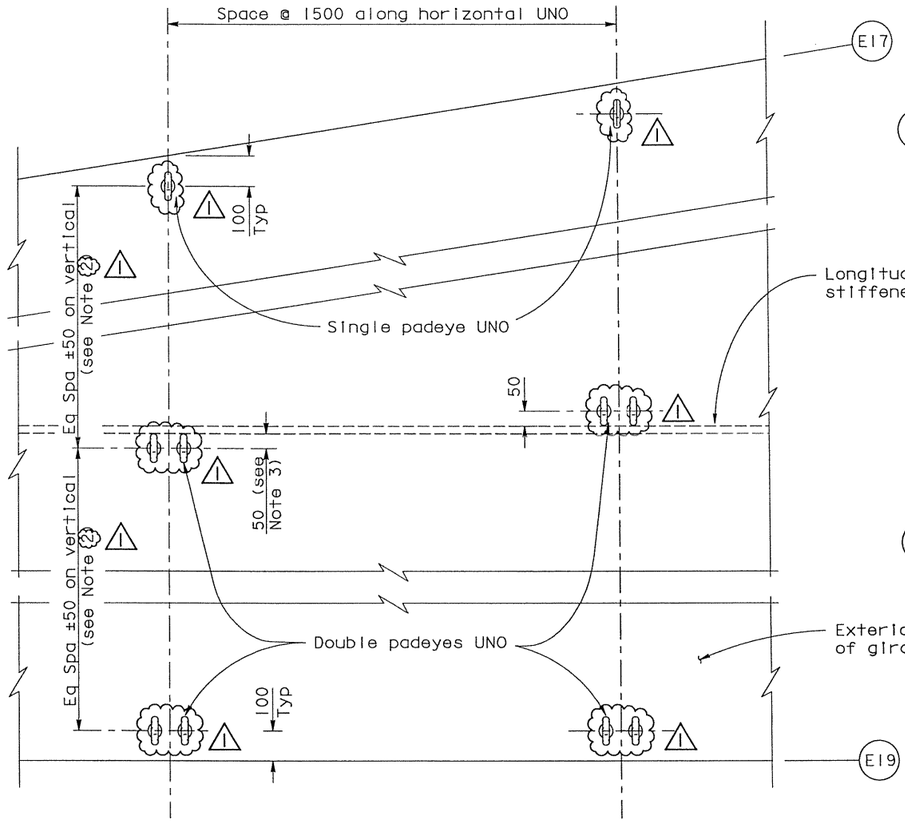

DETAIL B

1:10

(Only one stiffener shown for clarity)

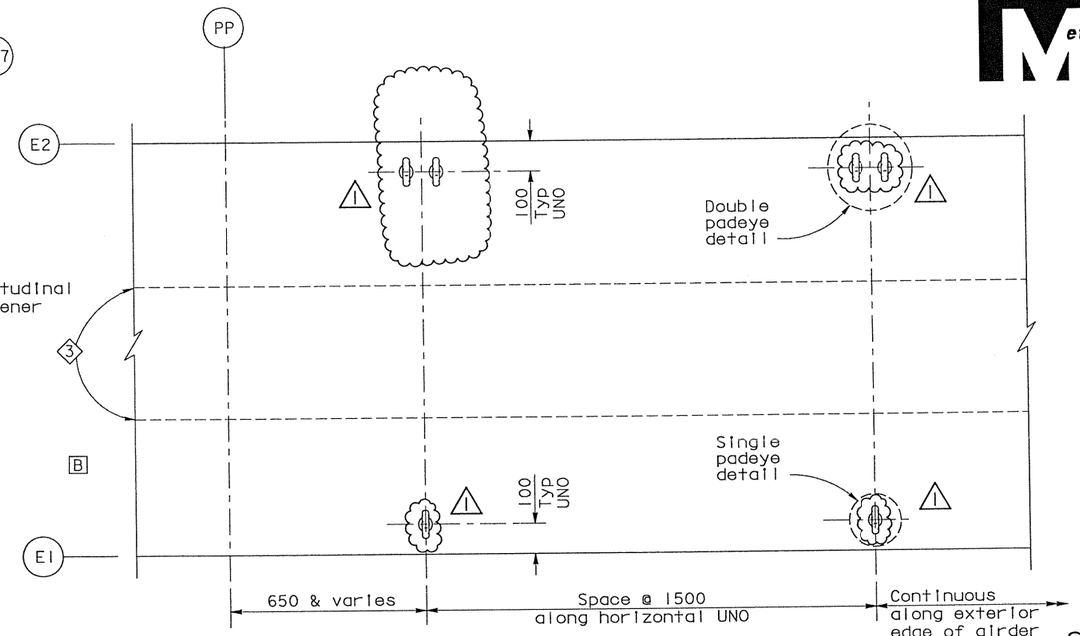

DETAIL A

1:10

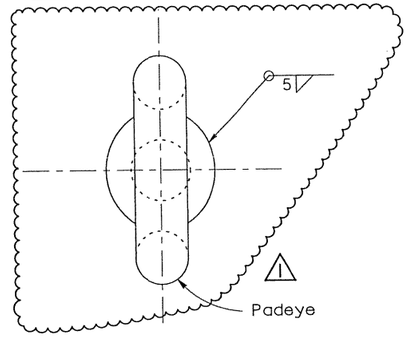

SINGLE PADEYE DETAIL

1:1.25

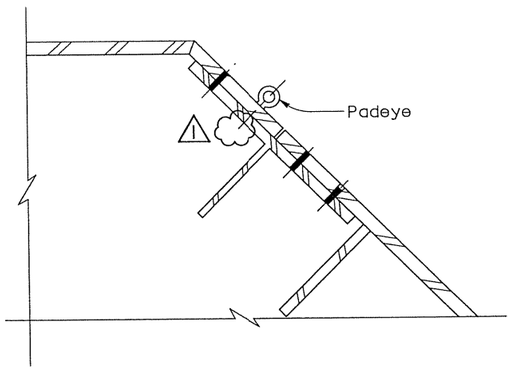

PADEYE AT ARCHITECTURAL SPLICE DETAIL

1:5

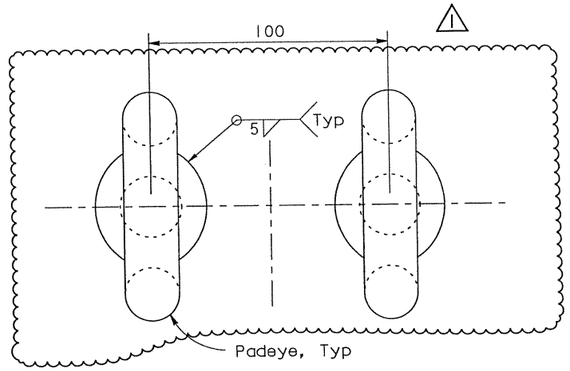

DOUBLE PADEYE DETAIL

1:1.25

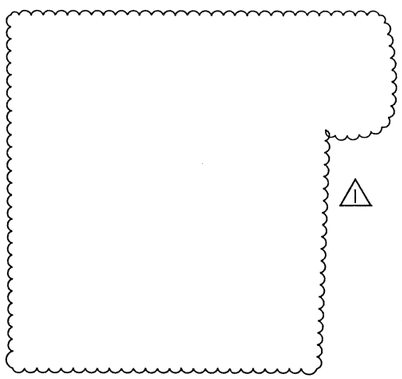

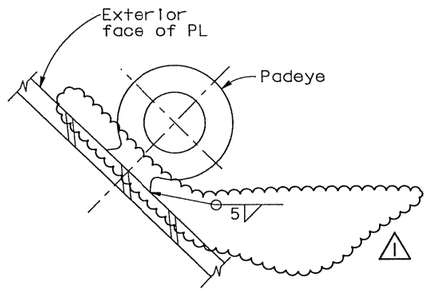

PADEYE AT BIKEPATH DETAIL

1:2.5

(Counterweight detail similar)

(Typical Welded Padeye) ⚠1

NOTES:

1. Padeyes shall be Crosby size No.4 or equivalent, with a 25 mm diameter center hole.
2. Locate padeye bolt centers to be 50 mm from face of nearest shown longitudinal stiffener.
3. Padeye locations shall be shifted to avoid conflict with structural and drainage components and submitted for approval by the Engineer.
4. The padeye shall remain elastic under a tension and shear force of 22 kN. These forces shall not be considered simultaneous.

100% PS&E

MARK	DATE	DESCRIPTIONS	BY	CH'D	CCO#
⚠1	06/22/07	WELDED PADEYES	NV	MN	41

REVISIONS

CONTRACT CHANGE ORDER NO. _____

SHEET ___ OF ___

ALL DIMENSIONS ARE IN MILLIMETERS UNLESS OTHERWISE SHOWN

DIST.	COUNTY	ROUTE	TOTAL PROJECT	NO.	SHEETS
04	SF	80	13.2/13.9	950R1	1204

Caltrans Metric

REGISTERED ENGINEER - CIVIL

12-6-04

PLANS APPROVAL DATE

REGISTERED PROFESSIONAL ENGINEER — Marwan N. Nader — No. C 054426 — Exp. 12/31/07 — CIVIL — STATE OF CALIFORNIA

The State of California or its officers or agents shall not be responsible for the accuracy or completeness of electronic copies of this plan sheet.

T.Y. LIN / MOFFATT & NICHOL
825 BATTERY STREET
SAN FRANCISCO, CA 94111

To get to the web site, go to: http://www.dot.ca.gov

R. Vallizadeh/V. Toan/Y.L./W.L./F.C.
DESIGN OVERSIGHT
Sign off date 06/22/07

	BY	CHECKED
DESIGN	M. Nader	N. Vo
DETAILS	M. Roberts	N. Vo
QUANTITIES	M. Roberts	N. Vo

PREPARED FOR THE STATE OF CALIFORNIA DEPARTMENT OF TRANSPORTATION

R. Manzanarez
PROJECT ENGINEER

BRIDGE NO. 34-0006L/R
KILOMETER POST 13.2/13.9

SAN FRANCISCO OAKLAND BAY BRIDGE
EAST SPAN SEISMIC SAFETY PROJECT
SELF-ANCHORED SUSPENSION BRIDGE

GIRDER ACCESS DETAILS NO. 10

Rev. Date: 5-18-98

ORIGINAL SCALE IN MILLIMETERS FOR REDUCED PLANS 0 10 20 30 40 50 60 70 80 90 100

CU 04
EA 0120F1

DISREGARD PRINTS BEARING EARLIER REVISION DATES

REVISION DATES (PRELIMINARY STAGE ONLY): 04/08/02 07/01/02 12/19/02

SHEET 533R1 OF

FILE => I:\bb\04-012001\sas\contract plans and cco\cco\In progress\cco#41\dgn\akacl10b.dgn

DIST.	COUNTY	ROUTE	TOTAL PROJECT	NO.	SHEETS
04	SF	80	13.2/13.9	954R1	1204

REGISTERED ENGINEER - CIVIL

12-6-04

PLANS APPROVAL DATE

The State of California or its officers or agents shall not be responsible for the accuracy or completeness of electronic copies of this plan sheet.

REGISTERED PROFESSIONAL ENGINEER — Marwan N. Nader — No. C 54426 — Exp. 12/31/07 — CIVIL — STATE OF CALIFORNIA

T.Y. LIN / MOFFATT & NICHOL
825 BATTERY STREET
SAN FRANCISCO, CA 94111

To get to the web site, go to: http://www.dot.ca.gov

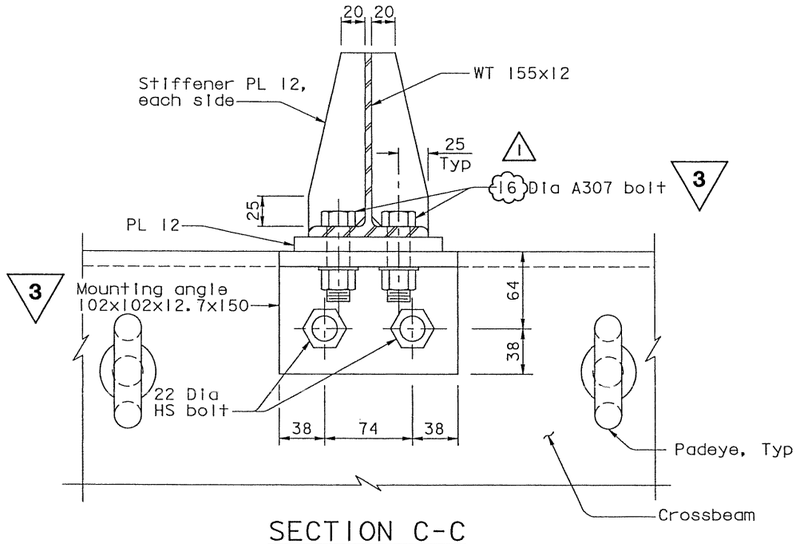

SECTION C-C
1:2.5

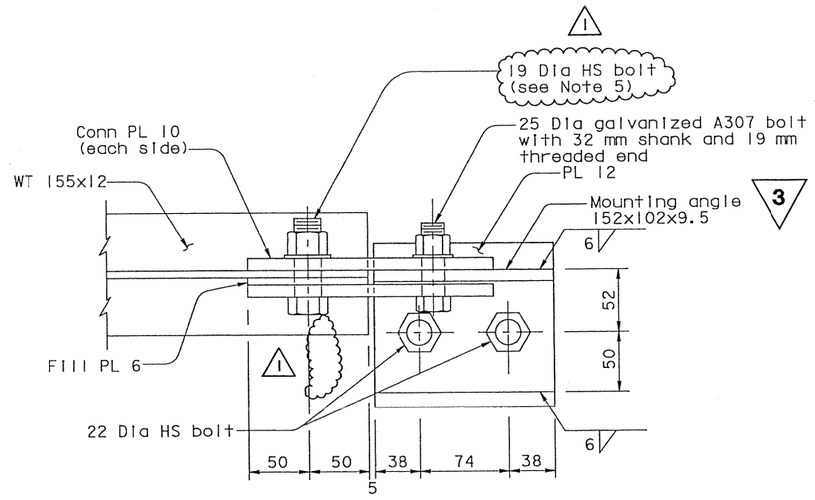

VIEW D-D
1:2.5

NOTES:

1. The bolt sizes shown correspond to US Standard bolt sizes and shall be galvanized.
2. All mounting angles connected by HS Bolts shall be provided at both faces of all crossbeams except above utility platforms. For locations see "Crossbeam Access Details No.1" and "Crossbeam Access Details No.3" sheets.
3. All A307 bolts shall be wrench tightened for future removal by maintenance personnel.
4. The 36 outriggers shall be installed at crossbeams located at panel points 27, 75, and 111, or as otherwise directed by the Engineer.
5. Bolt threads shall be excluded from the shear plane.
6. For padeye typical detail and design force, see "Girder Access Details No.10" sheet.

MARK	DATE	DESCRIPTIONS	BY	CH'D	CCO#
1	06/22/07	WELDED PADEYES	NV	MN	41
REVISIONS					

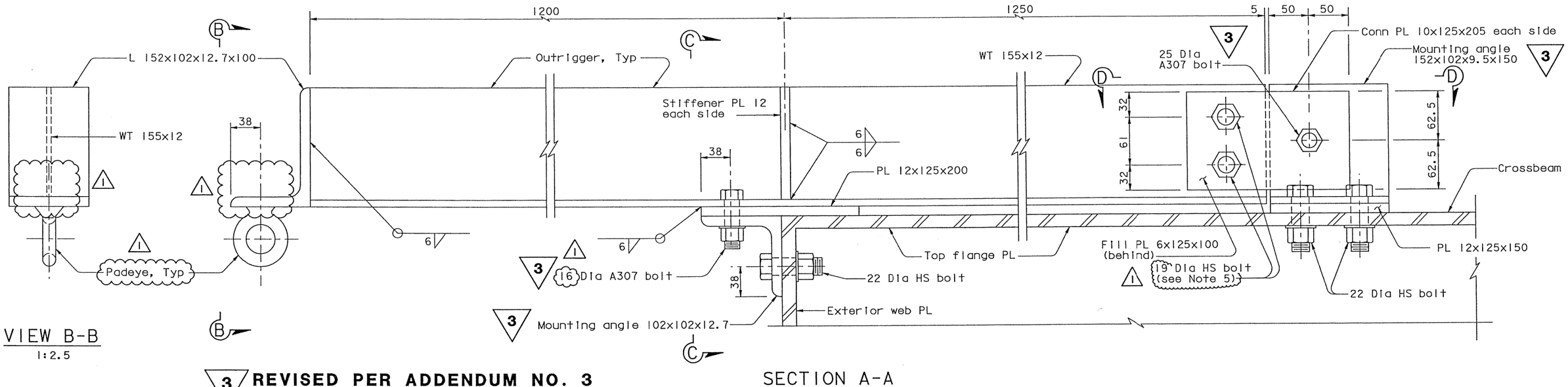

VIEW B-B
1:2.5

SECTION A-A
1:2.5

3 REVISED PER ADDENDUM NO. 3 DATED NOVEMBER 7, 2005

ALL DIMENSIONS ARE IN MILLIMETERS UNLESS OTHERWISE SHOWN

100% PS&E

R. Vallizadeh/V. Toan/Y.L./W.L./F.C.
DESIGN OVERSIGHT
SIGN OFF DATE 06/22/07

	BY	CHECKED
DESIGN	M. Nader	N. Vo
DETAILS	G. Baker	N. Vo
QUANTITIES	G. Baker	N. Vo

PREPARED FOR THE STATE OF CALIFORNIA DEPARTMENT OF TRANSPORTATION

R. Manzanarez
PROJECT ENGINEER

BRIDGE NO. 34-0006L/R
KILOMETER POST 13.2/13.9

SAN FRANCISCO OAKLAND BAY BRIDGE
EAST SPAN SEISMIC SAFETY PROJECT
SELF-ANCHORED SUSPENSION BRIDGE
(SUPERSTRUCTURE & TOWER)

CROSSBEAM ACCESS DETAILS NO. 2

Rev. Date: 5-18-98

ORIGINAL SCALE IN MILLIMETERS FOR REDUCED PLANS 0 10 20 30 40 50 60 70 80 90 100

CU 04
EA 0120F1

DISREGARD PRINTS BEARING EARLIER REVISION DATES

REVISION DATES (PRELIMINARY STAGE ONLY): 04/08/02 | 07/31/02 | 12/17/02 | 10/11/05

SHEET 537R1 OF

FILE => I:\bb\04-012001\sas\contract plans and cco\cco\In progress\cco#41\akcad02.dgn

DIST.	COUNTY	ROUTE	TOTAL PROJECT	NO.	SHEETS
04	SF	80	13.2/13.9	955R1	1204

Caltrans Metric

REGISTERED ENGINEER - CIVIL

12-6-04

PLANS APPROVAL DATE

The State of California or its officers or agents shall not be responsible for the accuracy or completeness of electronic copies of this plan sheet.

REGISTERED PROFESSIONAL ENGINEER — Marwan N.Nader — No. C 54426 — Exp. 12/31/07 — CIVIL — STATE OF CALIFORNIA

T.Y. LIN / MOFFATT & NICHOL
825 BATTERY STREET
SAN FRANCISCO, CA 94111

To get to the web site, go to: http://www.dot.ca.gov

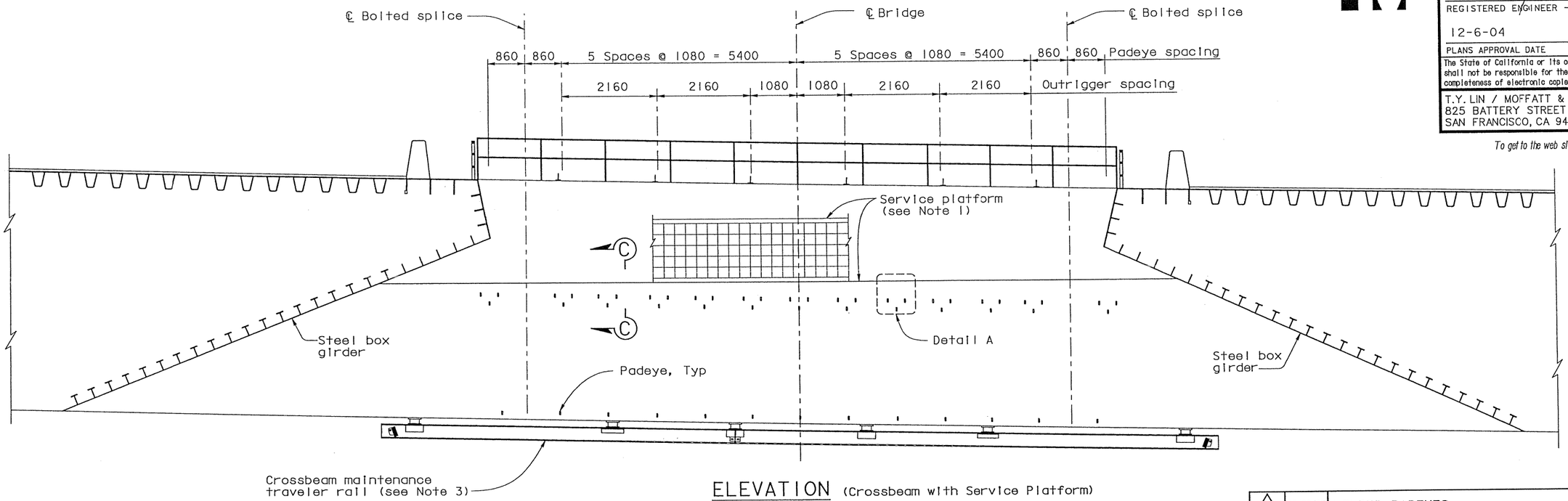

ELEVATION (Crossbeam with Service Platform)
1:50

MARK	DATE	DESCRIPTIONS	BY	CH'D	CCO#
1	06/22/07	WELDED PADEYES	NV	MN	41
		REVISIONS			

CONTRACT CHANGE ORDER NO. ____
SHEET ____ OF ____

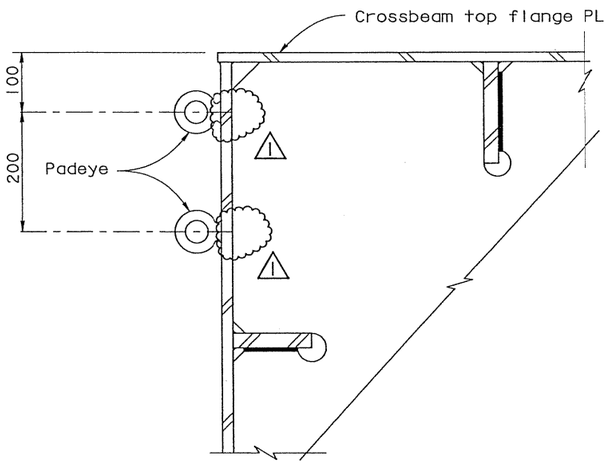

SECTION B-B
1:5

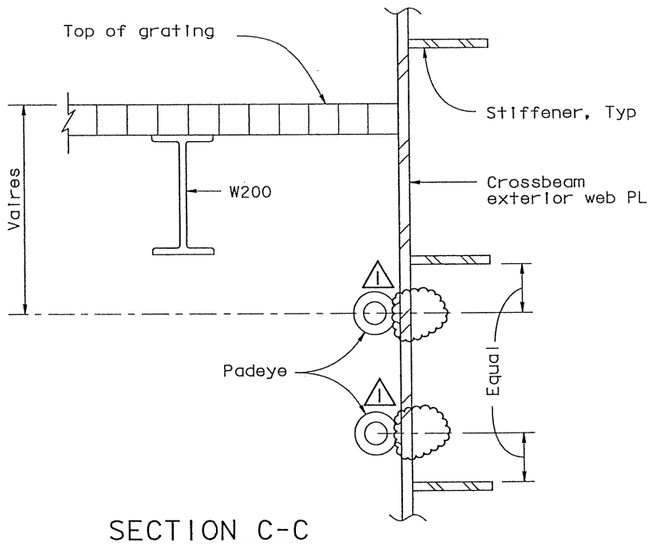

SECTION C-C
1:5

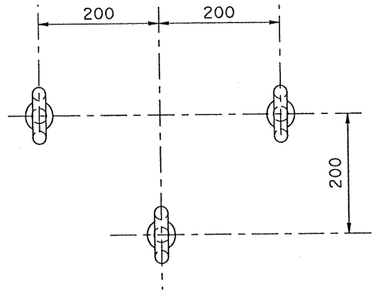

DETAIL A (3 Padeye unit)
1:5

NOTES:

1. For service platform details, see "Road Plans".
2. Crossbeams with service platform are PP14, 32, 50, 80 and 110. Platforms are attached to west face.
3. For rail details, see "Crossbeam Access Details No.4" sheet.
4. For padeye details, see "Girder Access Details No.10" sheet.

100% PS&E

ALL DIMENSIONS ARE IN MILLIMETERS UNLESS OTHERWISE SHOWN

SAN FRANCISCO OAKLAND BAY BRIDGE
EAST SPAN SEISMIC SAFETY PROJECT
SELF-ANCHORED SUSPENSION BRIDGE
(SUPERSTRUCTURE & TOWER)

CROSSBEAM ACCESS DETAILS NO.3

R. Valizadeh/V. Toan/Y.L./W.L./F.C.
DESIGN OVERSIGHT
SIGN OFF DATE 06/22/07

	BY	CHECKED
DESIGN	M. Nader	N. Vo
DETAILS	G. Baker	N. Vo
QUANTITIES	G. Baker	N. Vo

PREPARED FOR THE STATE OF CALIFORNIA DEPARTMENT OF TRANSPORTATION

R. Manzanarez
PROJECT ENGINEER

BRIDGE NO. 34-0006L/R
KILOMETER POST 13.2/13.9

Rev. Date 5-18-98

ORIGINAL SCALE IN MILLIMETERS FOR REDUCED PLANS 0 10 20 30 40 50 60 70 80 90 100

CU 04
EA 0120F1

DISREGARD PRINTS BEARING EARLIER REVISION DATES

REVISION DATES (PRELIMINARY STAGE ONLY): 04/20/02 | 07/01/02 | 12/13/02

SHEET 538R1 OF

FILE => I:\bb\04-012001\sas\contract plans and cco\cco\In progress\cco#41\akcad03.dgn