| DIST. | COUNTY | ROUTE | KILOMETER POST TOTAL PROJECT | SHEET NO. | TOTAL SHEETS |
|---|---|---|---|---|---|
| 04 | SF | 80 | 13.2/13.9 | 522R2 | 1204 |

REGISTERED ENGINEER - CIVIL

12-6-04
PLANS APPROVAL DATE

REGISTERED PROFESSIONAL ENGINEER John Sun No. C 54648 Exp. 12/31/05 CIVIL STATE OF CALIFORNIA

*The State of California or its officers or agents shall not be responsible for the accuracy or completeness of electronic copies of this plan sheet.*

T.Y. LIN / MOFFATT & NICHOL
825 BATTERY STREET
SAN FRANCISCO, CA 94111

*Caltrans now has a web site! To get to the web site, go to: http://www.dot.ca.gov*

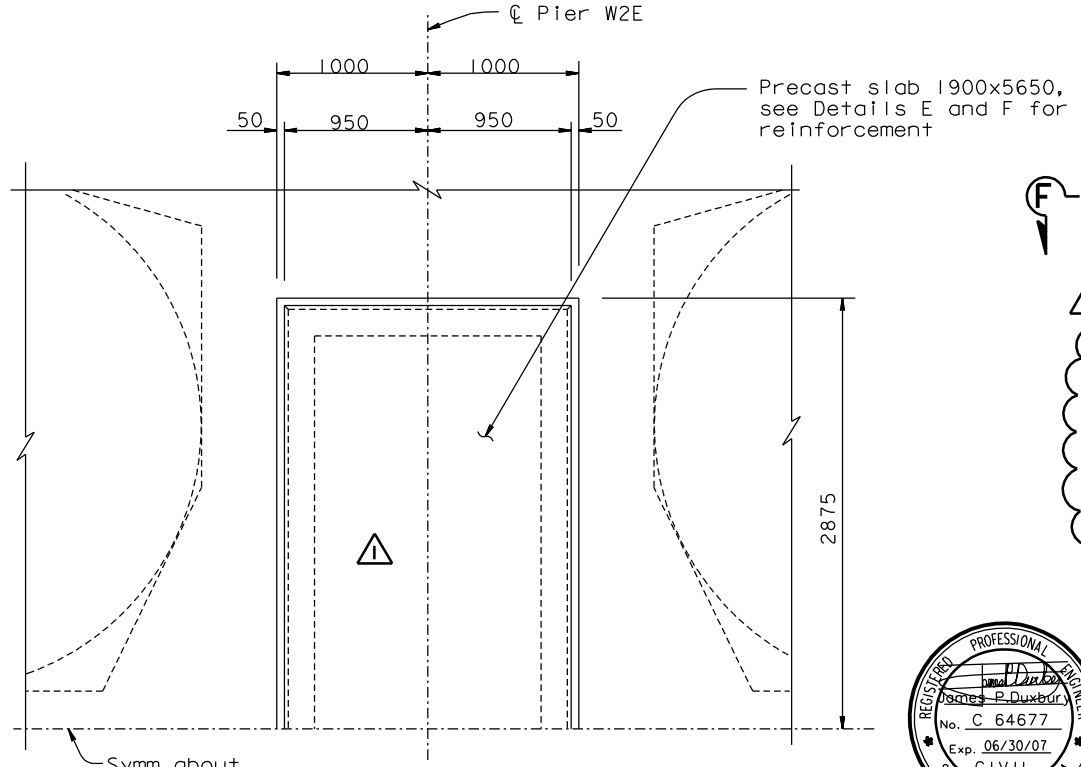


## SECTION E-E
1:25

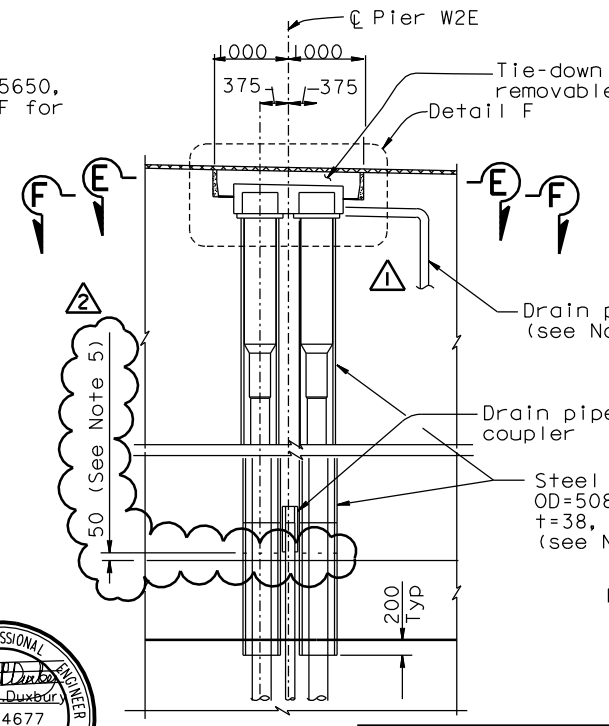


## DETAIL A
1:50

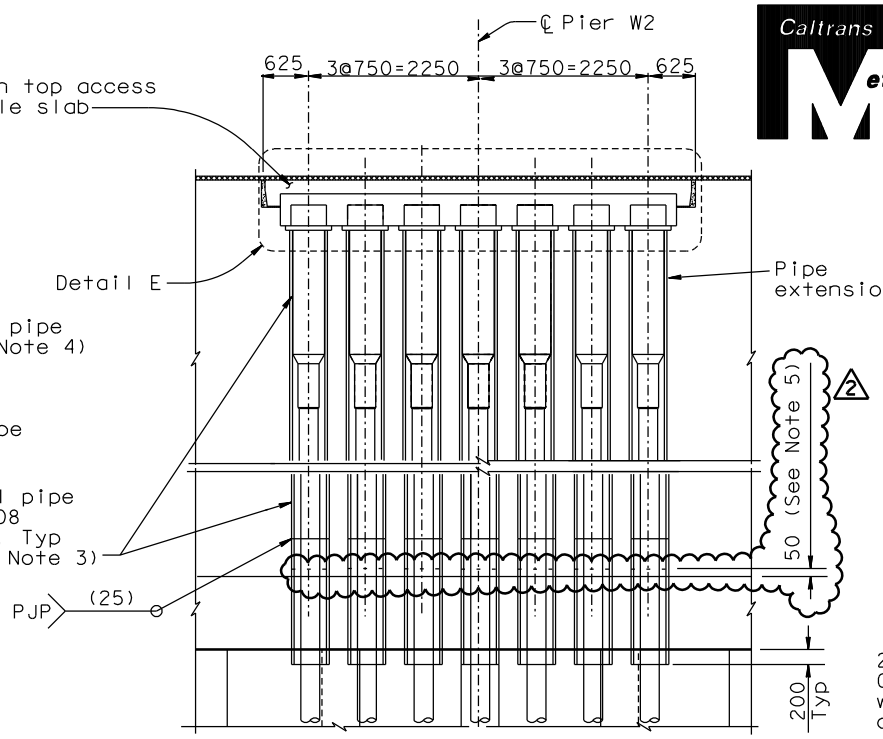


## DETAIL B
1:50

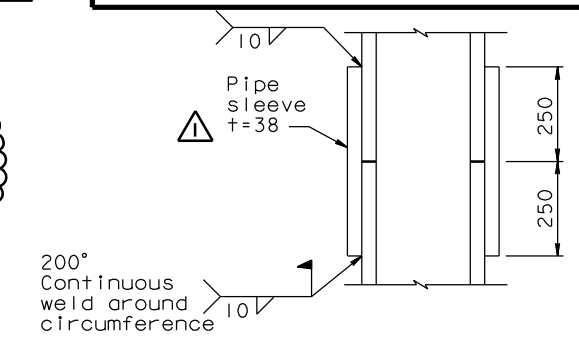


## ALTERNATE CONNECTION FOR STEEL PIPE
1:10

FOR REVISIONS ONLY

| MARK | DATE | DESCRIPTIONS | BY | CH'D | CCO# |
|---|---|---|---|---|---|
| 2 | 04/02/07 | CABLE TIE-DOWN | JD | AS | 40 |
| 1 | 07/21/06 | W2 CAP BEAM ISD | JD | NV | 23 |

REVISIONS

CONTRACT CHANGE ORDER NO. ____
SHEET ___ OF ___

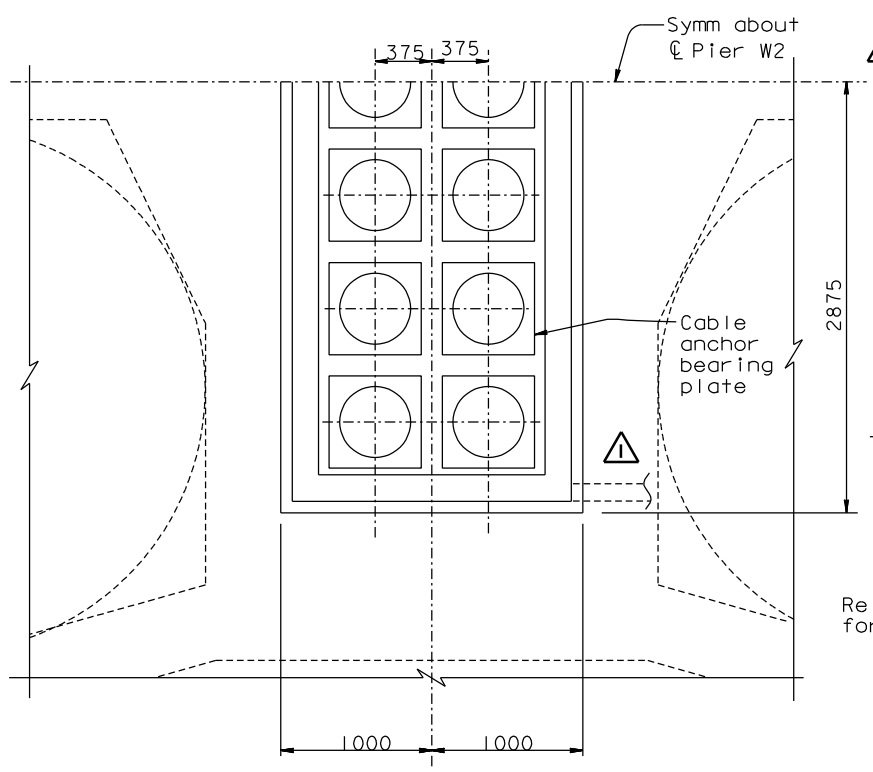


## SECTION F-F
1:25

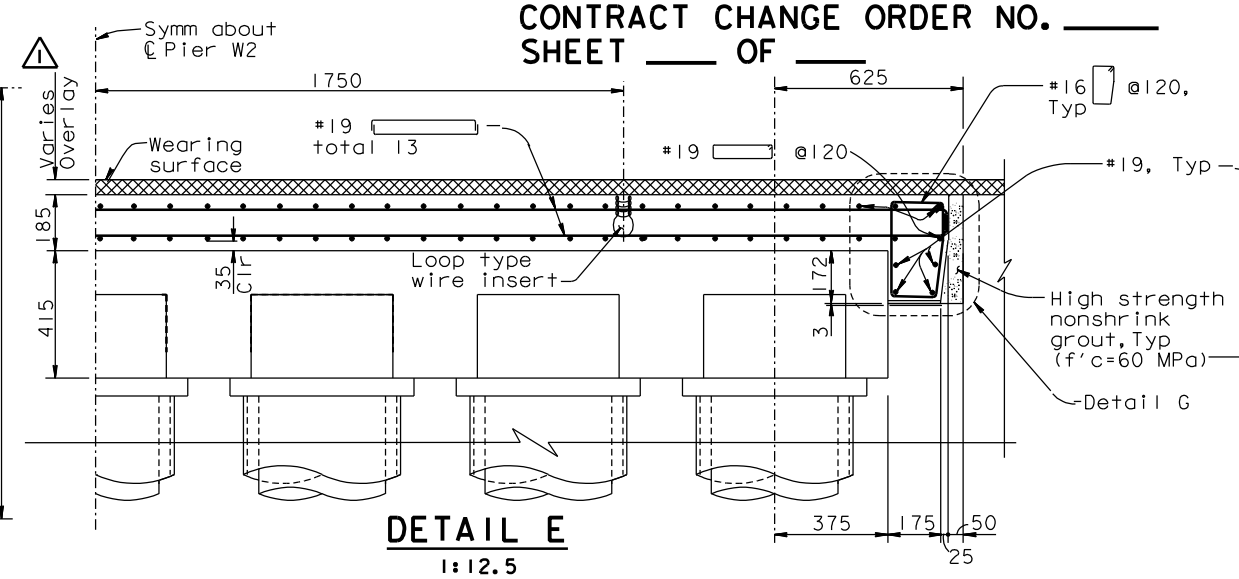


## DETAIL E
1:12.5

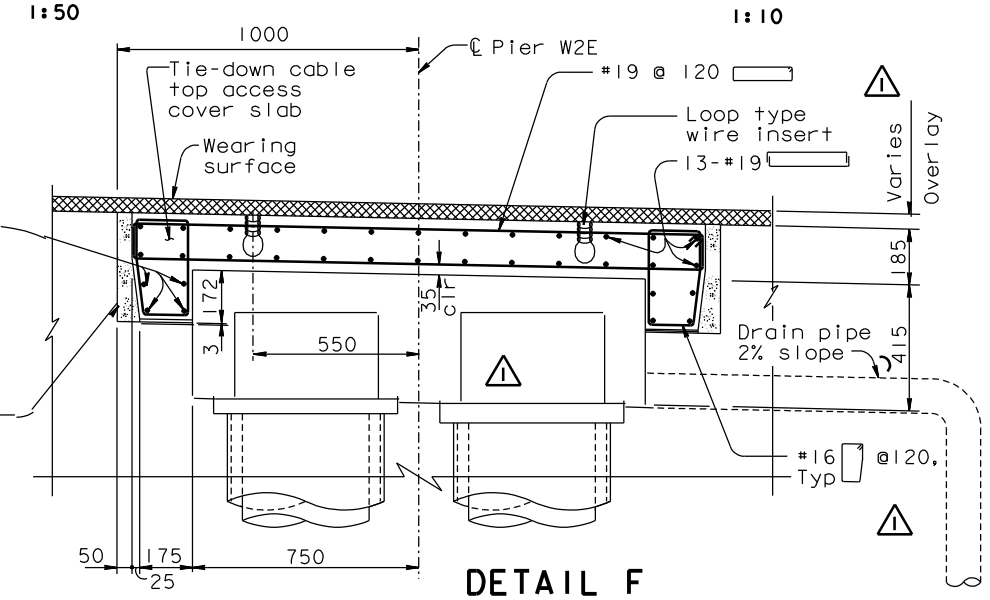


## DETAIL F
1:12.5

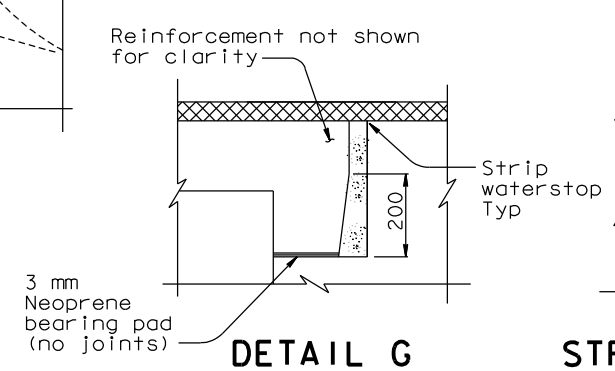


## DETAIL G
1:10

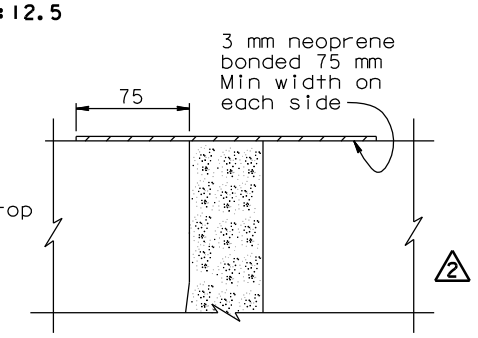


## STRIP WATERSTOP DETAIL
1:2.5

4. Drain pipe shall be spliced to the drain pipe provided by the Self-Anchored Suspension Bridge (W2) Contract (by Others). Drain shall be placed at the low point of the tie-down access. The Contractor may adjust location of the drain inlet to accommodate reinforcement and cap beam postensioning.

5. The steel pipe shall be trimmed down 50 mm above the pier top slab.

NOTES:

1. For additional details, see "Cable Tie-down Details No.1" sheet.
2. Concrete for the precast slab should be f'c=60 MPa at 28 days.
3. Steel pipe shall be ASTM A709 M Grade 345 unless specified otherwise. The Contractor may substitute the Steel Pipe OD=508 with a PT supplier recommended pipe to suit his erection means and methods, subject to review and approval of the Engineer.

ALL DIMENSIONS ARE IN MILLIMETERS UNLESS OTHERWISE SHOWN

R. Valizadeh/V. Toan/Y.L./W.L./F.C.
DESIGN OVERSIGHT
SIGN OFF DATE 04/02/07

| | BY | CHECKED |
|---|---|---|
| DESIGN | J. Sun | J. Straski |
| DETAILS | S. Shi | J. Straski |
| QUANTITIES | J. Duxbury | S. Shi |

PREPARED FOR THE STATE OF CALIFORNIA DEPARTMENT OF TRANSPORTATION

R. Manzanarez
PROJECT ENGINEER

BRIDGE NO. 34-0006L/R
KILOMETER POST 13.2/13.9

SAN FRANCISCO OAKLAND BAY BRIDGE
EAST SPAN SEISMIC SAFETY PROJECT
SELF-ANCHORED SUSPENSION BRIDGE (SUPERSTRUCTURE & TOWER)

# CABLE TIE-DOWN DETAILS NO. 3

Rev. Date: 5-18-98

ORIGINAL SCALE IN MILLIMETERS FOR REDUCED PLANS 0 10 20 30 40 50 60 70 80 90 100

CU 04
EA 0120F1

DISREGARD PRINTS BEARING EARLIER REVISION DATES

REVISION DATES (PRELIMINARY STAGE ONLY) 05/15/99 08/02/99 05/31/01 04/08/02 07/01/02 12/19/02 12/07/05

SHEET 105R2 OF

FILE => I:\bb\04-012001\sas\contract plans and cco\cco\in progress\cco#40\caeptd03.dgn

USERNAME => dwinrow DATE PLOTTED => 05 APR 2007 TIME PLOTTED => 14:17:00

100 % PS&E