STATE OF CALIFORNIA - DEPARTMENT OF TRANSPORTATION

CONTRACT CHANGE ORDER

Change Requested by: Engineer

CCO: 40	Suppl. No. 0	Contract No. 04 - 0120F4	Road SF-80-13.2/13.9	FED. AID LOC.:

To: **AMERICAN BRIDGE/FLUOR ENTERPRISES INC A JOINT VENT**

You are directed to make the following changes from the plans and specifications or do the following described work not included in the plans and specifications for this contract. ***NOTE: This change order is not effective until approved by the Engineer.***

Description of work to be done, estimate of quantities and prices to be paid. (Segregate between additional work at contract price, agreed price and force account.) Unless otherwise stated, rates for rental of equipment cover only such time as equipment is actually used and no allowance will be made for idle time. This last percentage shown is the net accumulated increase or decrease from the original quantity in the Engineer's Estimate.

Adjustment of Compensation at Lump Sum:

Reimburse the Contractor for additional costs associated with the Pier W2 cable tie-down as shown on Sheets 2 and 3 of this change order.

The following revised sheets detail all changes:

Revised Contract Plan Sheet Nos. 450R2 and 522R2 (of 1204).

This change order resolves Contractor Request For Information (RFI) Nos. 380, 380R1 and 600 with respect to changes to the above referenced sheets.

For this work the Contractor shall receive and accept the sum of $9,231.00. This sum constitutes full and complete compensation for furnishing all labor, material, tools and incidentals including all markups by reason of this Change.

There is no adjustment of contract time for this change.

Cost of Adjustment of Compensation at Lump Sum $9,231.00

Estimated Cost: Increase ☑ Decrease ☐ **$9,231.00**

By reason of this order the time of completion will be adjusted as follows: 0 days

Submitted by		
Signature Gilel Klebanov	Resident Engineer Gil Klebanov for Gary Pursell, P.E., Sup.T.E.	Date 1/14/2008
Approval Recommended by		
Signature RC / MW	Supervising Bridge Engineer Richard Morrow, P.E., Sup. BE	Date 1/22/08
Engineer Approval by		
Signature Gary Pursell	Supervising Transportation Engineer Gary Pursell, P.E., Sup. TE	Date 2/27/08

We the undersigned contractor, have given careful consideration to the change proposed and agree, if this proposal is approved, that we will provide all equipment, furnish the materials, except as may otherwise be noted above, and perform all services necessary for the work above specified, and will accept as full payment therefor the prices shown above.

NOTE: If you, the contractor, do not sign acceptance of this order, your attention is directed to the requirements of the specifications as to proceeding with the ordered work and filing a written protest within the time therein specified.

Contractor Acceptance by		
Signature Michael D. Flowers	(Print name and title) Michael D. Flowers Project Director	Date 2-14-08

DIST.	COUNTY	ROUTE	KILOMETER POST TOTAL PROJECT	SHEET NO.	TOTAL SHEETS
04	SF	80	13.2/13.9	450R2	1204

REGISTERED ENGINEER - CIVIL

12-6-04
PLANS APPROVAL DATE

REGISTERED PROFESSIONAL ENGINEER John Sun No. C 54648 Exp. 12/31/05 CIVIL STATE OF CALIFORNIA

The State of California or its officers or agents shall not be responsible for the accuracy or completeness of electronic copies of this plan sheet.

T.Y. LIN / MOFFATT & NICHOL
825 BATTERY STREET
SAN FRANCISCO, CA 94111

Caltrans now has a web site! To get to the web site, go to: http://www.dot.ca.gov

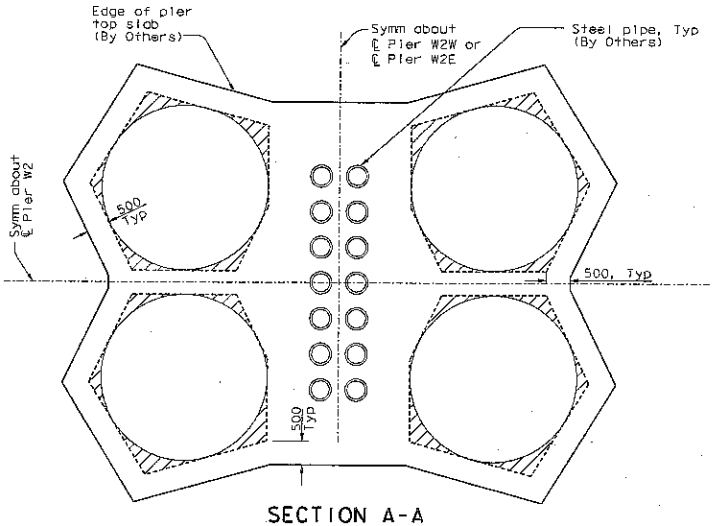

SECTION A-A
1:50

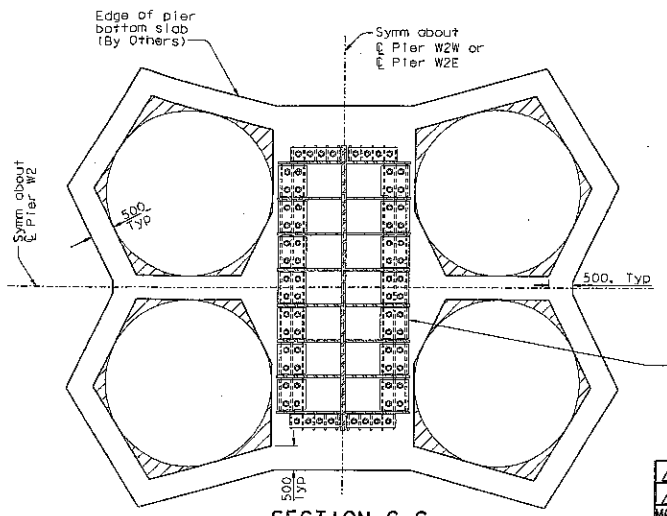

SECTION C-C
1:50

LEGEND:
Indicates 100 recess

FOR REVISIONS ONLY

PROFESSIONAL ENGINEER Jim Shen Duxbury No. C 54677 Exp. 06/30/07 CIVIL STATE OF CALIFORNIA

MARK	DATE	DESCRIPTIONS	BY	CH'D	CCO#
2	04/02/07	CABLE TIE-DOWN	JD	AS	40
1	01/21/06	W2 CAP BEAM ISD	JD	NV	23

REVISIONS

CONTRACT CHANGE ORDER NO. 40
SHEET 2 OF 3

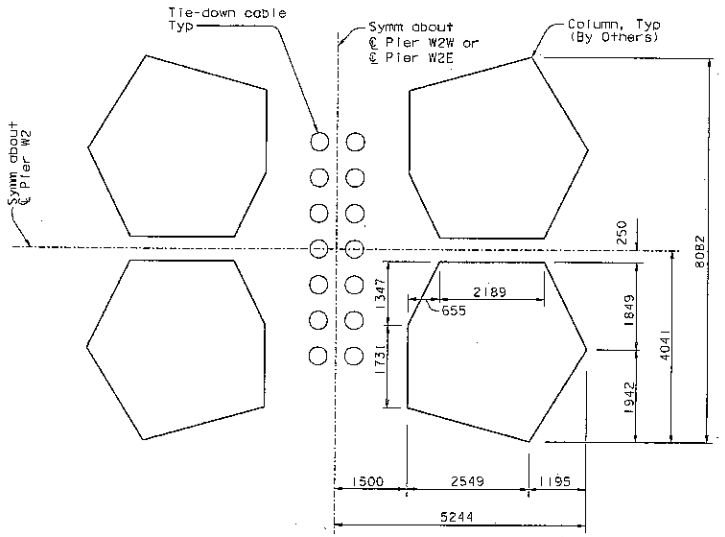

SECTION B-B
1:50

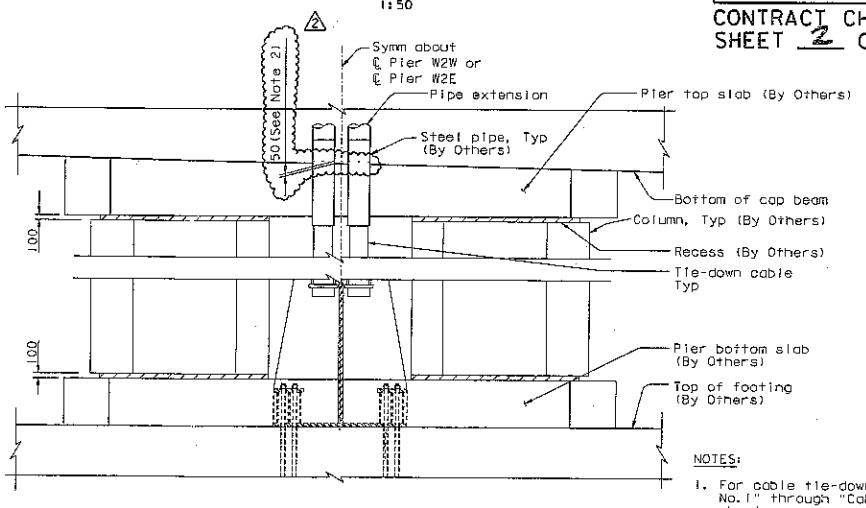

SECTION D-D
1:50

NOTES:

1. For cable tie-down, see "Cable Tie-Down Details No.1" through "Cable Tie-Down Details No.4" sheets. 1
2. 2 The steel pipe shall be trimmed down 50 mm above the pier top slab.

ALL DIMENSIONS ARE IN MILLIMETERS UNLESS OTHERWISE SHOWN

R. Vollzadeh/V. Ipan/Y.L./W.L./F.C.
DESIGN OVERSIGHT
Roy Vollzadeh / Vonn Ipan / Y. Liu
SIGN OFF DATE 04/02/07
Rev. Date: 5-10-05

RECEIVED JAN 22 2008 ABF

	BY	CHECKED
DESIGN	J. Sun	J. Leventini
DETAILS	J. Duxbury	J. Leventini
QUANTITIES	J. Duxbury	S. Shi

PREPARED FOR THE STATE OF CALIFORNIA DEPARTMENT OF TRANSPORTATION

R. Manzanarez
PROJECT ENGINEER

BRIDGE NO. 34-0006L/R
KILOMETER POST 13.2/13.9

SAN FRANCISCO OAKLAND BAY BRIDGE
EAST SPAN SEISMIC SAFETY PROJECT
SELF-ANCHORED SUSPENSION BRIDGE
(SUPERSTRUCTURE & TOWER)

PIER W2 DETAILS NO. 4

ORIGINAL SCALE IN MILLIMETERS FOR REDUCED PLANS 0 10 20 30 40 50 60 70 80 90 100

CU 04
EA 0120F1

DISREGARD PRINTS BEARING EARLIER REVISION DATES

REVISION DATES (PRELIMINARY STAGE ONLY)
01/21/06 03/29/06 05/09/06 10/20/06 12/06/06 12/12/06

SHEET 33R2 OF

FILE => I:\bb\04-01200\sas\contract plans and cco\cco\in progress\cco#40\cosp1rb2.dgn

100 % PS&E

USERNAME => GetFrom DATE PLOTTED => 05 APR 2007 TIME PLOTTED => 13:41:50

DIST.	COUNTY	ROUTE	KILOMETER POST TOTAL PROJECT	SHEET NO.	TOTAL SHEETS
04	SF	80	13.2/13.9	522R2	1204

REGISTERED ENGINEER - CIVIL

12-6-04
PLANS APPROVAL DATE

REGISTERED PROFESSIONAL ENGINEER John Sun No. C 54648 Exp. 12/31/05 CIVIL STATE OF CALIFORNIA

The State of California or its officers or agents shall not be responsible for the accuracy or completeness of electronic copies of this plan sheet.

T.Y. LIN / MOFFATT & NICHOL
825 BATTERY STREET
SAN FRANCISCO, CA 94111

Caltrans now has a web site! To get to the web site, go to: http://www.dot.ca.gov

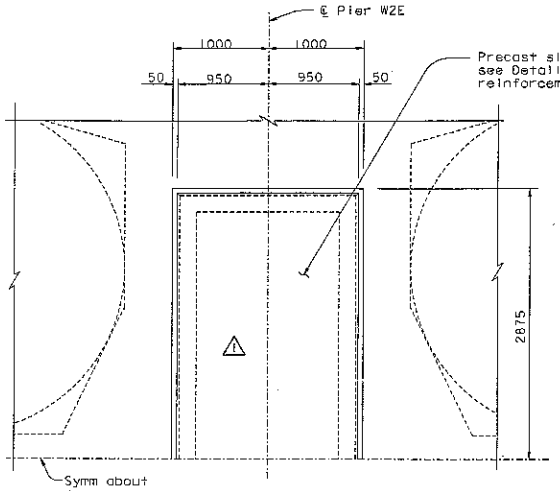

SECTION E-E
1:25

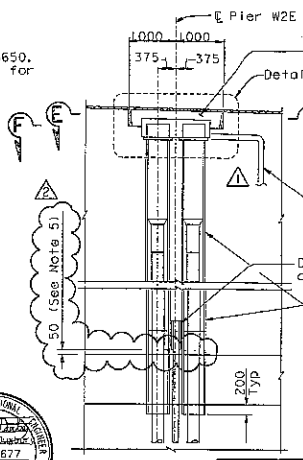

DETAIL A
1:50

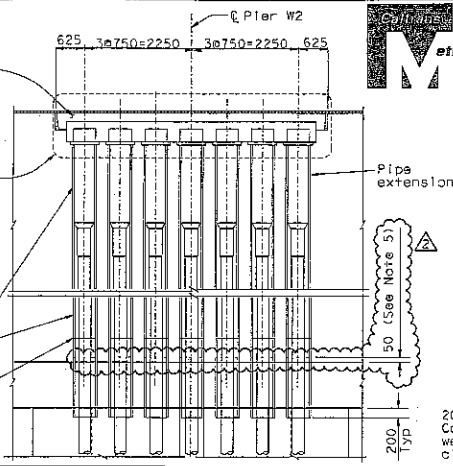

DETAIL B
1:50

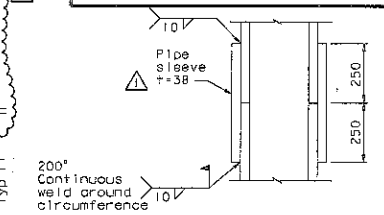

ALTERNATE CONNECTION FOR STEEL PIPE
1:10

FOR REVISIONS ONLY

MARK	DATE	DESCRIPTIONS	BY	CH'D	CCO#
2	04/02/07	CABLE TIE-DOWN	JD	AS	40
1	07/21/06	W2 CAP BEAM ISD	JD	NV	23

REVISIONS

CONTRACT CHANGE ORDER NO. 40
SHEET 3 OF 3

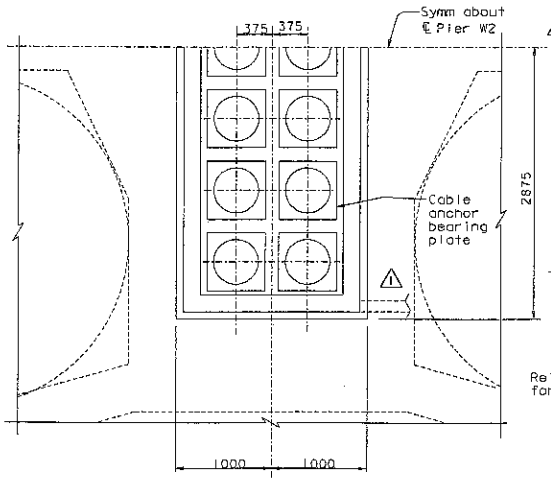

SECTION F-F
1:25

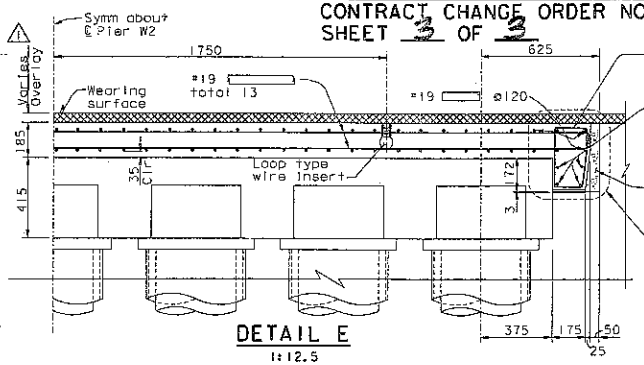

DETAIL E
1:12.5

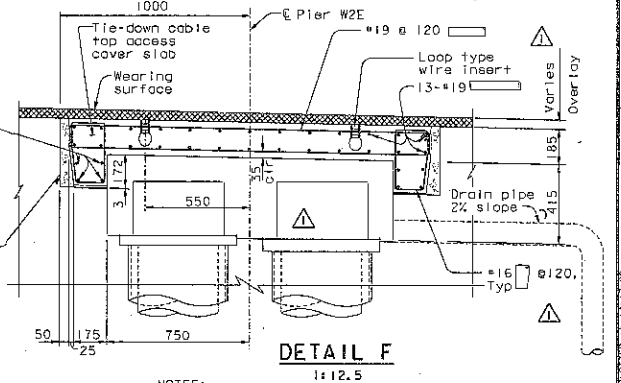

DETAIL F
1:12.5

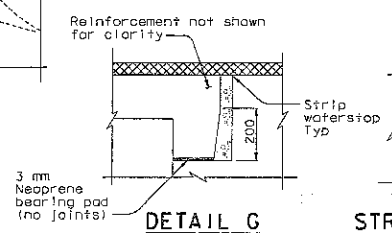

DETAIL G
1:10

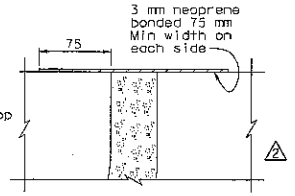

STRIP WATERSTOP DETAIL
1:2.5

4. Drain pipe shall be spliced to the drain pipe provided by the Self-Anchored Suspension Bridge (W2) Contract (by Others). Drain shall be placed at the low point of the tie-down access. The Contractor may adjust location of the drain inlet to accommodate reinforcement and cap beam postensioning.

5. The steel pipe shall be trimmed down 50 mm above the pier top slab.

NOTES:

1. For additional details, see "Cable Tie-down Details No. 1" sheet.
2. Concrete for the precast slab should be f'c=60 MPa at 28 days.
3. Steel pipe shall be ASTM A709 M Grade 345 unless specified otherwise. The contractor may substitute the Steel Pipe OD=508 with a PT supplier recommended pipe to suit his erection means and methods, subject to review and approval of the Engineer.

ALL DIMENSIONS ARE IN MILLIMETERS UNLESS OTHERWISE SHOWN

SAN FRANCISCO OAKLAND BAY BRIDGE
EAST SPAN SEISMIC SAFETY PROJECT
SELF-ANCHORED SUSPENSION BRIDGE
(SUPERSTRUCTURE & TOWER)

CABLE TIE-DOWN DETAILS NO. 3

R. Vallzadeh/V. Toon/Y. L./W. L./F. C.
DESIGN OVERSIGHT
Roy Vallzadeh / Vangi Toon / Y. Lin
SIGN OFF DATE 04/02/07

RECEIVED JAN 22 2008 ABF

	BY	CHECKED
DESIGN	J. Sun	J. Stroski
DETAILS	S. Shi	J. Stroski
QUANTITIES	J. Duxbury	S. Shi

PREPARED FOR THE STATE OF CALIFORNIA DEPARTMENT OF TRANSPORTATION

R. Manzanarez
PROJECT ENGINEER

BRIDGE NO. 34-0006L/R
KILOMETER POST 13.2/13.9

CU 04
EA 012DF1

DISREGARD PRINTS BEARING EARLIER REVISION DATES

REVISION DATES (PRELIMINARY STAGE ONLY)

SHEET 105R2 OF

Rev. Date 5-15-98

ORIGINAL SCALE IN MILLIMETERS FOR REDUCED PLANS 0 10 20 30 40 50 60 70 80 90 100

FILE => I:\DS\04-0\2001\sds\contract plans and ccs\ccs\in progress\cco#40\coedtdb3.dgn

100 % PS&E

DESIGNER => CWATSON DATE PLOTTED => 05-MAR-2007 TIME PLOTTED => 13:47:00