DIST.	COUNTY	ROUTE	KILOMETER POST TOTAL PROJECT	SHEET NO.	TOTAL SHEETS
04	SF	80	13.2/13.9	639R1	1204

Caltrans Metric

George Baker
REGISTERED ENGINEER - CIVIL

12-6-04
PLANS APPROVAL DATE

REGISTERED PROFESSIONAL ENGINEER George S. Baker No. C57112 Exp. 12/31/05 CIVIL STATE OF CALIFORNIA

The State of California or its officers or agents shall not be responsible for the accuracy or completeness of electronic copies of this plan sheet.

T.Y. LIN / MOFFATT & NICHOL
825 BATTERY STREET
SAN FRANCISCO, CA 94111

Caltrans now has a web site! To get to the web site, go to: http://www.dot.ca.gov

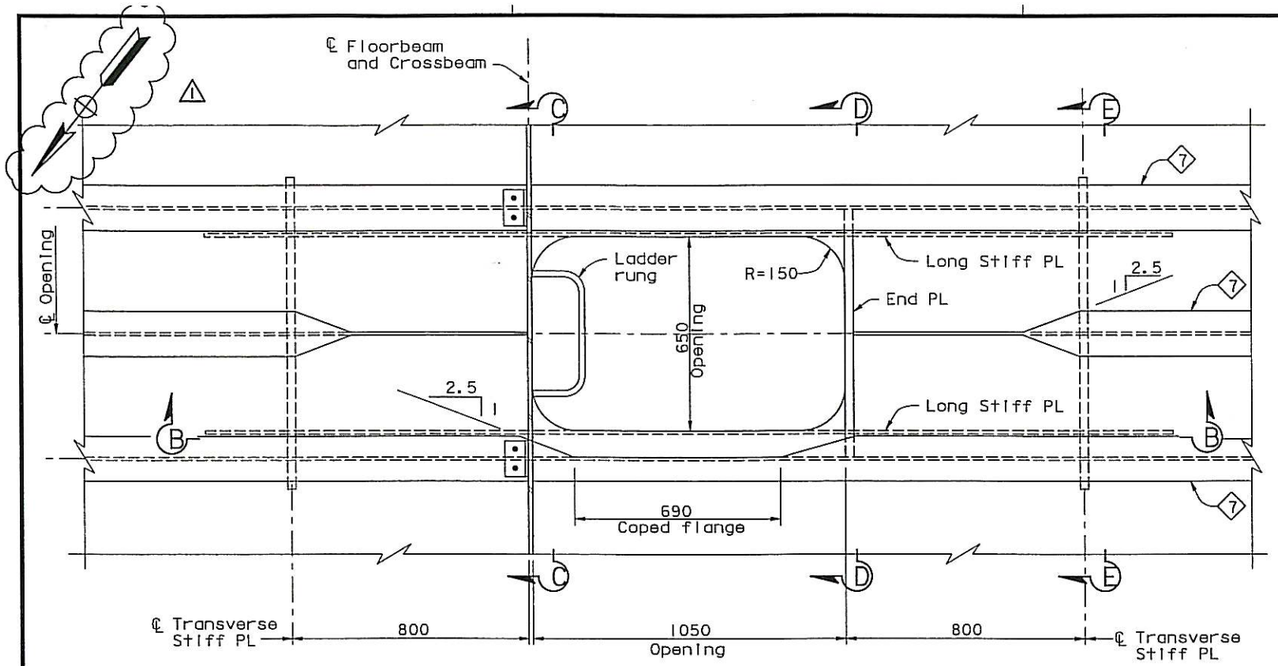

GIRDER ACCESS OPENING AT CROSSBEAM (Applies at all Crossbeams)

PLAN SECTION A-A (Note North Arrow)
1:10

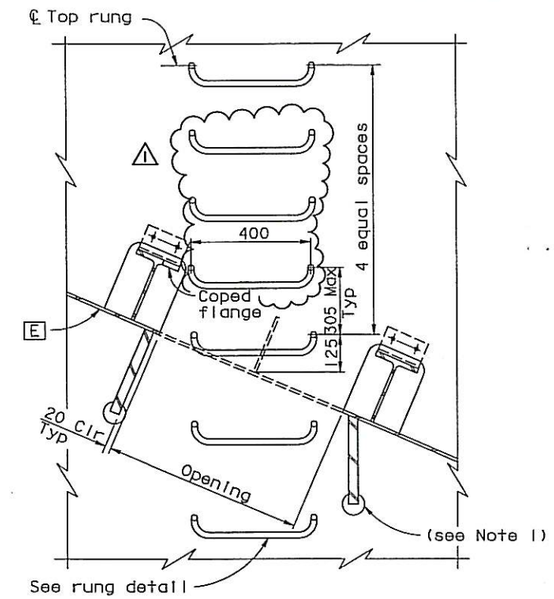

SECTION C-C
1:10

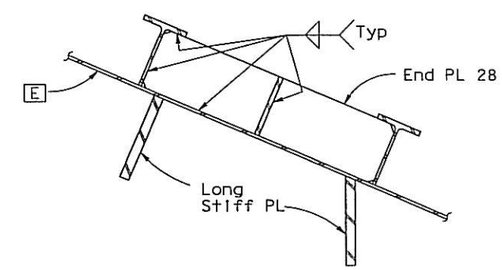

SECTION D-D
1:10

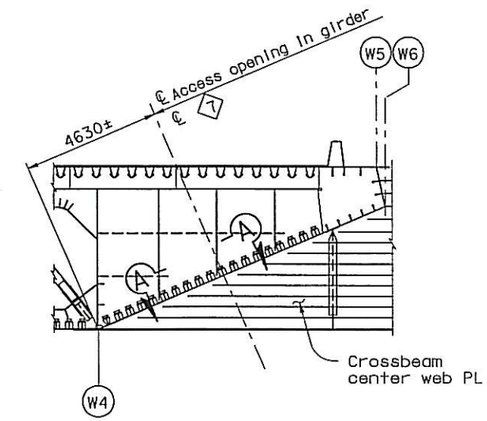

KEY SECTION
NTS

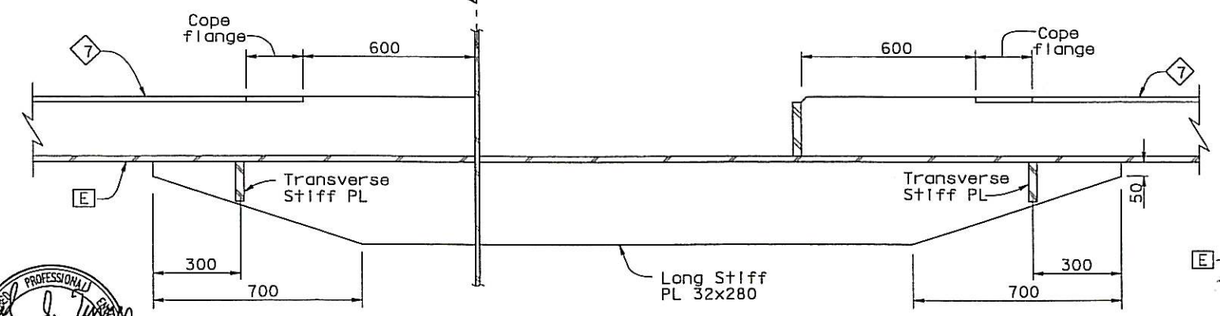

SECTION B-B
1:10

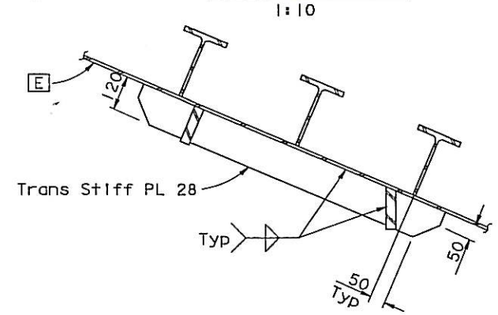

SECTION E-E
1:10

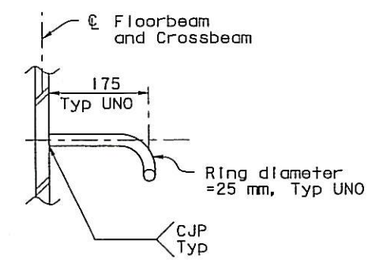

STANDARD MODIFIED RUNG DETAIL
1:5
(see Note 2)

NOTES:

1. For detail, see stiffener 7 Detail B, Type 2 & 3 opening, plate type on "Typical Girder Details No. 6" sheet.
2. For ladder rung details not shown, see B7-11 / U-44

100 % PS&E

REGISTERED PROFESSIONAL ENGINEER Daniel J. Turner No. C 65033 Exp. 06/30/07 CIVIL STATE OF CALIFORNIA

FOR REVISIONS ONLY

MARK	DATE	DESCRIPTIONS	BY	CH'D	CCO#
1	04/02/07	CROSSBEAM KINK	GB	DT	38

REVISIONS

CONTRACT CHANGE ORDER NO. _____
SHEET ____ OF ____

ALL DIMENSIONS ARE IN MILLIMETERS UNLESS OTHERWISE SHOWN

R. Valizadeh/V. Toan/Y. L./W. L./F. C.
DESIGN OVERSIGHT
SIGN OFF DATE 04/02/07

	BY	CHECKED
DESIGN	G. Baker	P. Ritchie
DETAILS	C. Mauch	T. McMeans
QUANTITIES	G. Baker	M. Roberts

PREPARED FOR THE STATE OF CALIFORNIA DEPARTMENT OF TRANSPORTATION

R. Manzanarez
PROJECT ENGINEER

BRIDGE NO. 34-0006L/R
KILOMETER POST 13.2/13.9

SAN FRANCISCO OAKLAND BAY BRIDGE
EAST SPAN SEISMIC SAFETY PROJECT
SELF-ANCHORED SUSPENSION BRIDGE
(SUPERSTRUCTURE & TOWER)

TYPICAL GIRDER DETAILS NO. 15

Rev. Date: 5-18-98

ORIGINAL SCALE IN MILLIMETERS FOR REDUCED PLANS 0 10 20 30 40 50 60 70 80 90 100

CU 04
EA 0120F1

DISREGARD PRINTS BEARING EARLIER REVISION DATES

REVISION DATES (PRELIMINARY STAGE ONLY) 05/31/01 01/08/02 07/31/02 12/15/02

SHEET 222R1 OF

FILE => L:\BB\04-012001\SAS\Contract Plans and CCO\CCO\In Progress\CCO#38\agdkd06a.dgn

DIST.	COUNTY	ROUTE	KILOMETER POST TOTAL PROJECT	SHEET NO.	TOTAL SHEETS
04	SF	80	13.2/13.9	642R1	1204

Daniel J. Turner
REGISTERED PROFESSIONAL ENGINEER
Daniel J. Turner
No. C 65033
Exp. 06/30/07
CIVIL
STATE OF CALIFORNIA

Caltrans Metric

FOR REVISIONS ONLY

George Baker
REGISTERED ENGINEER - CIVIL

12-6-04
PLANS APPROVAL DATE

REGISTERED PROFESSIONAL ENGINEER
George S. Baker
No. C57112
Exp. 12/31/05
CIVIL
STATE OF CALIFORNIA

The State of California or its officers or agents shall not be responsible for the accuracy or completeness of electronic copies of this plan sheet.

T.Y. LIN / MOFFATT & NICHOL
825 BATTERY STREET
SAN FRANCISCO, CA 94111

Caltrans now has a web site! To get to the web site, go to: http://www.dot.ca.gov

MARK	DATE	DESCRIPTIONS	BY	CH'D	CCO#
1	04/02/07	CROSSBEAM KINK	GB	DT	38

REVISIONS

CONTRACT CHANGE ORDER NO. ____
SHEET ____ OF ____

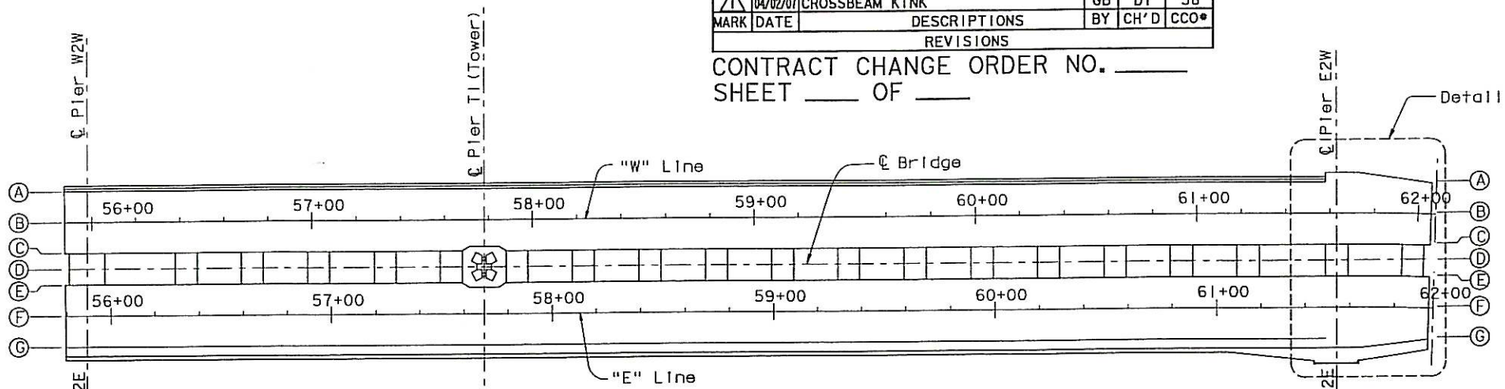

KEY PLAN
1:1500

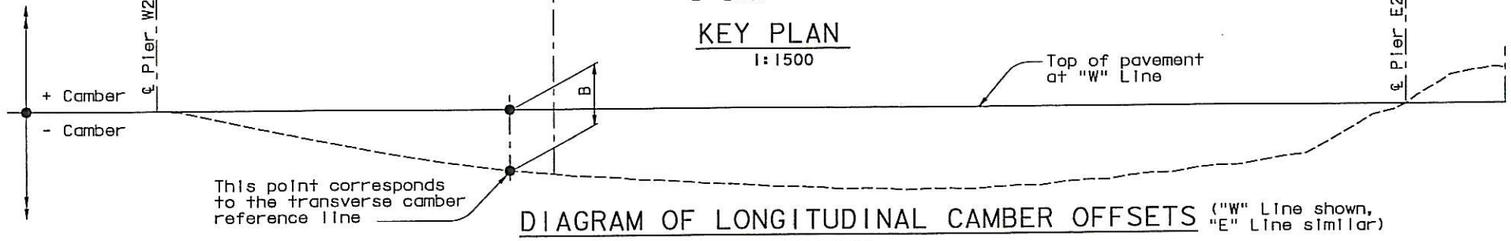

DIAGRAM OF LONGITUDINAL CAMBER OFFSETS ("W" Line shown, "E" Line similar)
NTS

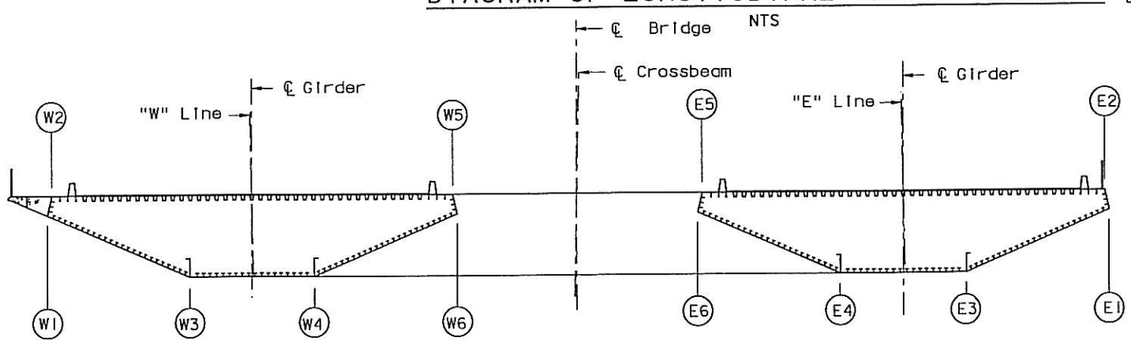

SECTION
1:200

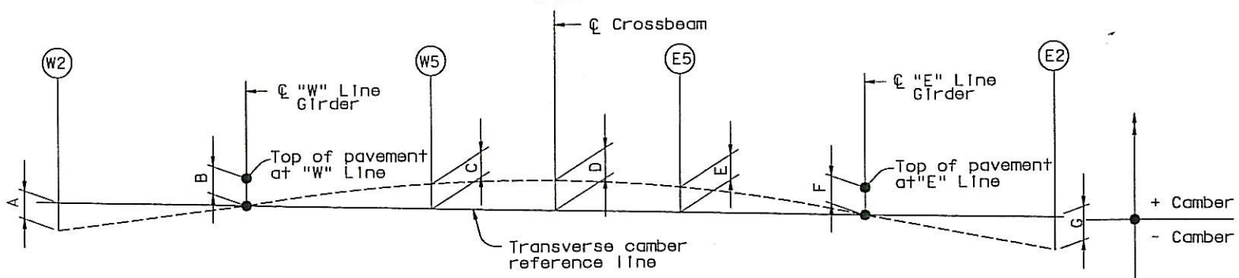

DIAGRAM OF TRANSVERSE CAMBER (EAST OF "E" 57+30)
NTS
(See Note 1)

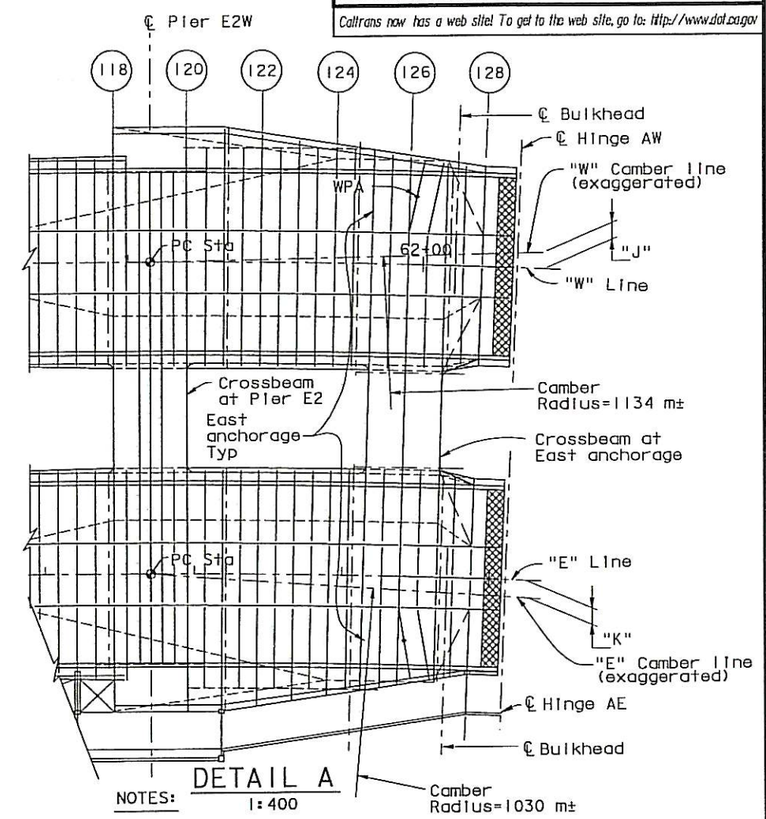

DETAIL A
1:400

NOTES:

1. For camber schedule and notes, see "Camber Schedule" sheet and "Camber Schedule-A" sheet.
2. The box girders shall also be cambered for axial shortening due to dead load. See table 3 on "Camber Schedule-B" sheet.
3. Crossbeams shall also be cambered for axial strain shortening due to dead load between panel points 118 to 127. The E2 cross beam shall be fabricated 7 mm longer than the nominal dimensions. The east anchorage crossbeam shall be fabricated 7 mm shorted than the nominal dimensions.
4. For typical cross beams (when "E" line and "W" line roadway decks lie in the same plane) the kink due to the transverse camber shall be located at the ℄ of the bolted splice.

ALL DIMENSIONS ARE IN MILLIMETERS UNLESS OTHERWISE SHOWN

100 % PS&E

USERNAME => vignatovs DATE PLOTTED => 03 APR 2007 TIME PLOTTED => 15:56:31

SAN FRANCISCO OAKLAND BAY BRIDGE
EAST SPAN SEISMIC SAFETY PROJECT
SELF-ANCHORED SUSPENSION BRIDGE
(SUPERSTRUCTURE & TOWER)

CAMBER DIAGRAM

R. Valizadeh/V. Toan/Y.L./W.L./F.C.
DESIGN OVERSIGHT
Roger Valizadeh / Vong Toan / Y. Liu
SIGN OFF DATE 04/02/07
Rev. Date: 5-18-98

	BY	CHECKED
DESIGN	G. Baker	M. Nader
DETAILS	S. Camo	C. Mibelli
QUANTITIES	G. Baker	C. Mibelli

PREPARED FOR THE
STATE OF CALIFORNIA
DEPARTMENT OF TRANSPORTATION

R. Manzanarez
PROJECT ENGINEER

BRIDGE NO. 34-0006L/R
KILOMETER POST 13.2/13.9

ORIGINAL SCALE IN MILLIMETERS FOR REDUCED PLANS 0 10 20 30 40 50 60 70 80 90 100

CU 04
EA 0120F1

DISREGARD PRINTS BEARING EARLIER REVISION DATES
REVISION DATES (PRELIMINARY STAGE ONLY) 05/19/99 08/02/99 05/31/01 04/08/02 01/01/02 12/19/02

SHEET 225R1 OF

FILE => I:\bb\04-012001\sas\contract plans and cco\cco\in progress\cco#38\agdkd07.dgn

DIST.	COUNTY	ROUTE	KILOMETER POST TOTAL PROJECT	SHEET NO.	TOTAL SHEETS
04	SF	80	13.2/13.9	644R1	1204

Caltrans Metric

George Baker
REGISTERED ENGINEER - CIVIL
12-6-04
PLANS APPROVAL DATE

REGISTERED PROFESSIONAL ENGINEER George S. Baker No. C57112 Exp. 12/31/05 CIVIL STATE OF CALIFORNIA

The State of California or its officers or agents shall not be responsible for the accuracy or completeness of electronic copies of this plan sheet.

T.Y. LIN / MOFFATT & NICHOL
825 BATTERY STREET
SAN FRANCISCO, CA 94111

Caltrans now has a web site! To get to the web site, go to: http://www.dot.ca.gov

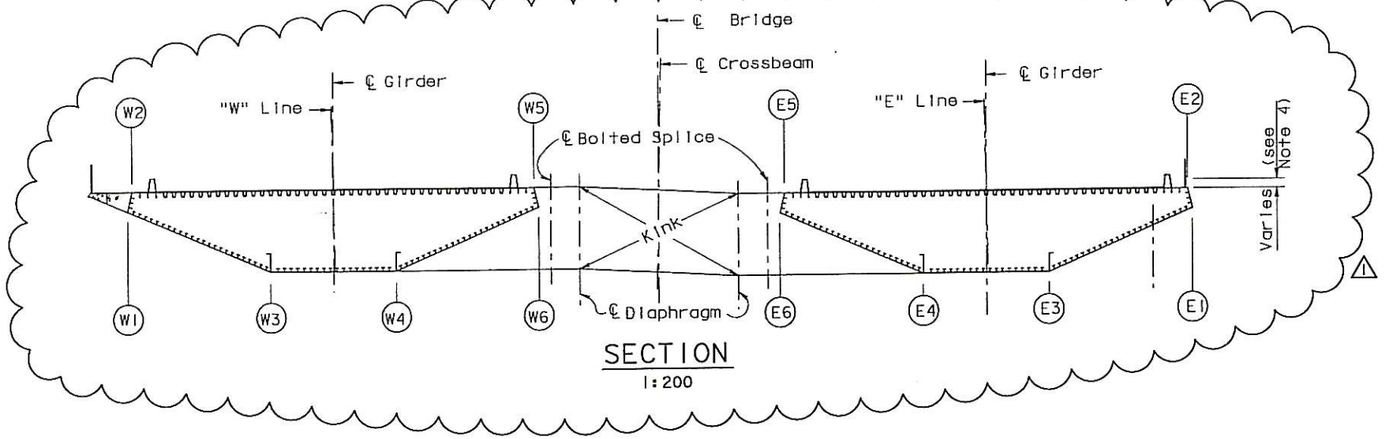

SECTION
1:200

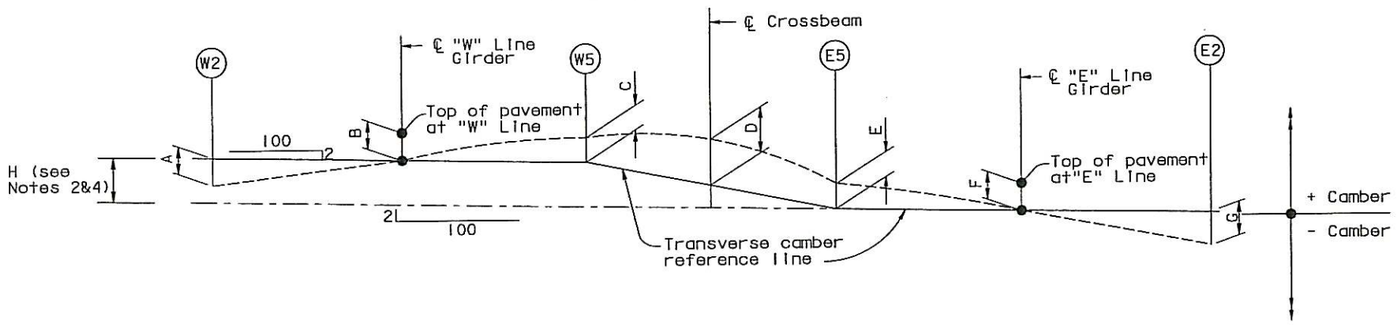

DIAGRAM OF TRANSVERSE CAMBER OFFSETS (West of "E" 57+30)

NTS

Table 2: Transverse Dead Load Camber Offsets

PANEL POINT	A	C	D	E	G
8	0	0	0	0	0
15-111	-50	50	50	50	-50
119	0	0	0	0	0
126	0	0	0	0	0
Hinge A	0	0	NA	0	0

Daniel J. Turner
REGISTERED PROFESSIONAL ENGINEER Daniel J. Turner No. C 65033 Exp. 06/30/07 CIVIL STATE OF CALIFORNIA

FOR REVISIONS ONLY

MARK	DATE	DESCRIPTIONS	BY	CH'D	CCO#
1	04/02/07	CROSSBEAM KINK	GB	DT	38

REVISIONS

CONTRACT CHANGE ORDER NO. ____
SHEET ____ OF ____

NOTES:

1. For panel point locations not given the camber offsets shall vary linearly between the tabulated values.
2. Dimension "H" varies due to the differing EB and WB vertical curves. "H" is taken to be zero east of "E" 57+30.
3. No additional live load camber is required for the transverse or axial directions.
4. To account for differences in alignment in "E" line and "W" line roadway profiles (which result in a kink and/or twist in crossbeams) for crossbeams at PP 14 to 28, the kink shall be located at the first diaphragm interior to the bolted splice. For details see "Typical Crossbeam Details No. 4" sheet. Crossbeam at East Anchorage is similar. (1)

100% PS&E

ALL DIMENSIONS ARE IN MILLIMETERS UNLESS OTHERWISE SHOWN

SAN FRANCISCO OAKLAND BAY BRIDGE
EAST SPAN SEISMIC SAFETY PROJECT
SELF-ANCHORED SUSPENSION BRIDGE
(SUPERSTRUCTURE & TOWER)

CAMBER SCHEDULE-A

R. Vallzadeh/V. Toan/Y.L./W.L./F.C.
DESIGN OVERSIGHT
SIGN OFF DATE 04/02/07

	BY	CHECKED
DESIGN	G. Baker	P. Ritchie
DETAILS	S. Camo	T. McMeans
QUANTITIES	G. Baker	M. Roberts

PREPARED FOR THE STATE OF CALIFORNIA DEPARTMENT OF TRANSPORTATION

R. Manzanarez
PROJECT ENGINEER

BRIDGE NO. 34-0006L/R
KILOMETER POST 13.2/13.9

CU 04
EA 0120F1

DISREGARD PRINTS BEARING EARLIER REVISION DATES 01/18/03

REVISION DATES (PRELIMINARY STAGE ONLY)

SHEET 227R1 OF

ORIGINAL SCALE IN MILLIMETERS FOR REDUCED PLANS 0 10 20 30 40 50 60 70 80 90 100

Rev. Date: 5-18-98

FILE => I:\bb\04-01200I\sas\contract plans and cco\cco\in progress\cco#38\ggdkd08a.dgn

USERNAME => vlignatova DATE PLOTTED => 27 MAR 2007 TIME PLOTTED => 10:27:26

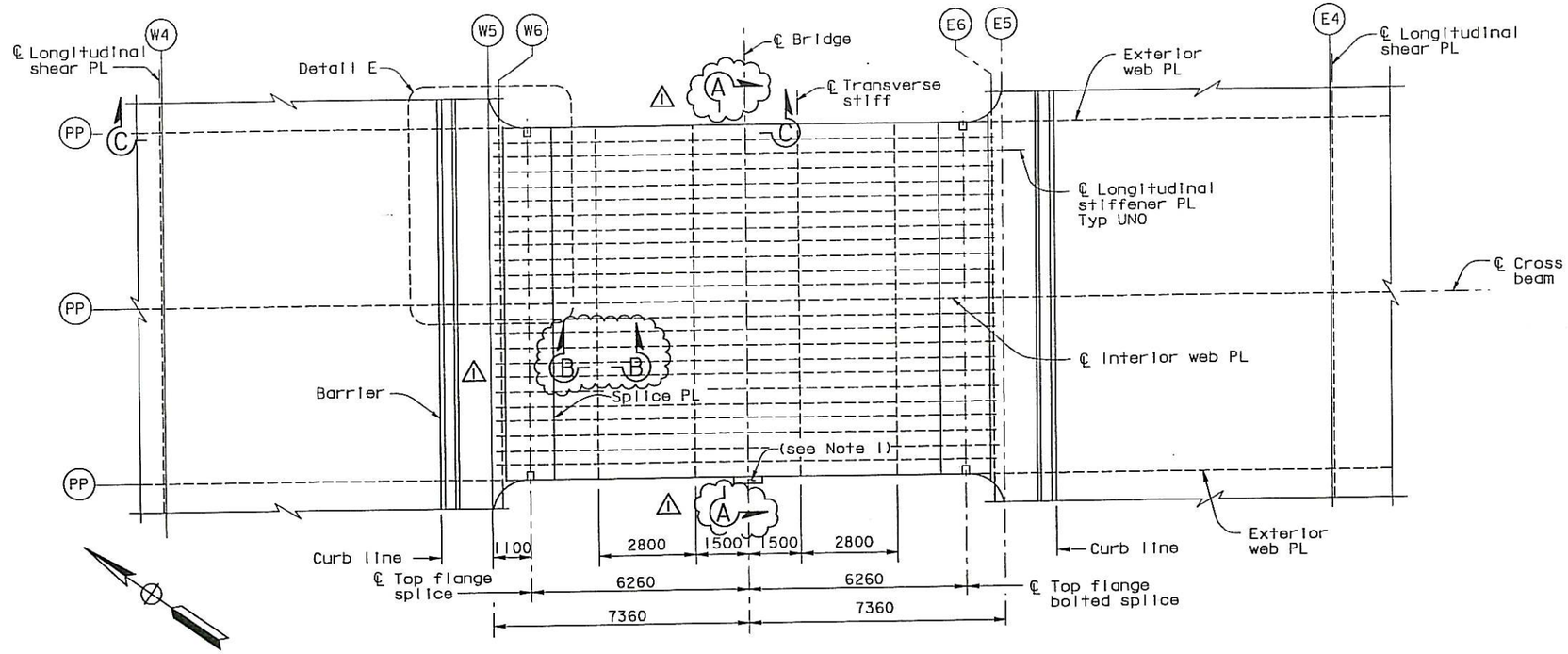

TOP PLAN OF CROSSBEAM

1:80

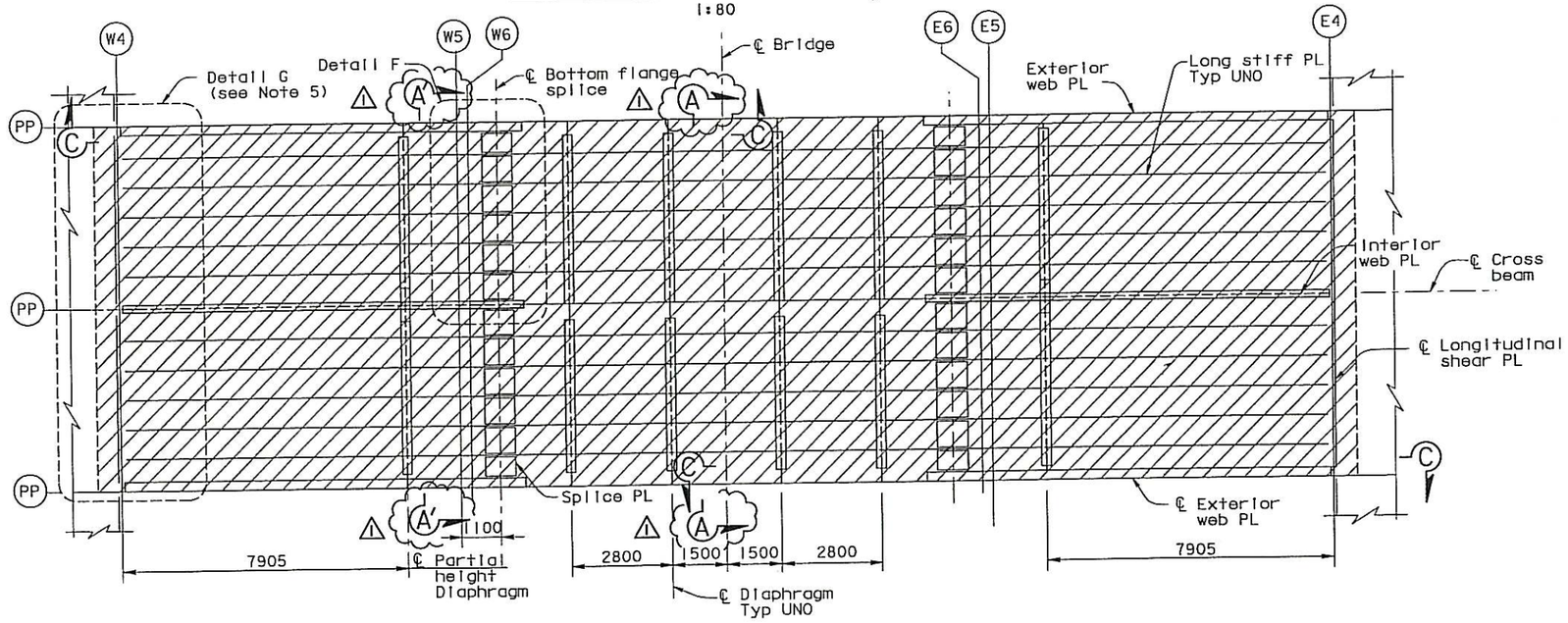

BOTTOM PLAN OF CROSSBEAM

1:80

DIST.	COUNTY	ROUTE	KILOMETER POST TOTAL PROJECT	SHEET NO.	TOTAL SHEETS
04	SF	80	13.2/13.9	655R1	1204

Caltrans Metric

George Baker
REGISTERED ENGINEER - CIVIL

1-27-03
PLANS APPROVAL DATE

The State of California or its officers or agents shall not be responsible for the accuracy or completeness of electronic copies of this plan sheet.

REGISTERED PROFESSIONAL ENGINEER George S. Baker No. C57112 Exp. 12/31/05 CIVIL STATE OF CALIFORNIA

T.Y. LIN / MOFFATT & NICHOL
825 BATTERY STREET
SAN FRANCISCO, CA 94111

To get to the web site, go to http://www.dot.ca.gov

REGISTERED PROFESSIONAL ENGINEER Daniel J. Turner No. C 65033 Exp. 06/30/07 CIVIL STATE OF CALIFORNIA

FOR REVISIONS ONLY

MARK	DATE	DESCRIPTIONS	BY	CH'D	CCO#
1	04/02/07	CROSSBEAM KINK	GB	DT	38

REVISIONS

CONTRACT CHANGE ORDER NO. ____
SHEET ____ OF ____

LEGEND:

"Indicates SPCM shell plate"

NOTES:

1. For girder access locations, see "Girder Access Details" sheets.
2. For Section C-C, see "Typical Crossbeam Details No. 5" sheet.
3. For Detail E, see "Typical Crossbeam Details No. 7" sheet.
4. For Detail F, see "Typical Crossbeam Details No. 8" sheet.
5. For Detail G, see "Typical Crossbeam Details No. 9" sheet.
6. For "Typical Crossbeam Details" sheets, all bolts shall be detailed according to the bolt dimension table. See "Typical Girder Details No. 1" sheet. All bolts are HS UNO.
7. For "Typical Crossbeam Details" sheets UNO all fillet welds shall be 6 mm for plate sizes not greater than 20 mm. For plates greater than 20 mm fillet welds shall be 8 mm UNO.
8. For Sections A-A and A'-A', see "Typical Crossbeam Details No. 2" sheet.
9. For Section B-B, see "Typical Crossbeam Details No. 4" sheet.

100 % PS&E

USERNAME => vignatovsky DATE PLOTTED => 27 MAR 2007 TIME PLOTTED => 10:31:32

ALL DIMENSIONS ARE IN MILLIMETERS UNLESS OTHERWISE SHOWN

SAN FRANCISCO OAKLAND BAY BRIDGE
EAST SPAN SEISMIC SAFETY PROJECT
SELF-ANCHORED SUSPENSION BRIDGE
(SUPERSTRUCTURE & TOWER)

TYPICAL CROSSBEAM DETAILS NO. 1

R. Valizadeh/V. Toan/Y.L./W.L./F.C.
DESIGN OVERSIGHT
SIGN OFF DATE 04/02/07
Rev. Date: 5-18-98

	BY	CHECKED
DESIGN	G. Baker	P. Ritchie
DETAILS	D. Veytsman	T. McMeans
QUANTITIES	G. Baker	M. Roberts

ORIGINAL SCALE IN MILLIMETERS FOR REDUCED PLANS 0 10 20 30 40 50 60 70 80 90 100

PREPARED FOR THE STATE OF CALIFORNIA DEPARTMENT OF TRANSPORTATION

R. Manzanarez
PROJECT ENGINEER

BRIDGE NO. 34-0006L/R
KILOMETER POST 13.2/13.9

CU 04
EA 0120F1

DISREGARD PRINTS BEARING EARLIER REVISION DATES

REVISION DATES (PRELIMINARY STAGE ONLY) 05/15/99 08/06/99 05/31/01 04/06/02 07/01/02 12/19/02

SHEET 238R1 OF

FILE => I:\bb\04-012001\sas\contract plans and cco\cco\in progress\cco#38\agcrs01.dgn

DIST.	COUNTY	ROUTE	KILOMETER POST TOTAL PROJECT	SHEET NO.	TOTAL SHEETS
04	SF	80	13.2/13.9	656R2	1204

George Baker
REGISTERED ENGINEER - CIVIL
1-27-03
PLANS APPROVAL DATE

REGISTERED PROFESSIONAL ENGINEER George S. Baker No. C57112 Exp. 12/31/05 CIVIL STATE OF CALIFORNIA

The State of California or its officers or agents shall not be responsible for the accuracy or completeness of electronic copies of this plan sheet.

T.Y. LIN / MOFFATT & NICHOL
825 BATTERY STREET
SAN FRANCISCO, CA 94111

To get to the web site, go to http://www.dot.ca.gov

Caltrans Metric

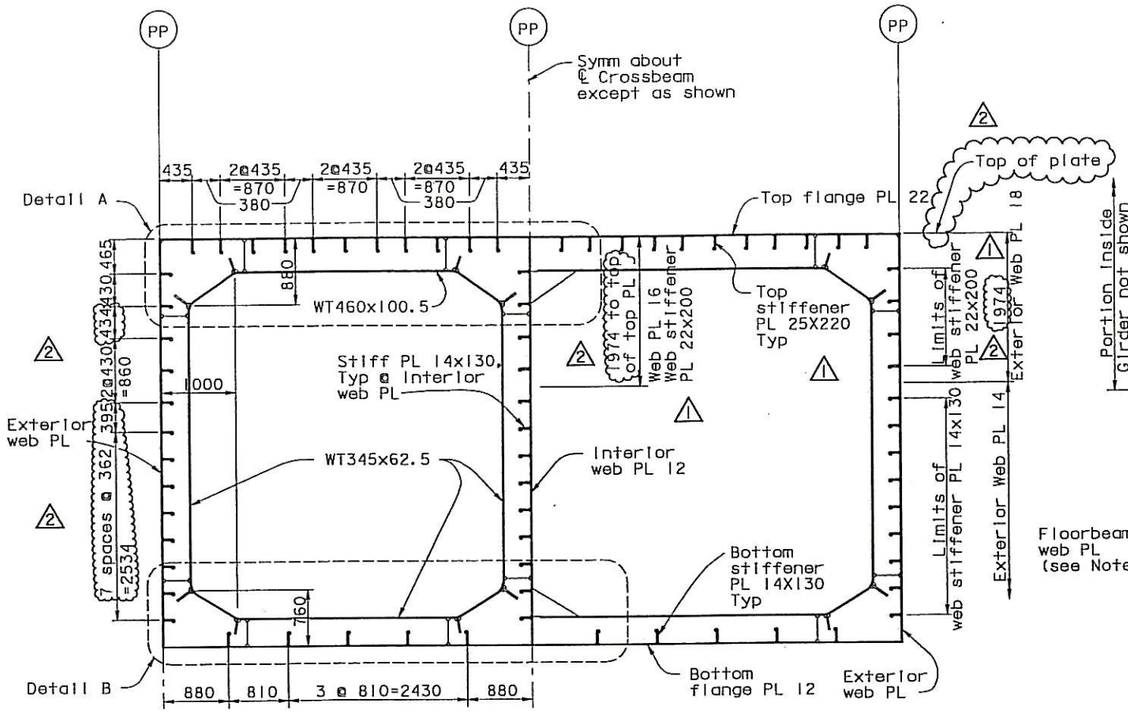

TYPICAL DIAPHRAGM
SECTION A-A
1:40

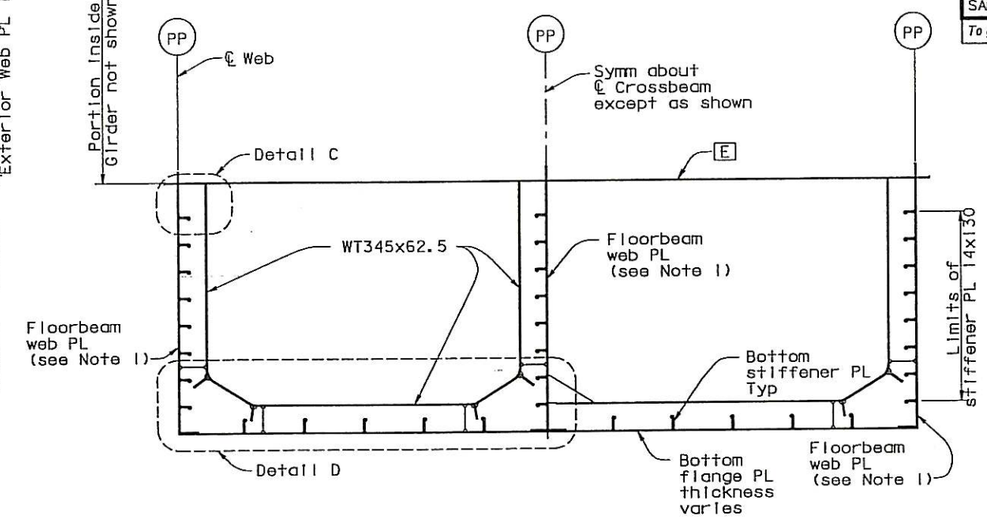

PARTIAL HEIGHT DIAPHRAGM
SECTION A'-A'
1:40

Daniel J. Turner
REGISTERED PROFESSIONAL ENGINEER Daniel J. Turner No. C 65033 Exp. 06/30/07 CIVIL STATE OF CALIFORNIA

FOR REVISIONS ONLY

MARK	DATE	DESCRIPTIONS	BY	CH'D	CCO#
2	04/02/07	CROSSBEAM KINK	GB	DT	38
1	06/23/06	STIFFENER SIZE INCREASE	GB	NV	21

REVISIONS

CONTRACT CHANGE ORDER NO. ____
SHEET ____ OF ____

NOTES:

1. For floorbeam webs, see "Typical Floorbeam Details No. 2" sheet.
2. For Details A and B, see "Typical Crossbeam Details No. 3" sheet.
3. For Details C and D, see "Typical Crossbeam Details No. 4" sheet.
4. At the Contractor's option WT345x62.5 and WT460x100.5 may be substituted with equivalent built-up sections with the approval of the Engineer.

100 % PS&E

ALL DIMENSIONS ARE IN MILLIMETERS UNLESS OTHERWISE SHOWN

SAN FRANCISCO OAKLAND BAY BRIDGE
EAST SPAN SEISMIC SAFETY PROJECT
SELF-ANCHORED SUSPENSION BRIDGE
(SUPERSTRUCTURE & TOWER)

TYPICAL CROSSBEAM DETAILS NO. 2

R. Vallzadeh/V. Toan/Y.L./W.L./F.C.
DESIGN OVERSIGHT
SIGN OFF DATE 04/02/07

	BY	CHECKED
DESIGN	G. Baker	P. Ritchie
DETAILS	D. Veytsman	T. McMeans
QUANTITIES	G. Baker	M. Roberts

PREPARED FOR THE STATE OF CALIFORNIA DEPARTMENT OF TRANSPORTATION

R. Manzanarez
PROJECT ENGINEER

BRIDGE NO. 34-0006L/R
KILOMETER POST 13.2/13.9

CU 04
EA 0120F1

DISREGARD PRINTS BEARING EARLIER REVISION DATES
REVISION DATES (PRELIMINARY STAGE ONLY) 05/26/99 05/29/01 05/28/02 07/01/02 12/19/02

SHEET 239R2 OF

Rev. Date: 5-18-98

ORIGINAL SCALE IN MILLIMETERS FOR REDUCED PLANS 0 10 20 30 40 50 60 70 80 90 100

DATE PLOTTED => 04 APR 2007 TIME PLOTTED => 08:22:05

DIST.	COUNTY	ROUTE	KILOMETER POST TOTAL PROJECT	SHEET NO.	TOTAL SHEETS
04	SF	80	13.2/13.9	658R1	1204

George Baker
REGISTERED ENGINEER - CIVIL
1-27-03
PLANS APPROVAL DATE

REGISTERED PROFESSIONAL ENGINEER George S. Baker No. C57112 Exp. 12/31/05 CIVIL STATE OF CALIFORNIA

The State of California or its officers or agents shall not be responsible for the accuracy or completeness of electronic copies of this plan sheet.

T.Y. LIN / MOFFATT & NICHOL
825 BATTERY STREET
SAN FRANCISCO, CA 94111

To get to the web site, go to http://www.dot.ca.gov

Caltrans Metric

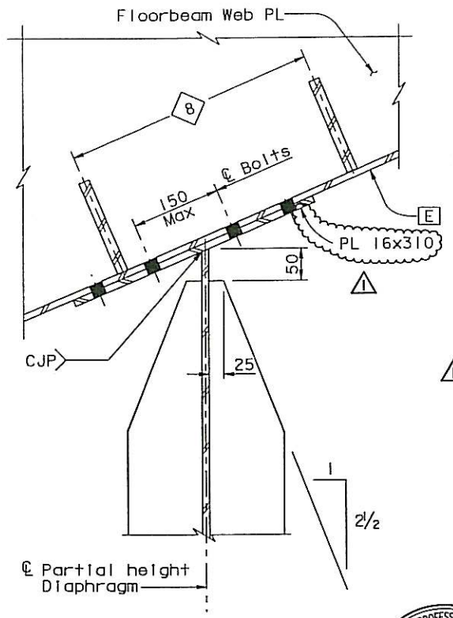

SECTION A-A
1:5

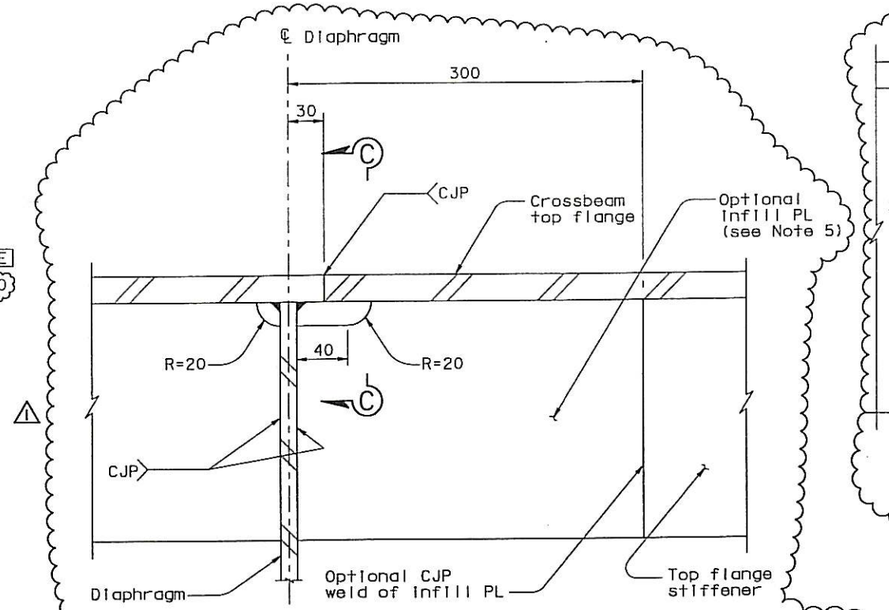

SHOP SPLICE AT CROSSBEAM DIAPHRAGM, PP14-28 (See Notes 2,3,4)

SECTION B-B
1:2.5

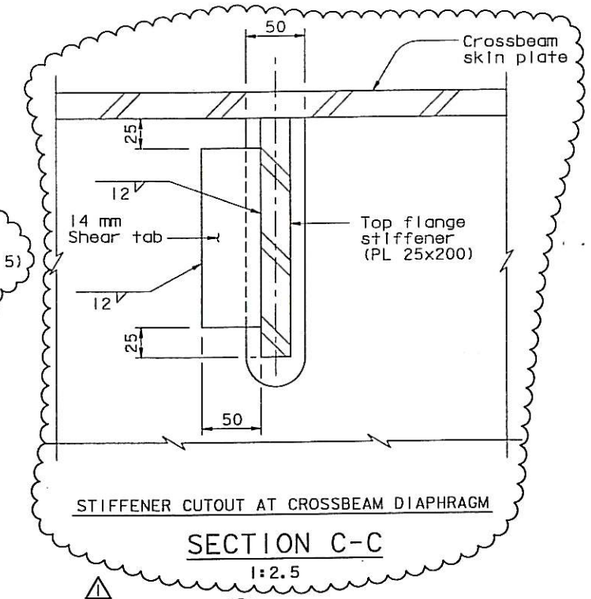

STIFFENER CUTOUT AT CROSSBEAM DIAPHRAGM

SECTION C-C
1:2.5

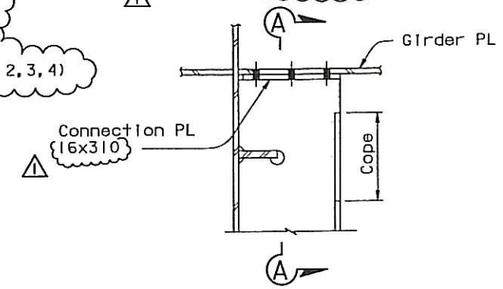

DETAIL C
1:10

REGISTERED PROFESSIONAL ENGINEER Marwan N. Nader No. C 054426 Exp. 12/31/07 CIVIL STATE OF CALIFORNIA

FOR REVISIONS ONLY

MARK	DATE	DESCRIPTIONS	BY	CH'D	CCO#
1	04/02/07	CROSSBEAM KINK	GB	MN	38

REVISIONS

CONTRACT CHANGE ORDER NO. ____
SHEET ____ OF ____

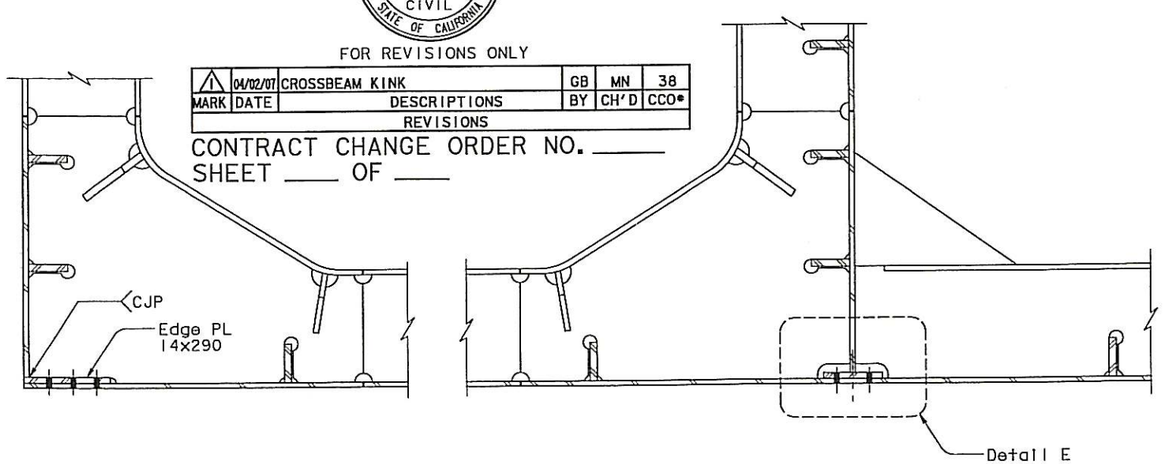

DETAIL D (see Note 1)
1:10

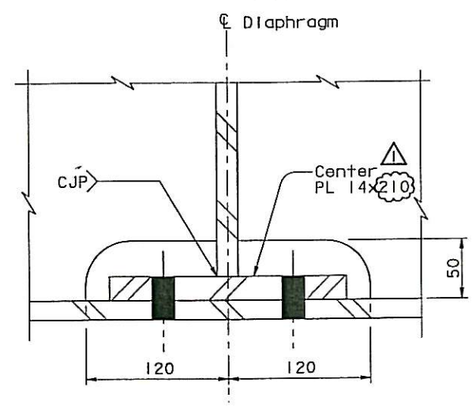

DETAIL E
1:2.5

NOTES:

1. For details not shown, see "Typical Crossbeam Details No. 3" sheet.
2. The location of the angular changes to the crossbeam skin plates due to the roadway geometry shall be at the first diaphragm inside the crossbeam field splice, towards the centerline of the bridge.
3. Stiffeners at the angle change, running longtiudinal to the crossbeam, shall be interrupted and welded to the diaphragm with a CJP weld. Stiffeners on opposite faces of the diaphragm shall be aligned within the tolerances specified for stiffener splices.
4. Crossbeam skin plates shall be twisted to accommodate roadway geometry shown on the plans.
5. The Contractor may provide an infill segment in the stiffeners to allow for fit-up. This length shall be welded to skin plate after fit-up.

4 REVISED PER ADDENDUM NO. 4 DATED DECEMBER 9, 2005

ALL DIMENSIONS ARE IN MILLIMETERS UNLESS OTHERWISE SHOWN

100% PS&E

SAN FRANCISCO OAKLAND BAY BRIDGE
EAST SPAN SEISMIC SAFETY PROJECT
SELF-ANCHORED SUSPENSION BRIDGE
(SUPERSTRUCTURE & TOWER)

TYPICAL CROSSBEAM DETAILS NO. 4

R. Vaziadeh/V. Toan/Y.L./W.L./F.C.
DESIGN OVERSIGHT
Roya Vaziadeh / Vong Toan / Y. Liu
SIGN OFF DATE 04/02/07

	BY	CHECKED
DESIGN	G. Baker	P. Ritchie
DETAILS	S. Camo	T. McMeans
QUANTITIES	G. Baker	M. Roberts

PREPARED FOR THE STATE OF CALIFORNIA DEPARTMENT OF TRANSPORTATION

R. Manzanarez
PROJECT ENGINEER

BRIDGE NO. 34-0006L/R
KILOMETER POST 13.2/13.9

CU 04
EA 0120F1

DISREGARD PRINTS BEARING EARLIER REVISION DATES

REVISION DATES (PRELIMINARY STAGE ONLY): 09/08/05 05/24/06 07/07/06 12/18/06 11/13/06

SHEET 241R1 OF

Rev. Date: 5-18-98

ORIGINAL SCALE IN MILLIMETERS FOR REDUCED PLANS 0 10 20 30 40 50 60 70 80 90 100

FILE => I:\bb\04-01200I\sas\contract plans and cco\cco\in progress\cco#38\ggcrs04.dgn

USERNAME => gwinrow DATE PLOTTED => 03 APR 2007 TIME PLOTTED => 11:24:22

NOTES:
1. For Details C, D and E, and Section D-D, see "Typical Crossbeam Details No. 6" sheet.
2. For stiffener termination detail, see "Typical Crossbeam Details No. 6" sheet.
3. For Detail J, see "Typical Crossbeam Details No. 10" sheet.
4. In order to accommodate the "W" line and "E" line roadway profiles crossbeams at PP 14 to 28 bend at diaphragms. For roadway profiles see "Road Plans". For details see "Typical Crossbeam Details No. 4" sheet.

LEGEND:
"Indicates SPCM web plate"
"Indicates SPCM & TTP web plate"

DIST.	COUNTY	ROUTE	KILOMETER POST TOTAL PROJECT	SHEET NO.	TOTAL SHEETS
04	SF	80	13.2/13.9	659R2	1204

George Baker
REGISTERED ENGINEER - CIVIL
1-27-03
PLANS APPROVAL DATE
The State of California or its officers or agents shall not be responsible for the accuracy or completeness of electronic copies of this plan sheet.

REGISTERED PROFESSIONAL ENGINEER George S. Baker No. C 57112 Exp. 12/31/05 CIVIL STATE OF CALIFORNIA

Daniel J. Turner
REGISTERED PROFESSIONAL ENGINEER Daniel J. Turner No. C 65033 Exp. 06/30/07 CIVIL STATE OF CALIFORNIA
FOR REVISIONS ONLY

T.Y. LIN / MOFFATT & NICHOL
825 BATTERY STREET
SAN FRANCISCO, CA 94111

Caltrans now has a web site! To get to the web site, go to http://www.dot.ca.gov

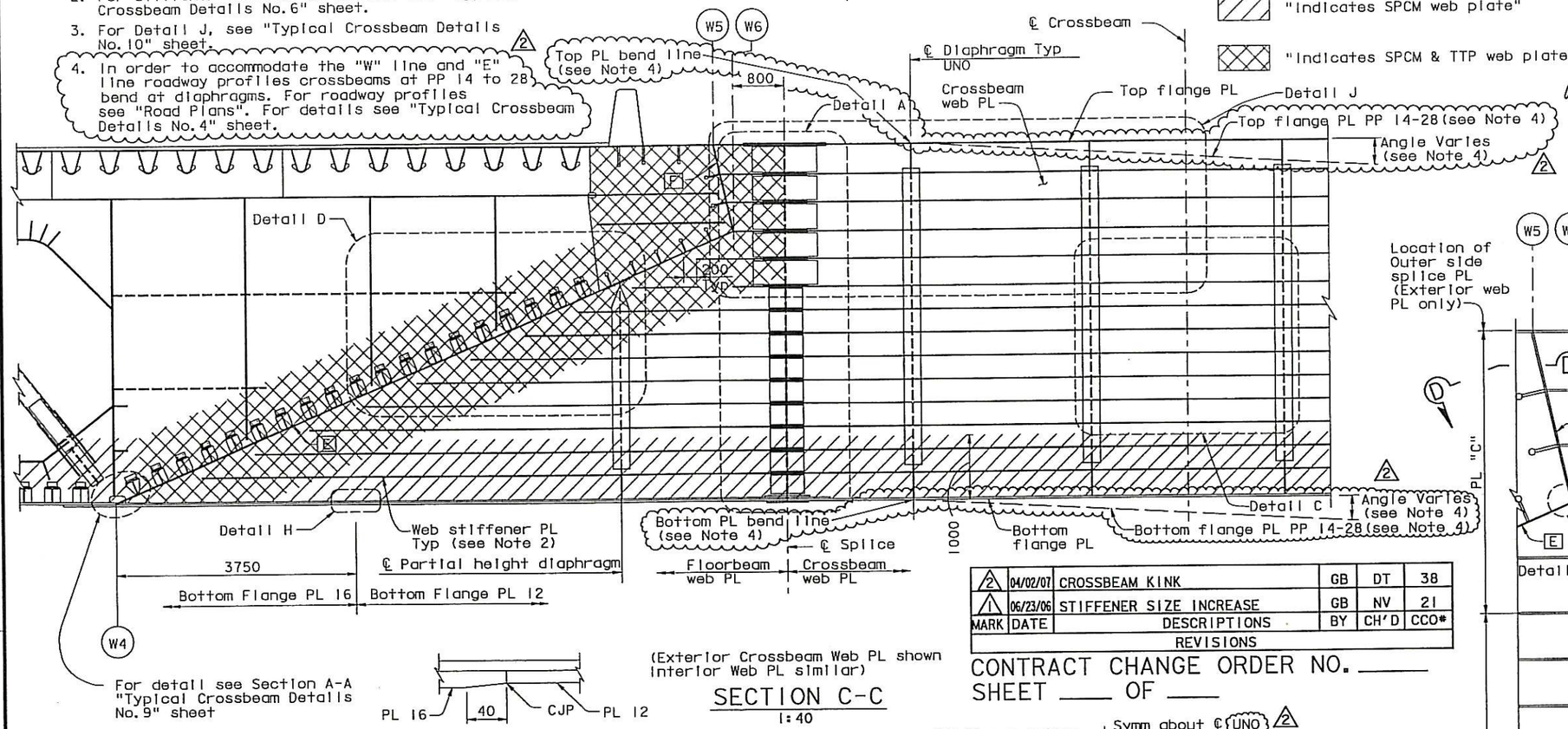

DETAIL H
1:2.5

(Exterior Crossbeam Web PL shown interior Web PL similar)
SECTION C-C
1:40

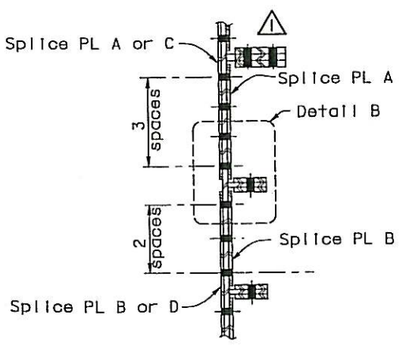

SECTION A-A
1:10

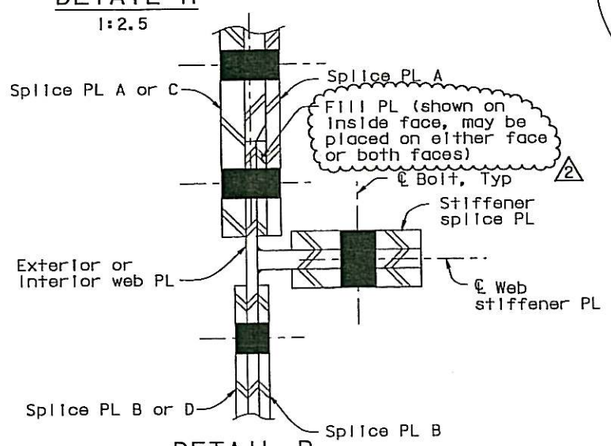

DETAIL B
1:2.5

MARK	DATE	DESCRIPTIONS	BY	CH'D	CCO#
2	04/02/07	CROSSBEAM KINK	GB	DT	38
1	06/23/06	STIFFENER SIZE INCREASE	GB	NV	21

REVISIONS

CONTRACT CHANGE ORDER NO. ____
SHEET ____ OF ____

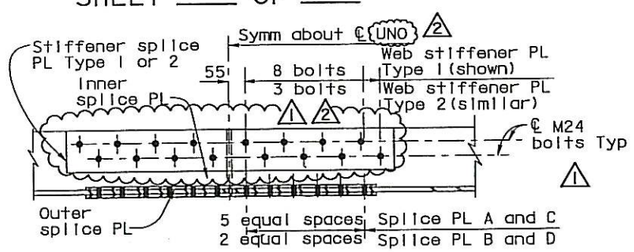

SECTION B-B
1:10

SPLICE PLATE TABLE	
Plate Type	Dimensions
Inner Side PL "A"	PL 14x378x1000
Inner Side PL "B"	PL 10x310x520
Outer Side PL "C"	PL 20x1000x2102
Outer Side PL "D"	PL 14x520x3206
Web Stiff PL Type 1	PL 20x150x970
Web Stiff PL Type 2	PL 14x110x560

ALL DIMENSIONS ARE IN MILLIMETERS UNLESS OTHERWISE SHOWN

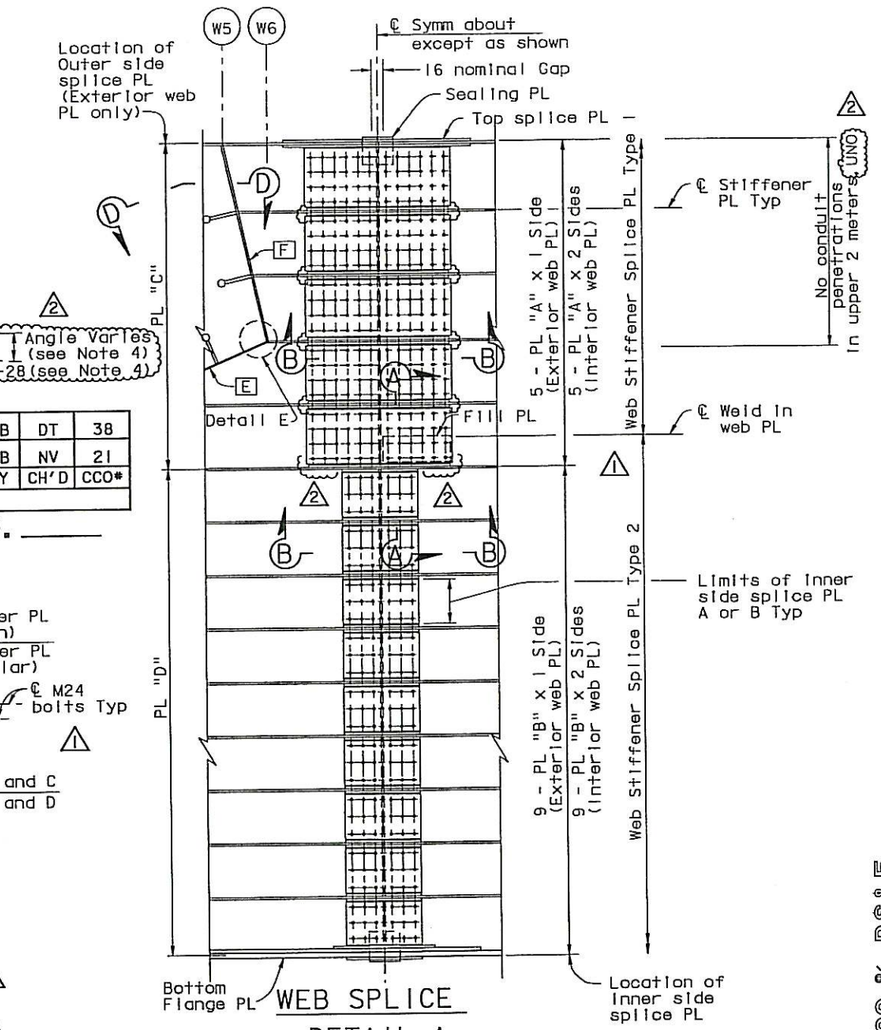

WEB SPLICE
DETAIL A
1:20

100 % PS&E

R. Vallzadeh/V. Toan/Y.L./W.L./F.C.
DESIGN OVERSIGHT
SIGN OFF DATE 04/02/07
Rev. Date 5-18-98

	BY	CHECKED
DESIGN	G. Baker	P. Ritchie
DETAILS	D. Veytsman	T. McMeans
QUANTITIES	G. Baker	M. Roberts

PREPARED FOR THE STATE OF CALIFORNIA DEPARTMENT OF TRANSPORTATION

R. Manzanarez
PROJECT ENGINEER

BRIDGE NO. 34-0006L/R
KILOMETER POST 13.2/13.9

SAN FRANCISCO OAKLAND BAY BRIDGE
EAST SPAN SEISMIC SAFETY PROJECT
SELF-ANCHORED SUSPENSION BRIDGE
(SUPERSTRUCTURE & TOWER)

TYPICAL CROSSBEAM DETAILS NO. 5

CU 04
EA 0120F1

ORIGINAL SCALE IN MILLIMETERS FOR REDUCED PLANS 0 10 20 30 40 50 60 70 80 90 100

DISREGARD PRINTS BEARING EARLIER REVISION DATES 06/20/99 05/31/01 03/20/02 07/30/02 12/15/02

SHEET 242R2 OF

TIME PLOTTED => 08:22:59
DATE PLOTTED => 04 APR 2007
ISCEDRAWC => 2.0mm

MARK	DATE	DESCRIPTIONS	BY	CH'D	CCO#
1	04/02/07	CROSSBEAM KINK	GB	DT	38

REVISIONS

CONTRACT CHANGE ORDER NO. ____
SHEET ____ OF ____

REGISTERED PROFESSIONAL ENGINEER Daniel J. Turner No. C 65033 Exp. 06/30/07 CIVIL STATE OF CALIFORNIA

FOR REVISIONS ONLY

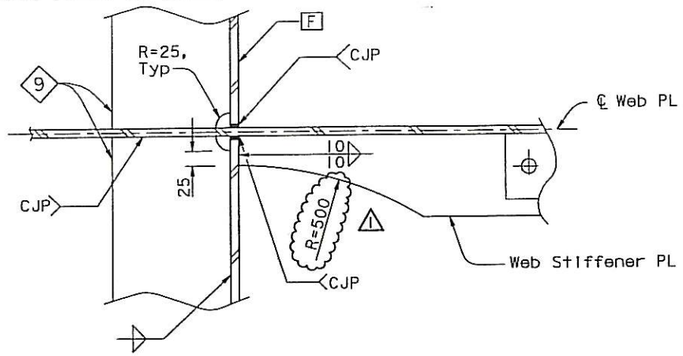

4 SECTION D-D
1:5

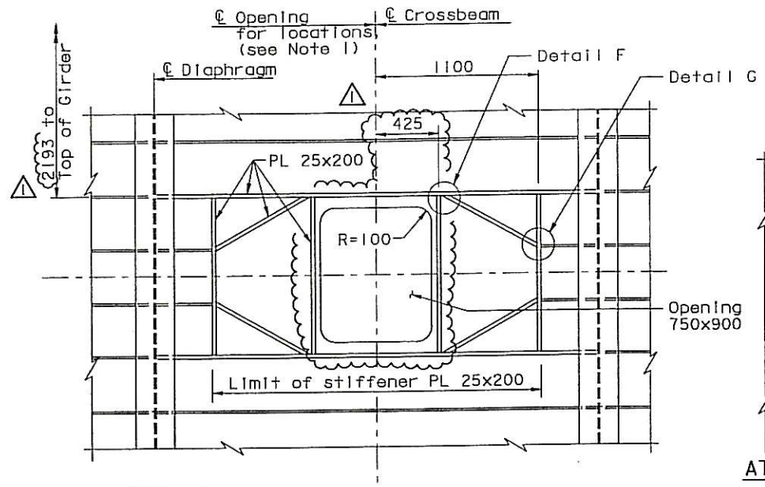

4 EXTERIOR WEB PLATES

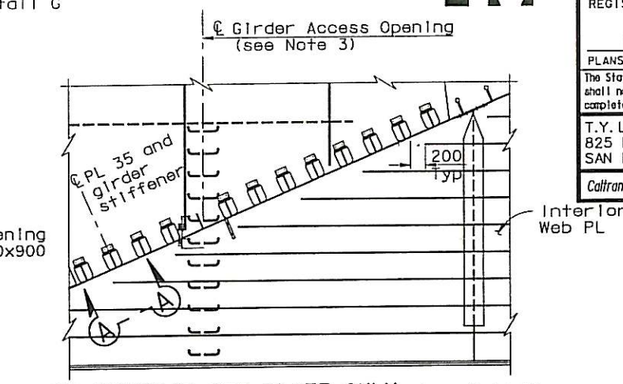

AT INTERIOR WEB PLATE ONLY (see Note 3)

DETAIL D
1:20

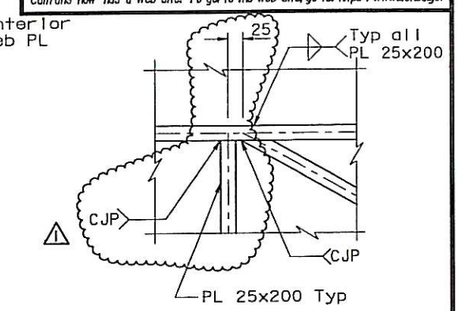

4 DETAIL F
1:5

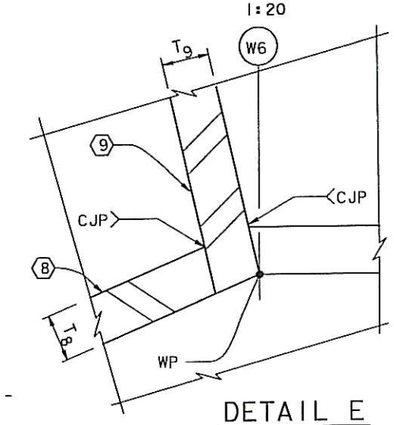

DETAIL E
1:1

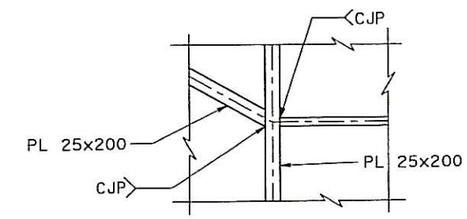

4 DETAIL G
1:5

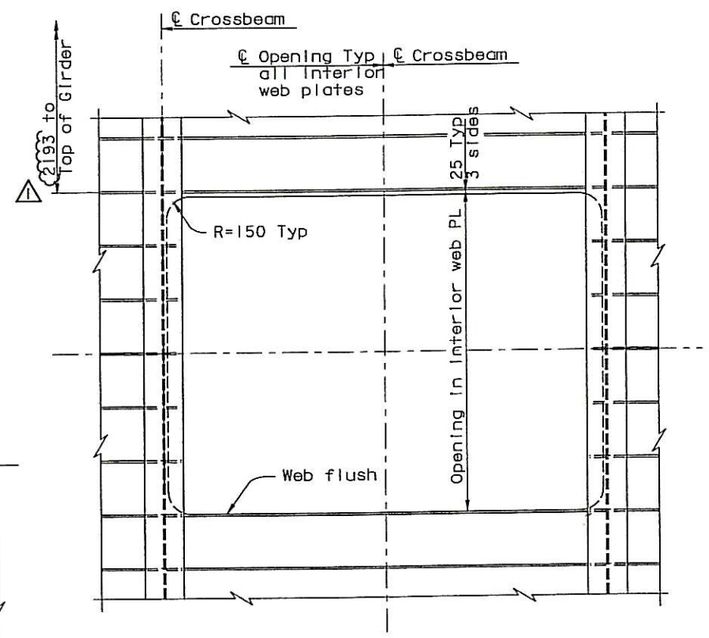

INTERIOR WEB PLATES

ACCESS OPENING IN CROSSBEAM WEB PLATES

DETAIL C
1:20

(14) (see Note 5)

TYPICAL UNO (see Note 2)

STIFFENER TERMINATION DETAIL
1:10

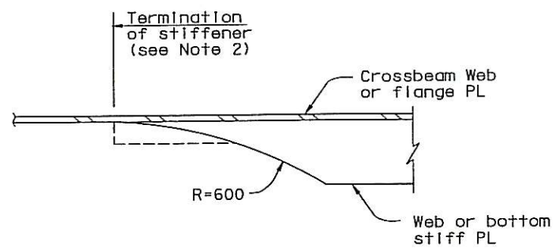

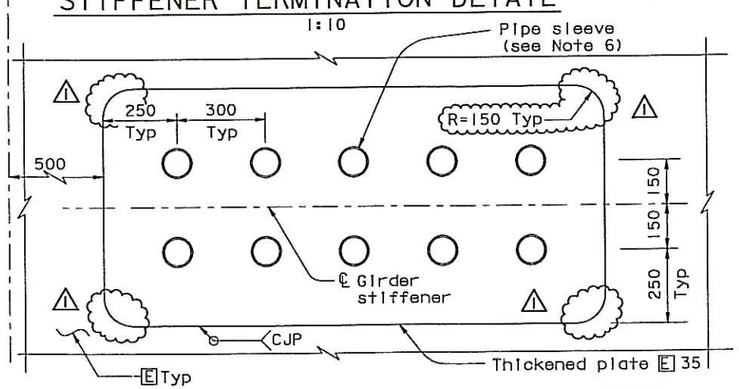

SECTION A-A (see Note 5)
1:10

NOTES:

1. For location of crossbeam access openings in exterior crossbeam web plates, see "Girder Access Details No. 1" sheet.
2. For Stiffener termination details not shown, see "Typical Girder Details No. 16" sheet.
3. For girder details at girder access opening, see "Typical Girder Details No. 15" sheet.
4. For details not shown, see "Access Opening With Door At Vertical Face Of Tower Strut Facade" and "Access Opening Door Detail" on "Tower Access Details No. 4" sheet.
5. At utility platform locations, panel points 14, 32, 50, 80, and 110, plate E shall be thickened as shown.
6. For pipe sleeve details, see "Utility Details No. 1" sheet.

4 **REVISED PER ADDENDUM NO. 4 DATED DECEMBER 9, 2005**

ALL DIMENSIONS ARE IN MILLIMETERS UNLESS OTHERWISE SHOWN

Caltrans Metric

DIST.	COUNTY	ROUTE	KILOMETER POST TOTAL PROJECT	SHEET NO.	TOTAL SHEETS
04	SF	80	13.2/13.9	660R1	1204

George Baker
REGISTERED ENGINEER - CIVIL
1-27-03
PLANS APPROVAL DATE

REGISTERED PROFESSIONAL ENGINEER George S. Baker No. C57112 Exp. 12/31/05 CIVIL STATE OF CALIFORNIA

The State of California or its officers or agents shall not be responsible for the accuracy or completeness of electronic copies of this plan sheet.

T.Y. LIN / MOFFATT & NICHOL
825 BATTERY STREET
SAN FRANCISCO, CA 94111

Caltrans now has a web site! To get to the web site, go to: http://www.dot.ca.gov

SAN FRANCISCO OAKLAND BAY BRIDGE
EAST SPAN SEISMIC SAFETY PROJECT
SELF-ANCHORED SUSPENSION BRIDGE
(SUPERSTRUCTURE & TOWER)

TYPICAL CROSSBEAM DETAILS NO. 6

R. Valizadeh/V. Toan/Y.L./W.L./F.C.
DESIGN OVERSIGHT
Roya Valizadeh / Vang Toan / Y. Liu
SIGN OFF DATE 04/02/07

	BY	CHECKED
DESIGN	G. Baker	P. Ritchie
DETAILS	D. Veytsman	T. McMeans
QUANTITIES	G. Baker	M. Roberts

PREPARED FOR THE STATE OF CALIFORNIA DEPARTMENT OF TRANSPORTATION

R. Manzanarez
PROJECT ENGINEER

BRIDGE NO. 34-0006L/R
KILOMETER POST 13.2/13.9

CU 04
EA 0120F1

DISREGARD PRINTS BEARING EARLIER REVISION DATES

REVISION DATES (PRELIMINARY STAGE ONLY) 05/26/99 05/26/01 01/28/02 12/18/02 11/13/03

SHEET 243R1 OF

Rev. Date: 5-18-98

ORIGINAL SCALE IN MILLIMETERS FOR REDUCED PLANS 0 10 20 30 40 50 60 70 80 90 100

DATE PLOTTED => 03 APR 2007 TIME PLOTTED => 16:14:23

100% PS&E

USERNAME => klo

DIST.	COUNTY	ROUTE	KILOMETER POST TOTAL PROJECT	SHEET NO.	TOTAL SHEETS
04	SF	80	13.2/13.9	725R1	1204

George Baker
REGISTERED ENGINEER - CIVIL
12-6-04
PLANS APPROVAL DATE

REGISTERED PROFESSIONAL ENGINEER George S. Baker No. C57112 Exp. 12/31/05 CIVIL STATE OF CALIFORNIA

The State of California or its officers or agents shall not be responsible for the accuracy or completeness of electronic copies of this plan sheet.

T.Y. LIN / MOFFATT & NICHOL
825 BATTERY STREET
SAN FRANCISCO, CA 94111

Caltrans now has a web site! To get to the web site, go to: http://www.dot.ca.gov

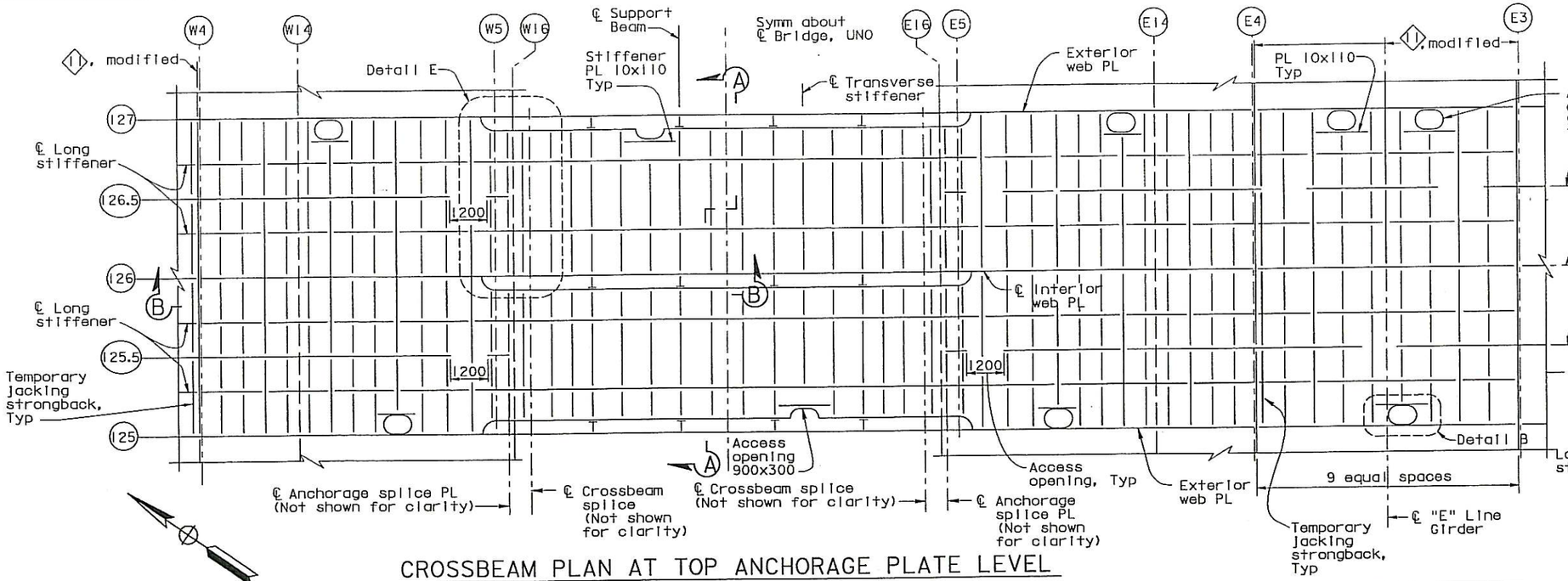

CROSSBEAM PLAN AT TOP ANCHORAGE PLATE LEVEL
1:80

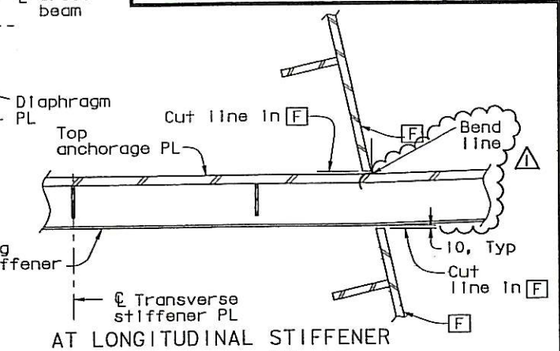

AT LONGITUDINAL STIFFENER

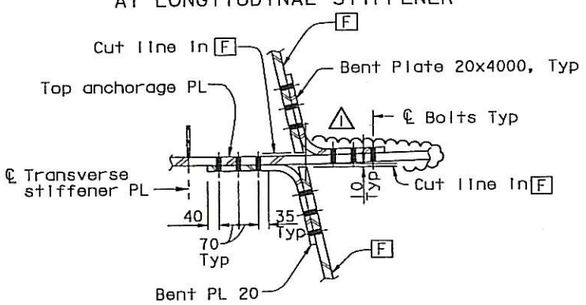

BETWEEN LONGITUDINAL STIFFENERS

DETAIL A
1:10

MARK	DATE	DESCRIPTIONS	BY	CH'D	CCO#
1	04/02/07	CROSSBEAM KINK	GB	DT	38

REVISIONS

CONTRACT CHANGE ORDER NO. ____
SHEET ____ OF ____

REGISTERED PROFESSIONAL ENGINEER Daniel J. Turner No. C 65033 Exp. 06/30/07 CIVIL STATE OF CALIFORNIA

FOR REVISIONS ONLY

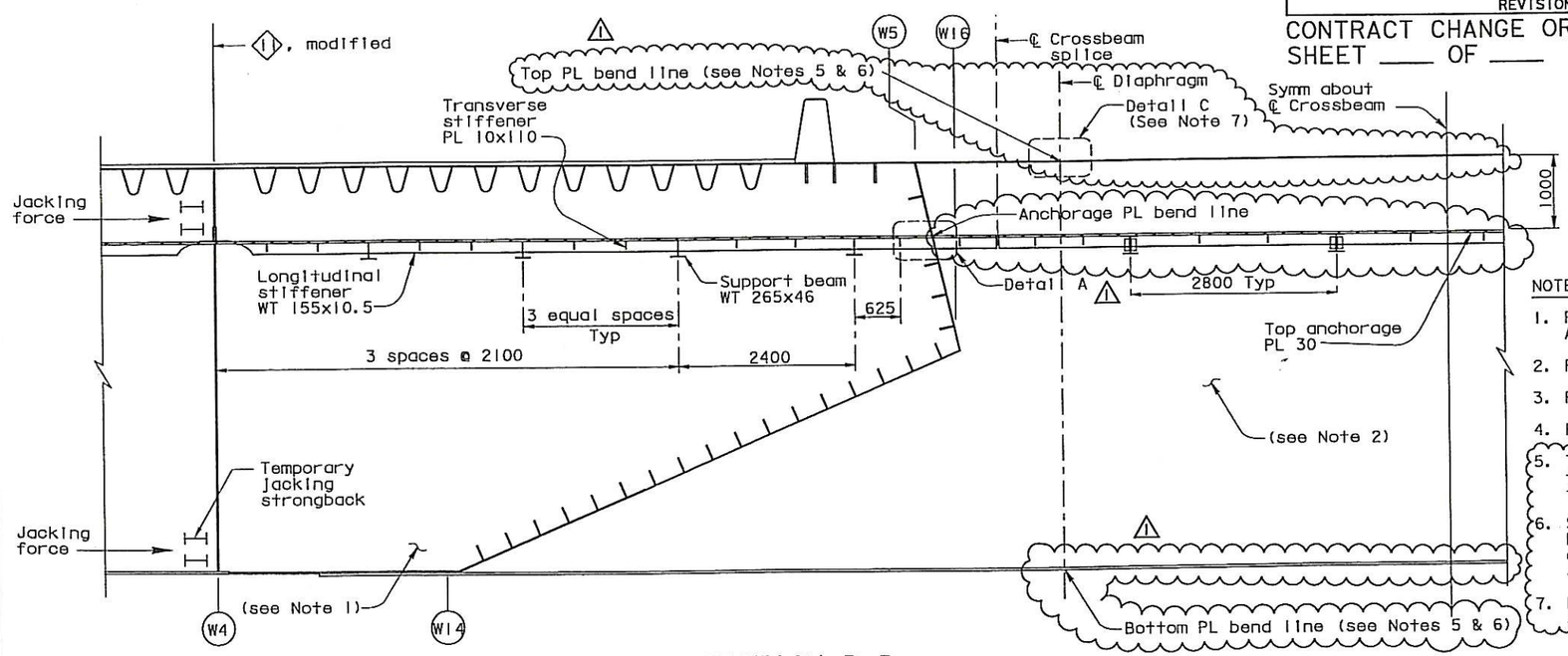

SECTION B-B
1:40

NOTES:

1. For girder details not shown, see "Girder At East Transition" and "Floorbeam At East Transition" sheets.
2. For crossbeam details not shown, see "Crossbeam At Pier E2" sheets.
3. For Section A-A and Detail E, see "Crossbeam At East Anchorage No.3" sheet.
4. For Detail B, see "Crossbeam At East Anchorage No.4" sheet.
5. The location of the angular changes to the top and bottom skin plates due to the roadway geometry shall be at the first diaphragm inside the crossbeam field splice, towards the centerline of the bridge.
6. Stiffeners at the angle change, running longitudinal to the crossbeam, shall be interrupted and welded to the diaphragm with a CJP weld. Stiffeners on opposite faces of the diaphragm shall be aligned within the tolerances specified for stiffener splices.
7. For Detail C, see similar Section B-B on "Typical Crossbeam Details No. 4" sheet.

ALL DIMENSIONS ARE IN MILLIMETERS UNLESS OTHERWISE SHOWN

R. Vallzadeh/V. Toan/Y.L./W.L./F.C.
DESIGN OVERSIGHT
Roya Vallzadeh / Vong Toan / Y. Liu
SIGN OFF DATE 04/02/07

	BY	CHECKED
DESIGN	G. Baker	P. Ritchie
DETAILS	D. Veytsman	T. McMeans
QUANTITIES	C. Mauch	M. Roberts

PREPARED FOR THE STATE OF CALIFORNIA DEPARTMENT OF TRANSPORTATION

R. Manzanarez
PROJECT ENGINEER

BRIDGE NO. 34-0006L/R
KILOMETER POST 13.2/13.9

SAN FRANCISCO OAKLAND BAY BRIDGE
EAST SPAN SEISMIC SAFETY PROJECT
SELF-ANCHORED SUSPENSION BRIDGE
(SUPERSTRUCTURE & TOWER)

CROSSBEAM AT EAST ANCHORAGE NO. 2

SHEET 308R1 OF

Rev. Date: 5-18-98

ORIGINAL SCALE IN MILLIMETERS FOR REDUCED PLANS 0 10 20 30 40 50 60 70 80 90 100

CU 04
EA 0120F1

DISREGARD PRINTS BEARING EARLIER REVISION DATES

REVISION DATES (PRELIMINARY STAGE ONLY) 05/05/99 06/30/99 05/01/01 05/30/02 07/01/02 12/13/02

100 % PS&E

DATE PLOTTED => 04 APR 2007 TIME PLOTTED => 08:21:06

USERNAME => rctrm

FILE => h:\bb\04-0120f1\ccs\contract plans and ccs\ccs\in progress\ccs#38\angcrsll.dgn

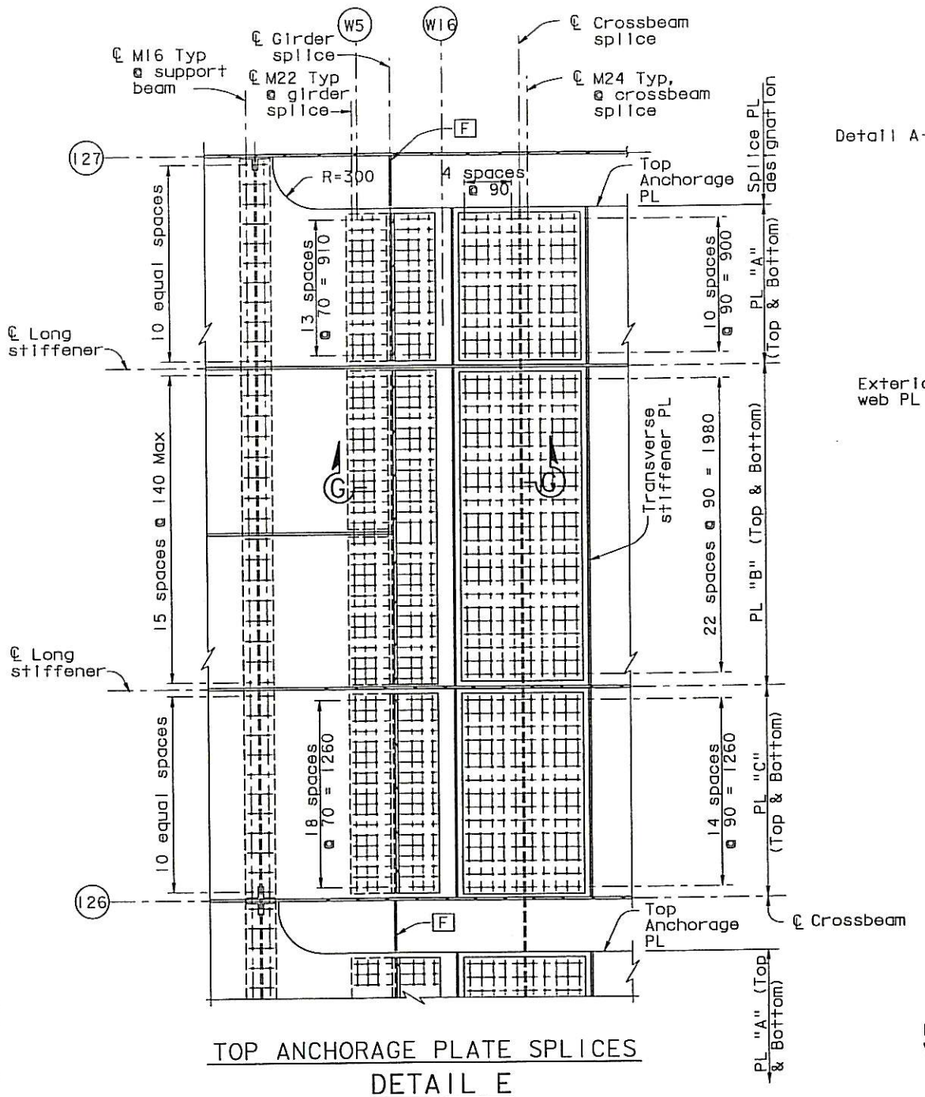

TOP ANCHORAGE PLATE SPLICES

DETAIL E

1:20

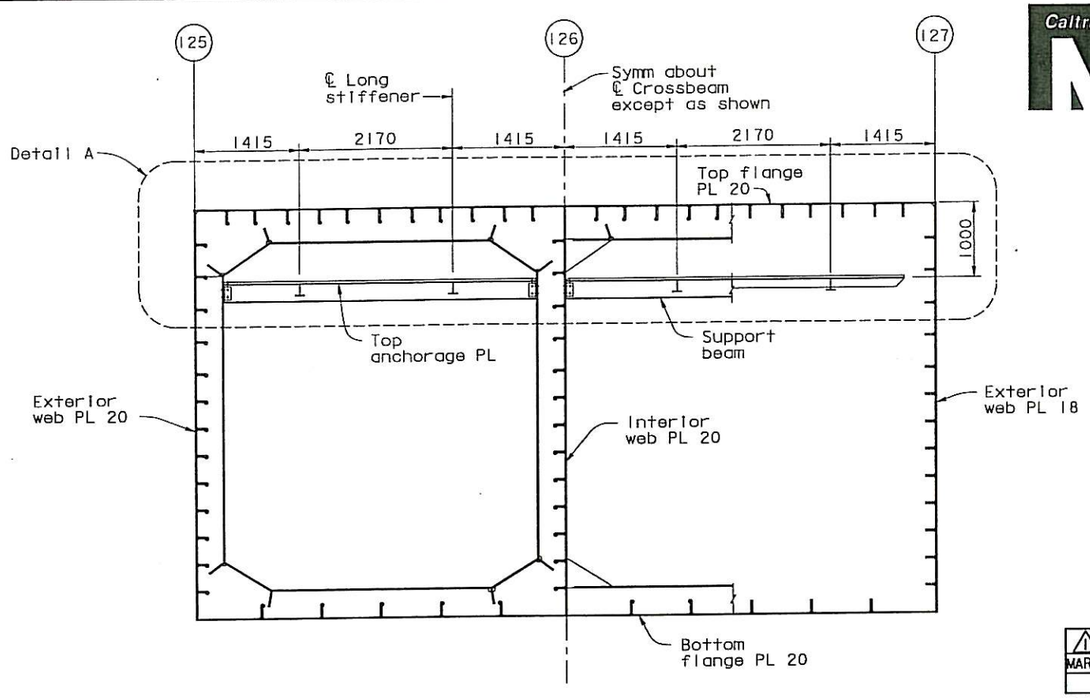

TYPICAL DIAPHRAGM

SECTION A-A

1:40

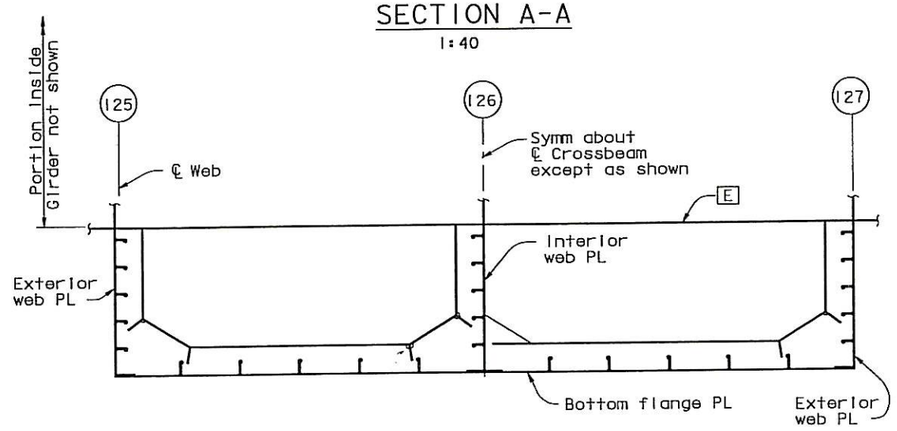

PARTIAL HEIGHT DIAPHRAGM

SECTION C-C

1:40

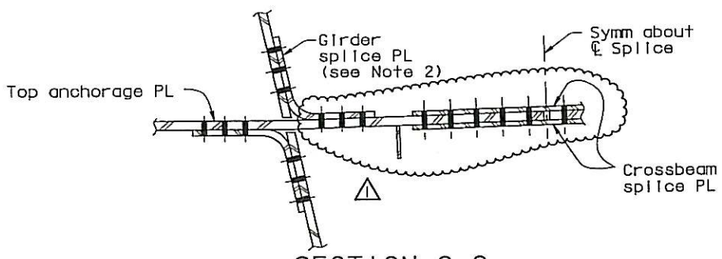

SECTION G-G

1:10

CROSSBEAM SPLICE PLATE TABLE	
Plate Type	Dimensions
PL "A"	PL 20x920x990
PL "B"	PL 20x920x2070
PL "C"	PL 20x920x1350

NOTES:

1. For details not shown, see "Typical Crossbeam Details" sheets.
2. For girder splice plate details, see Detail A on "Crossbeam At East Anchorage No. 2" sheet.
3. For Detail A, see "Crossbeam At East Anchorage No. 4" sheet.

DIST.	COUNTY	ROUTE	KILOMETER POST TOTAL PROJECT	SHEET NO.	TOTAL SHEETS
04	SF	80	13.2/13.9	726R1	1204

George Baker
REGISTERED ENGINEER - CIVIL

12-6-04
PLANS APPROVAL DATE

The State of California or its officers or agents shall not be responsible for the accuracy or completeness of electronic copies of this plan sheet.

REGISTERED PROFESSIONAL ENGINEER George S. Baker No. C57112 Exp. 12/31/05 CIVIL STATE OF CALIFORNIA

T.Y. LIN / MOFFATT & NICHOL
825 BATTERY STREET
SAN FRANCISCO, CA 94111

Caltrans now has a web site! To get to the web site, go to: http://www.dot.ca.gov

Caltrans Metric

REGISTERED PROFESSIONAL ENGINEER Daniel J. Turner No. C 65033 Exp. 06/30/07 CIVIL STATE OF CALIFORNIA

FOR REVISIONS ONLY

MARK	DATE	DESCRIPTIONS	BY	CH'D	CCO#
1	04/02/07	CROSSBEAM KINK	GB	DT	38

REVISIONS

CONTRACT CHANGE ORDER NO. ____
SHEET ____ OF ____

ALL DIMENSIONS ARE IN MILLIMETERS UNLESS OTHERWISE SHOWN

SAN FRANCISCO OAKLAND BAY BRIDGE
EAST SPAN SEISMIC SAFETY PROJECT
SELF-ANCHORED SUSPENSION BRIDGE
(SUPERSTRUCTURE & TOWER)

CROSSBEAM AT EAST ANCHORAGE NO. 3

R. Valizadeh/V. Toan/Y.L./W.L./F.C.
DESIGN OVERSIGHT
SIGN OFF DATE 04/02/07

	BY	CHECKED
DESIGN	G. Baker	P. Ritchie
DETAILS	D. Veytsman	T. McMeans
QUANTITIES	C. Mauch	M. Roberts

PREPARED FOR THE STATE OF CALIFORNIA DEPARTMENT OF TRANSPORTATION

R. Manzanarez
PROJECT ENGINEER

BRIDGE NO. 34-0006L/R
KILOMETER POST 13.2/13.9

CU 04
EA 0120F1

DISREGARD PRINTS BEARING EARLIER REVISION DATES

REVISION DATES (PRELIMINARY STAGE ONLY) 08/02/99 05/31/01 04/02/02 07/01/02 12/19/02

SHEET 309R1 OF

Rev. Date: 5-18-98

ORIGINAL SCALE IN MILLIMETERS FOR REDUCED PLANS 0 10 20 30 40 50 60 70 80 90 100

FILE => I:\bb\04-01200I\sas\contract plans and cco\cco\in progress\cco=38\agcrs12.dgn

100 % PS&E

USERNAME => vignatovs DATE PLOTTED => 27 MAR 2007 TIME PLOTTED => 11:12:31

DIST.	COUNTY	ROUTE	KILOMETER POST TOTAL PROJECT	SHEET NO.	TOTAL SHEETS
04	SF	80	13.2/13.9	956R1	1204

Caltrans Metric

REGISTERED ENGINEER - CIVIL

12-6-04

PLANS APPROVAL DATE

REGISTERED PROFESSIONAL ENGINEER Marwan N. Nader No. C 054426 Exp. 12/31/07 CIVIL STATE OF CALIFORNIA

The State of California or its officers or agents shall not be responsible for the accuracy or completeness of electronic copies of this plan sheet.

T.Y. LIN / MOFFATT & NICHOL
825 BATTERY STREET
SAN FRANCISCO, CA 94111

To get to the web site, go to: http://www.dot.ca.gov

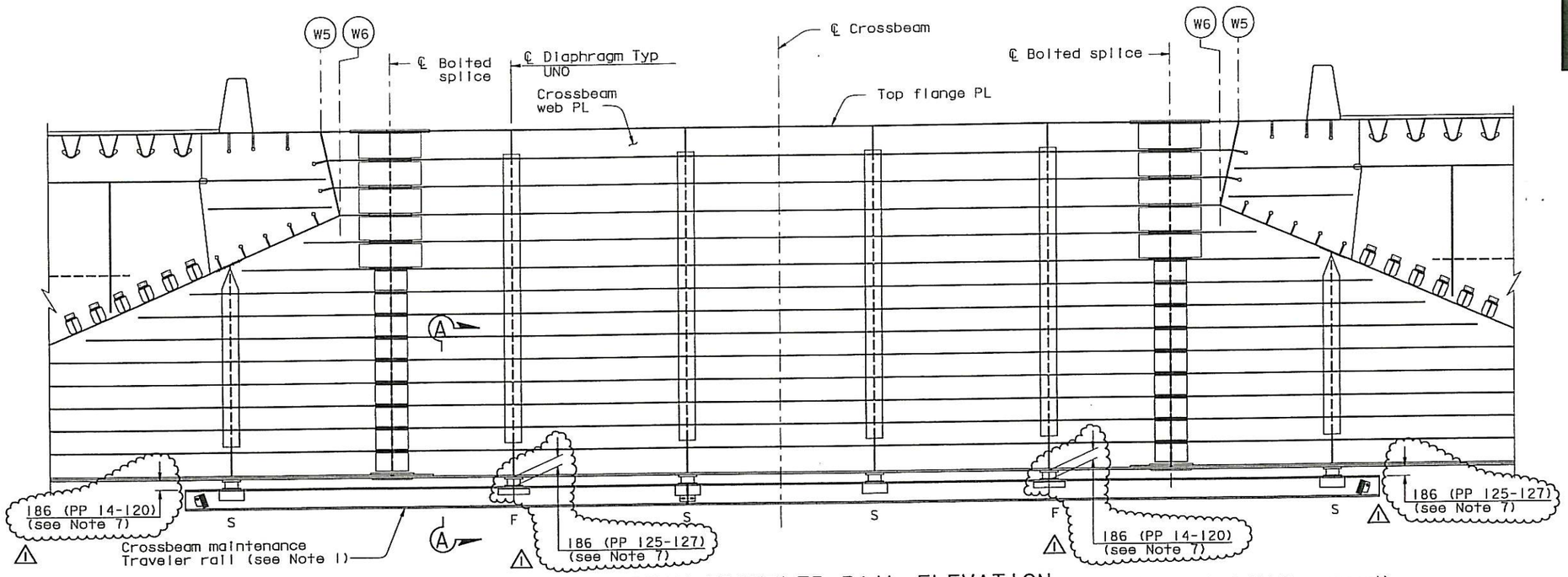

CROSSBEAM TRAVELER RAIL-ELEVATION (F=Fixed support; S=Sliding support)
1:40

MARK	DATE	DESCRIPTIONS	BY	CH'D	CCO#
1	04/02/07	CROSSBEAM KINK	MN	GB	38

REVISIONS

CONTRACT CHANGE ORDER NO. ____
SHEET ____ OF ____

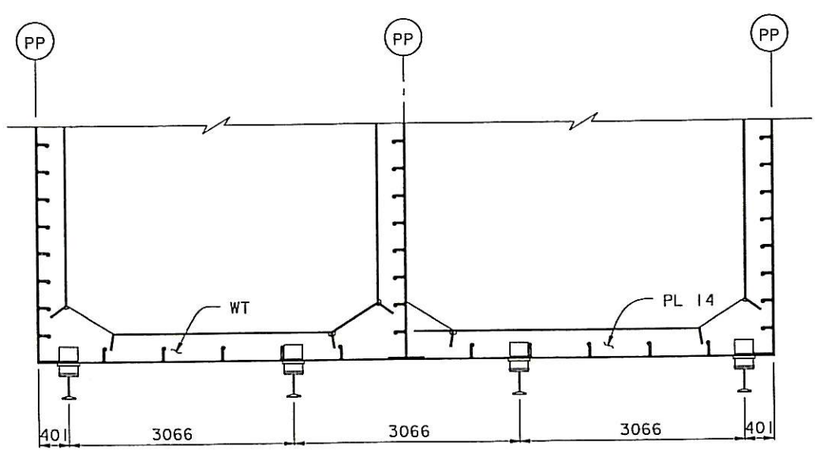

SECTION A-A
1:40

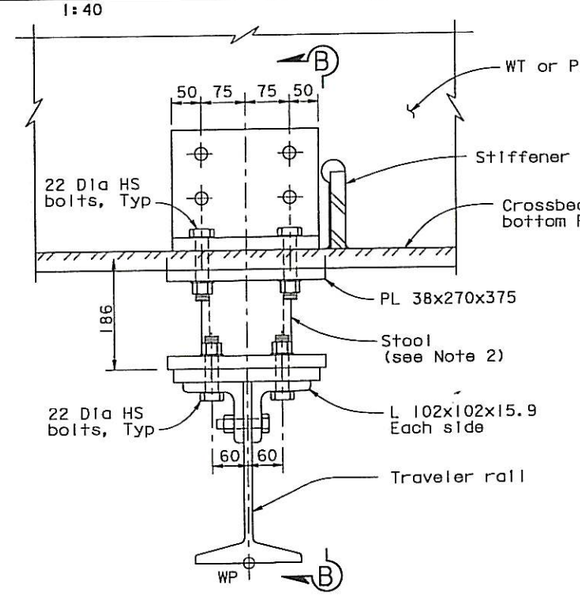

FIXED SUPPORT (See Note 2)
1:5

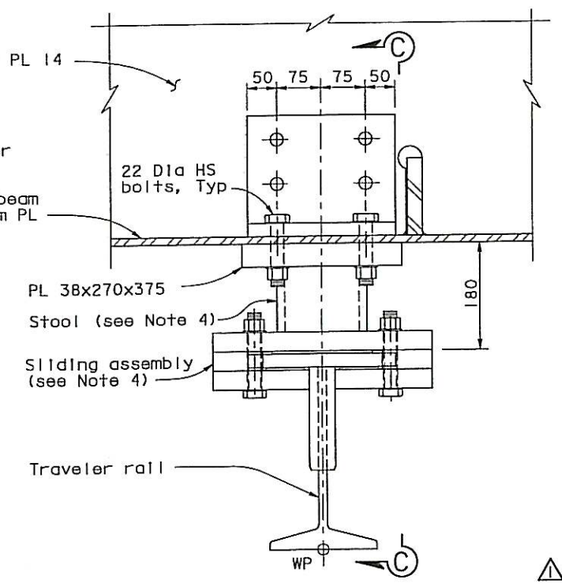

SLIDING SUPPORT (See Note 4)
1:5

NOTES:

1. For traveler rail details, see "Traveler Rail Details No. 1" and "Traveler Rail Details No. 2" sheets.
2. For additional details not shown at fixed support, see "Traveler Rail Details No. 5" sheet.
3. For Section B-B, see Section A-A on "Traveler Rail Details No. 5" sheet.
4. For additional details not shown at sliding support, see "Traveler Rail Details No. 7" sheet.
5. For Section C-C, see Section A-A on "Traveler Rail Details No. 7" sheet.
6. The bolt sizes shown correspond to US Standard bolt sizes.
7. The traveler rail shall be straight. For crossbeams PP 14-28 and PP 125-127 the rail clearance shall vary between the specified supports.

ALL DIMENSIONS ARE IN MILLIMETERS UNLESS OTHERWISE SHOWN

100 % PS&E

USERNAME => vignatovs DATE PLOTTED => 27 MAR 2007 TIME PLOTTED => 09:18:48

SAN FRANCISCO OAKLAND BAY BRIDGE
EAST SPAN SEISMIC SAFETY PROJECT
SELF-ANCHORED SUSPENSION BRIDGE
(SUPERSTRUCTURE & TOWER)

CROSSBEAM ACCESS DETAILS NO. 4

R. Valizadeh/V. Toan/Y.L./W.L./F.C.
DESIGN OVERSIGHT
Roger Valizadeh / Vong Toan / Y. Liu
SIGN OFF DATE 04/02/07
Rev. Date: 5-18-98

	BY	CHECKED
DESIGN	M. Nader	N. Vo
DETAILS	G. Baker	N. Vo
QUANTITIES	G. Baker	N. Vo

ORIGINAL SCALE IN MILLIMETERS FOR REDUCED PLANS 0 10 20 30 40 50 60 70 80 90 100

PREPARED FOR THE STATE OF CALIFORNIA DEPARTMENT OF TRANSPORTATION

R. Manzanarez
PROJECT ENGINEER

BRIDGE NO. 34-0006L/R
KILOMETER POST 13.2/13.9

CU 04
EA 0120F1

DISREGARD PRINTS BEARING EARLIER REVISION DATES

REVISION DATES (PRELIMINARY STAGE ONLY) 04/02/02 07/01/02 12/19/02

SHEET 539R1 OF

FILE => I:\bb\04-012001\sas\contract plans and cco\cco\in progress\cco#38\akcad04.dgn