DIST.	COUNTY	ROUTE	KILOMETER POST TOTAL PROJECT	SHEET NO.	TOTAL SHEETS
04	SF	80	13.2/13.9	956R1	1204

Caltrans Metric

REGISTERED ENGINEER - CIVIL

12-6-04

PLANS APPROVAL DATE

REGISTERED PROFESSIONAL ENGINEER Marwan N. Nader No. C 054426 Exp. 12/31/07 CIVIL STATE OF CALIFORNIA

The State of California or its officers or agents shall not be responsible for the accuracy or completeness of electronic copies of this plan sheet.

T.Y. LIN / MOFFATT & NICHOL
825 BATTERY STREET
SAN FRANCISCO, CA 94111

To get to the web site, go to: http://www.dot.ca.gov

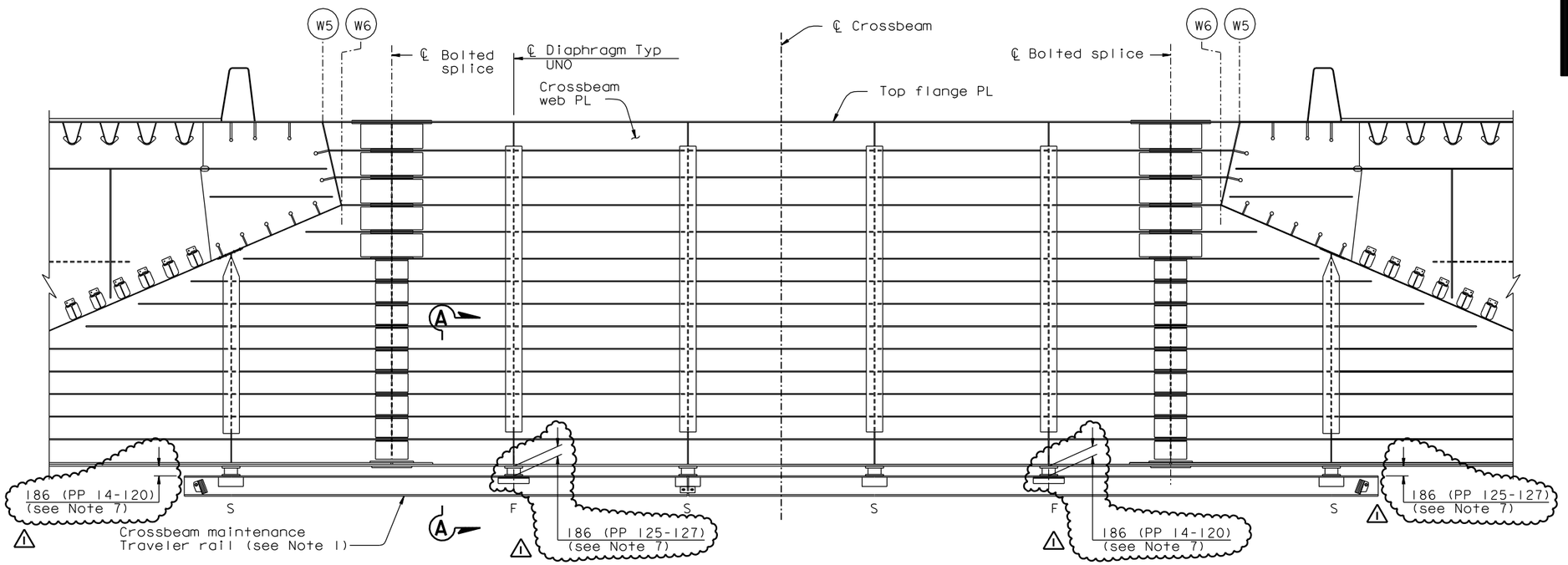

CROSSBEAM TRAVELER RAIL-ELEVATION (F=Fixed support; S=Sliding support)

1:40

MARK	DATE	DESCRIPTIONS	BY	CH'D	CCO#
1	04/02/07	CROSSBEAM KINK	MN	GB	38

REVISIONS

CONTRACT CHANGE ORDER NO. _____
SHEET ___ OF ___

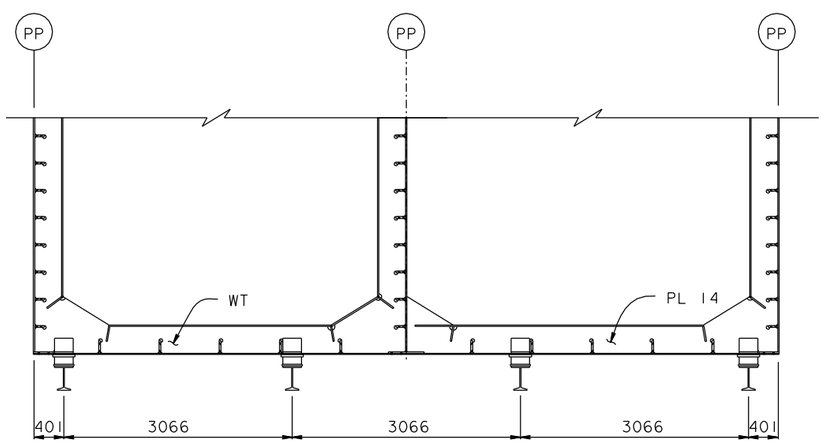

SECTION A-A

1:40

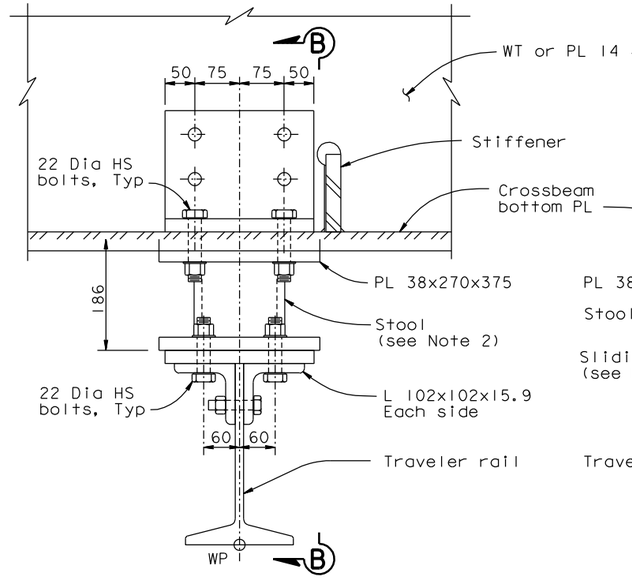

FIXED SUPPORT (See Note 2)

1:5

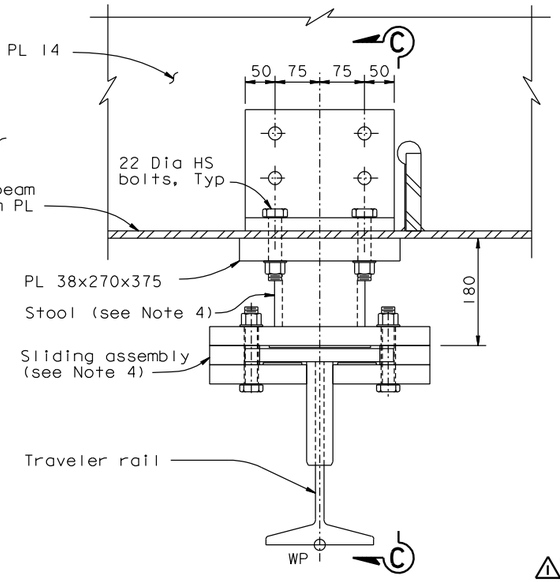

SLIDING SUPPORT (See Note 4)

1:5

NOTES:

1. For traveler rail details, see "Traveler Rail Details No.1" and "Traveler Rail Details No.2" sheets.
2. For additional details not shown at fixed support, see "Traveler Rail Details No.5" sheet.
3. For Section B-B, see Section A-A on "Traveler Rail Details No.5" sheet.
4. For additional details not shown at sliding support, see "Traveler Rail Details No.7" sheet.
5. For Section C-C, see Section A-A on "Traveler Rail Details No.7" sheet.
6. The bolt sizes shown correspond to US Standard bolt sizes.
7. The traveler rail shall be straight. For crossbeams PP 14-28 and PP 125-127 the rail clearance shall vary between the specified supports.

ALL DIMENSIONS ARE IN MILLIMETERS UNLESS OTHERWISE SHOWN

100% PS&E

TIME PLOTTED => 13:45:30
DATE PLOTTED => 12 APR 2007
USERNAME => vignatovsky

R. Valizadeh/V. Toan/Y.L./W.L./F.C.
DESIGN OVERSIGHT
Roya Valizadeh / Vong Toan / Y. Liu
SIGN OFF DATE 04/02/07

Rev. Date: 5-18-98

	BY	CHECKED
DESIGN	M. Nader	N. Vo
DETAILS	G. Baker	N. Vo
QUANTITIES	G. Baker	N. Vo

PREPARED FOR THE STATE OF CALIFORNIA DEPARTMENT OF TRANSPORTATION

R. Manzanarez
PROJECT ENGINEER

BRIDGE NO. 34-0006L/R
KILOMETER POST 13.2/13.9

CU 04
EA 0120F1

ORIGINAL SCALE IN MILLIMETERS FOR REDUCED PLANS 0 10 20 30 40 50 60 70 80 90 100

DISREGARD PRINTS BEARING EARLIER REVISION DATES

REVISION DATES (PRELIMINARY STAGE ONLY) 04/08/02 01/21/02 12/19/02

SHEET 539R1 OF

SAN FRANCISCO OAKLAND BAY BRIDGE
EAST SPAN SEISMIC SAFETY PROJECT
SELF-ANCHORED SUSPENSION BRIDGE
(SUPERSTRUCTURE & TOWER)

CROSSBEAM ACCESS DETAILS NO. 4

FILE => I:\bb\04-0120I\sas\contract plans and cco\cco\in progress\cco#38\akcad04.dgn