NOTES:
1. For Details C, D and E, and Section D-D, see "Typical Crossbeam Details No. 6" sheet.
2. For stiffener termination detail, see "Typical Crossbeam Details No. 6" sheet.
3. For Detail J, see "Typical Crossbeam Details No. 10" sheet.
4. In order to accommodate the "W" line and "E" line roadway profiles crossbeams at PP 14 to 28 bend at diaphragms. For roadway profiles see "Road Plans". For details see "Typical Crossbeam Details No. 4" sheet.

LEGEND:
"Indicates SPCM web plate"
"Indicates SPCM & TTP web plate"

| DIST. | COUNTY | ROUTE | KILOMETER POST TOTAL PROJECT | SHEET NO. | TOTAL SHEETS |
|---|---|---|---|---|---|
| 04 | SF | 80 | 13.2/13.9 | 659R2 | 1204 |

George Baker
REGISTERED ENGINEER - CIVIL
1-27-03
PLANS APPROVAL DATE
The State of California or its officers or agents shall not be responsible for the accuracy or completeness of electronic copies of this plan sheet.

REGISTERED PROFESSIONAL ENGINEER George S. Baker No. C 57112 Exp. 12/31/05 CIVIL STATE OF CALIFORNIA

Daniel J. Turner
REGISTERED PROFESSIONAL ENGINEER Daniel J. Turner No. C 65033 Exp. 06/30/07 CIVIL STATE OF CALIFORNIA
FOR REVISIONS ONLY

T.Y. LIN / MOFFATT & NICHOL
825 BATTERY STREET
SAN FRANCISCO, CA 94111

Caltrans now has a web site! To get to the web site, go to http://www.dot.ca.gov

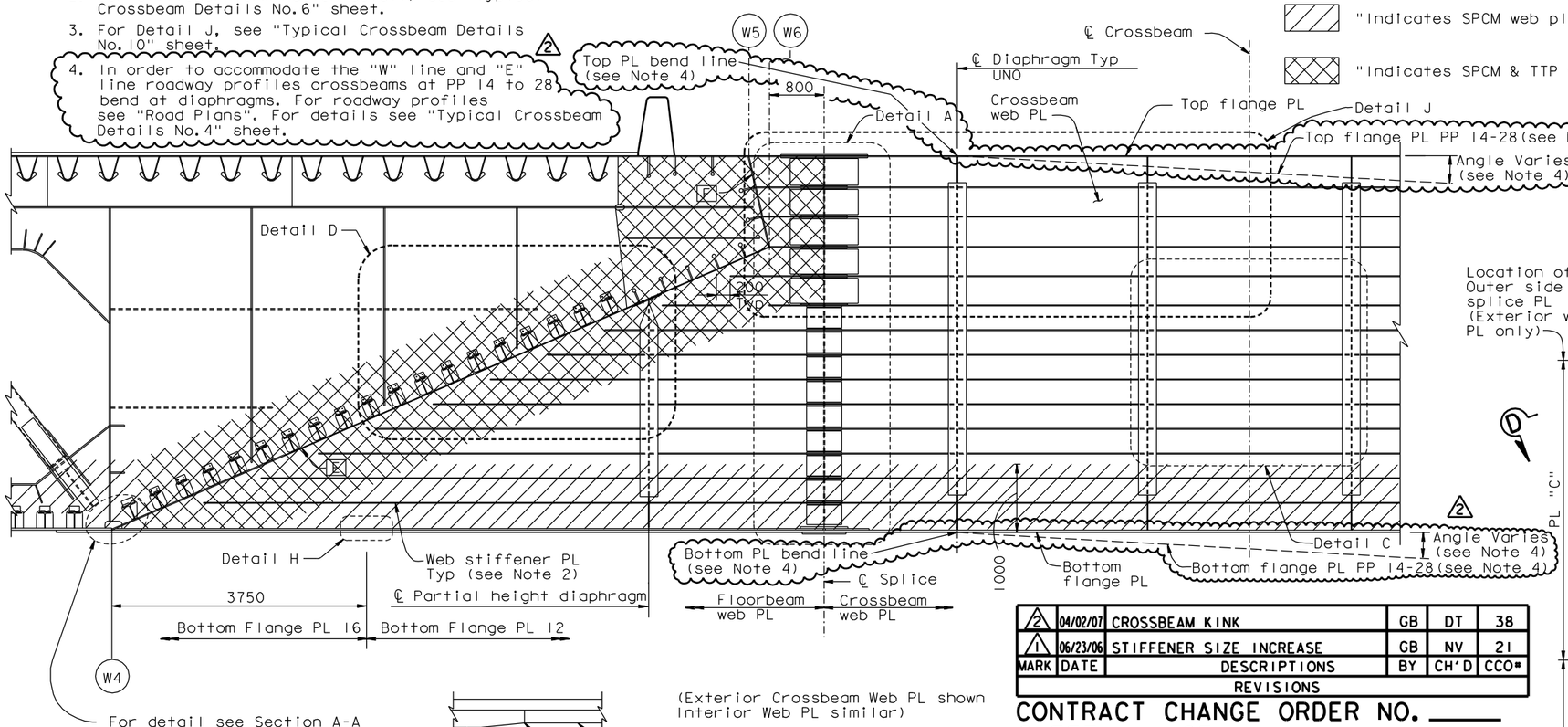


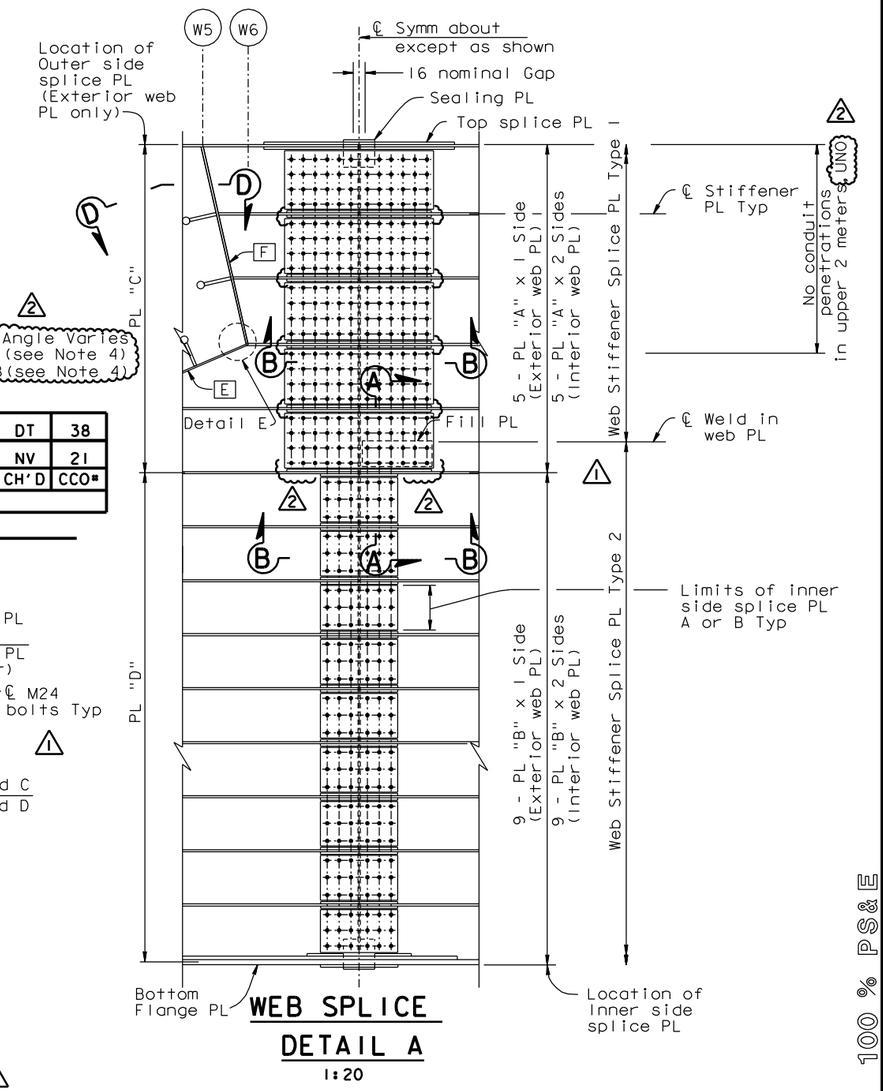


WEB SPLICE
DETAIL A
1:20

| MARK | DATE | DESCRIPTIONS | BY | CH'D | CCO# |
|---|---|---|---|---|---|
| 2 | 04/02/07 | CROSSBEAM KINK | GB | DT | 38 |
| 1 | 06/23/06 | STIFFENER SIZE INCREASE | GB | NV | 21 |

REVISIONS

CONTRACT CHANGE ORDER NO. ____
SHEET ___ OF ___

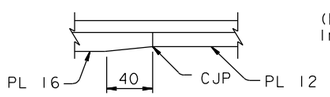


(Exterior Crossbeam Web PL shown interior Web PL similar)

SECTION C-C
1:40

DETAIL H
1:2.5

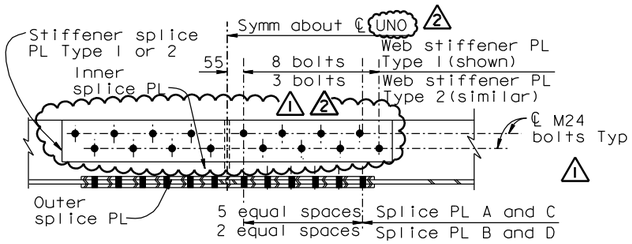


SECTION B-B
1:10

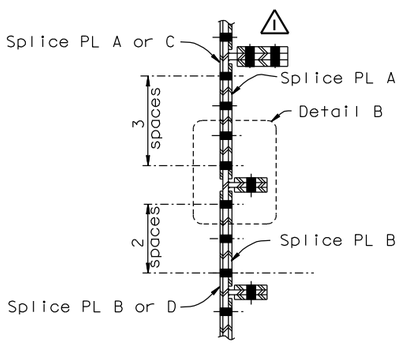


SECTION A-A
1:10

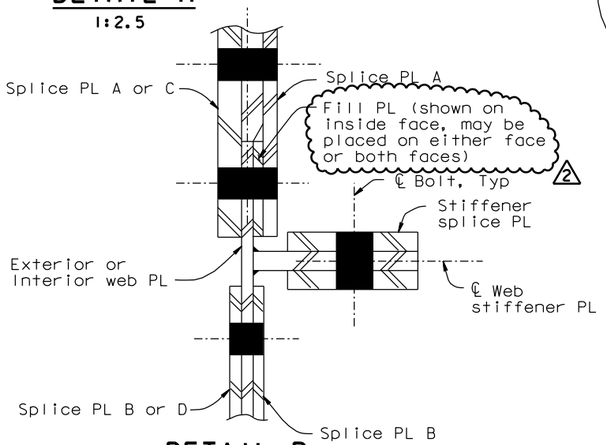


DETAIL B
1:2.5

| SPLICE PLATE TABLE | |
|---|---|
| Plate Type | Dimensions |
| Inner Side PL "A" | PL 14x878x1000 |
| Inner Side PL "B" | PL 10x310x520 |
| Outer Side PL "C" | PL 20x1000x2102 |
| Outer Side PL "D" | PL 14x520x3206 |
| Web Stiff PL Type 1 | PL 20x150x970 |
| Web Stiff PL Type 2 | PL 14x110x560 |

ALL DIMENSIONS ARE IN MILLIMETERS UNLESS OTHERWISE SHOWN

R. Valizadeh/V. Toan/Y.L./W.L./F.C.
DESIGN OVERSIGHT
Roya Valizadeh / Vong P. Toan / Y. Liu
SIGN OFF DATE 04/02/07
Rev. Date: 5-18-98

| | BY | CHECKED |
|---|---|---|
| DESIGN | G. Baker | P. Ritchie |
| DETAILS | D. Veytsman | T. McMeans |
| QUANTITIES | G. Baker | M. Roberts |

PREPARED FOR THE STATE OF CALIFORNIA DEPARTMENT OF TRANSPORTATION

R. Manzanarez
PROJECT ENGINEER

BRIDGE NO. 34-0006L/R
KILOMETER POST 13.2/13.9

SAN FRANCISCO OAKLAND BAY BRIDGE
EAST SPAN SEISMIC SAFETY PROJECT
SELF-ANCHORED SUSPENSION BRIDGE (SUPERSTRUCTURE & TOWER)
TYPICAL CROSSBEAM DETAILS NO. 5

ORIGINAL SCALE IN MILLIMETERS FOR REDUCED PLANS 0 10 20 30 40 50 60 70 80 90 100

CU 04
EA 0120F1

DISREGARD PRINTS BEARING EARLIER REVISION DATES
REVISION DATES (PRELIMINARY STAGE ONLY) 08/07/99 05/31/01 04/08/02 01/04/02 12/19/02
SHEET 242R2 OF

FILE => I:\bb\04-0120F1\sas\contract plans and cco\cco\in progress\cco#38\agcrs07.dgn

100% PS&E
DATE PLOTTED => 12 APR 2007 TIME PLOTTED => 13:42:26
USERNAME => vignatovsky