DIST.	COUNTY	ROUTE	KILOMETER POST TOTAL PROJECT	SHEET NO.	TOTAL SHEETS
04	SF	80	13.2/13.9	658R1	1204

George Baker
REGISTERED ENGINEER - CIVIL
1-27-03
PLANS APPROVAL DATE

REGISTERED PROFESSIONAL ENGINEER George S. Baker No. C57112 Exp. 12/31/05 CIVIL STATE OF CALIFORNIA

The State of California or its officers or agents shall not be responsible for the accuracy or completeness of electronic copies of this plan sheet.

T.Y. LIN / MOFFATT & NICHOL
825 BATTERY STREET
SAN FRANCISCO, CA 94111

To get to the web site, go to http://www.dot.ca.gov

Caltrans Metric

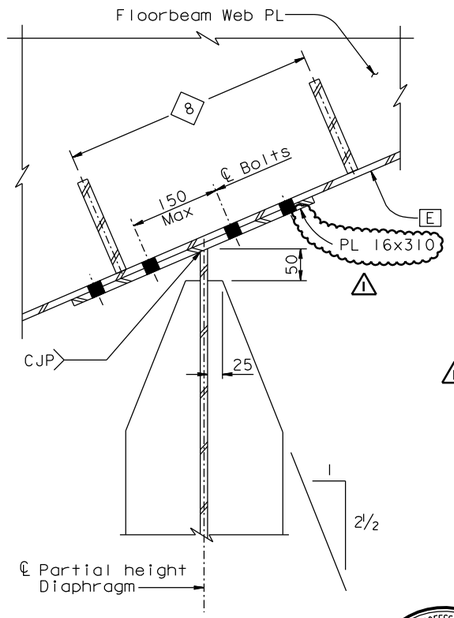

SECTION A-A
1:5

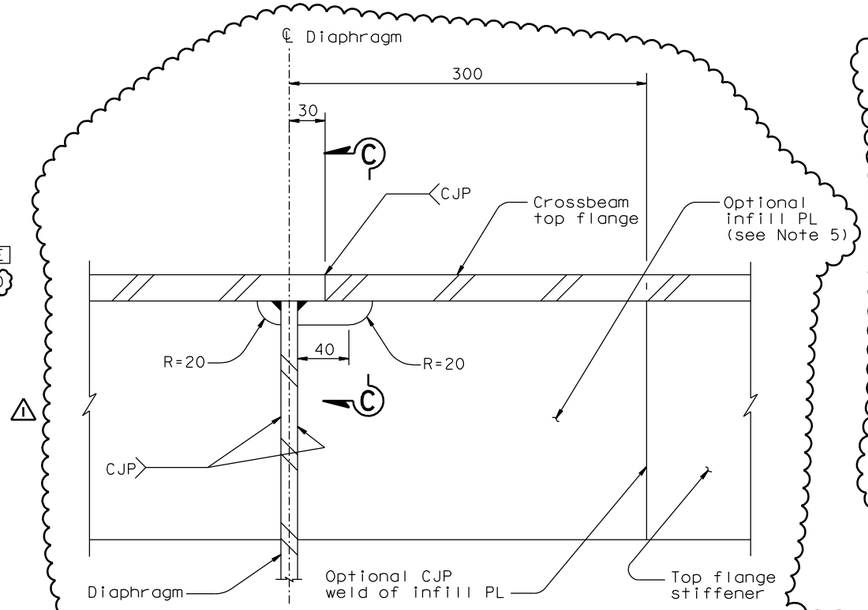

SHOP SPLICE AT CROSSBEAM DIAPHRAGM, PP14-28 (See Notes 2,3,4)

SECTION B-B
1:2.5

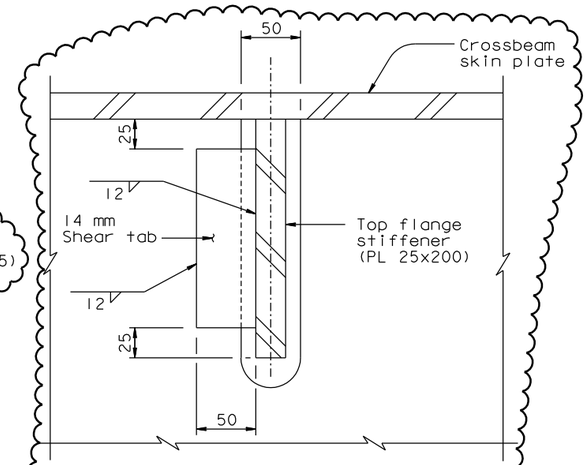

STIFFENER CUTOUT AT CROSSBEAM DIAPHRAGM

SECTION C-C
1:2.5

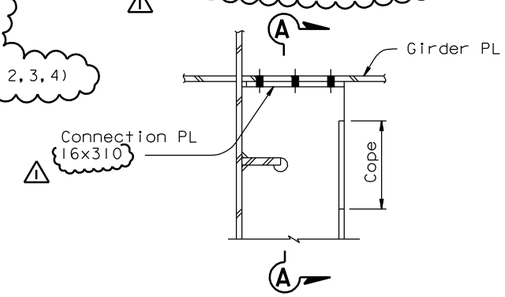

DETAIL C
1:10

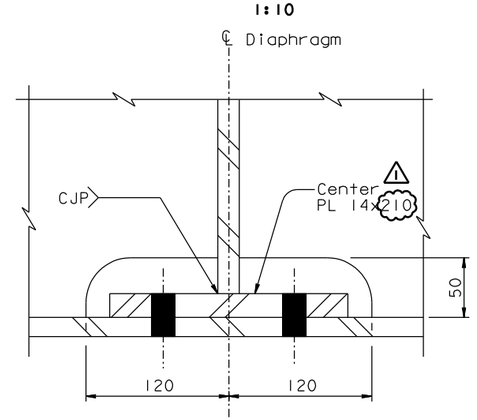

DETAIL E
1:2.5

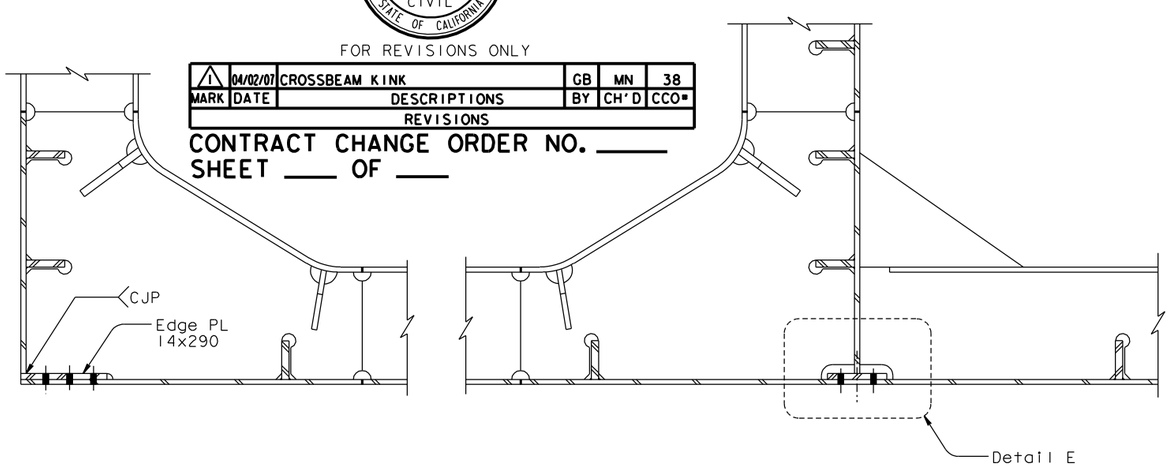

DETAIL D (see Note 1)
1:10

NOTES:

1. For details not shown, see "Typical Crossbeam Details No.3" sheet.
2. The location of the angular changes to the crossbeam skin plates due to the roadway geometry shall be at the first diaphragm inside the crossbeam field splice, towards the centerline of the bridge.
3. Stiffeners at the angle change, running longtiudinal to the crossbeam, shall be interrupted and welded to the diaphragm with a CJP weld. Stiffeners on opposite faces of the diaphragm shall be aligned within the tolerances specified for stiffener splices.
4. Crossbeam skin plates shall be twisted to accommodate roadway geometry shown on the plans.
5. The Contractor may provide an infill segment in the stiffeners to allow for fit-up. This length shall be welded to skin plate after fit-up.

REGISTERED PROFESSIONAL ENGINEER Marwan N. Nader No. C 054426 Exp. 12/31/07 CIVIL STATE OF CALIFORNIA

FOR REVISIONS ONLY

MARK	DATE	DESCRIPTIONS	BY	CH'D	CCO#
1	04/02/07	CROSSBEAM KINK	GB	MN	38

REVISIONS

CONTRACT CHANGE ORDER NO. ____
SHEET ___ OF ___

4 REVISED PER ADDENDUM NO. 4 DATED DECEMBER 9, 2005

ALL DIMENSIONS ARE IN MILLIMETERS UNLESS OTHERWISE SHOWN

R. Valizadeh/V. Toan/Y.L./W.L./F.C.
DESIGN OVERSIGHT
Roya Valizadeh / Vong Toan / Y. Liu
SIGN OFF DATE 04/02/07
Rev. Date: 5-18-98

	BY	CHECKED
DESIGN	G. Baker	P. Ritchie
DETAILS	S. Camo	T. McMeans
QUANTITIES	G. Baker	M. Roberts

PREPARED FOR THE STATE OF CALIFORNIA DEPARTMENT OF TRANSPORTATION

R. Manzanarez
PROJECT ENGINEER

BRIDGE NO. 34-0006L/R
KILOMETER POST 13.2/13.9

SAN FRANCISCO OAKLAND BAY BRIDGE
EAST SPAN SEISMIC SAFETY PROJECT
SELF-ANCHORED SUSPENSION BRIDGE
(SUPERSTRUCTURE & TOWER)

TYPICAL CROSSBEAM DETAILS NO. 4

ORIGINAL SCALE IN MILLIMETERS FOR REDUCED PLANS 0 10 20 30 40 50 60 70 80 90 100

CU 04
EA 0120F1

DISREGARD PRINTS BEARING EARLIER REVISION DATES

REVISION DATES (PRELIMINARY STAGE ONLY) 08/02/99 05/31/01 04/08/02 07/01/02 12/18/02 11/13/05

SHEET 241R1 OF

FILE => I:\bb\04-012001\sas\contract plans and cco\cco\in progress\cco#38\agcrs04.dgn

100 % PS&E

USERNAME => vignatovsk DATE PLOTTED => 12 APR 2007 TIME PLOTTED => 13:41:37