DIST.	COUNTY	ROUTE	KILOMETER POST TOTAL PROJECT	SHEET NO.	TOTAL SHEETS
04	SF	80	13.2/13.9	876S1	1204

REGISTERED ENGINEER - CIVIL

10-30-09
PLANS APPROVAL DATE

REGISTERED PROFESSIONAL ENGINEER James P. Duxbury No. C 64677 Exp. 06/30/11 CIVIL STATE OF CALIFORNIA

The State of California or its officers or agents shall not be responsible for the accuracy or completeness of electronic copies of this plan sheet.

T.Y. LIN / MOFFATT & NICHOL
825 BATTERY STREET
SAN FRANCISCO, CA 94111

Caltrans now has a web site! To get to the web site, go to: http://www.dot.ca.gov

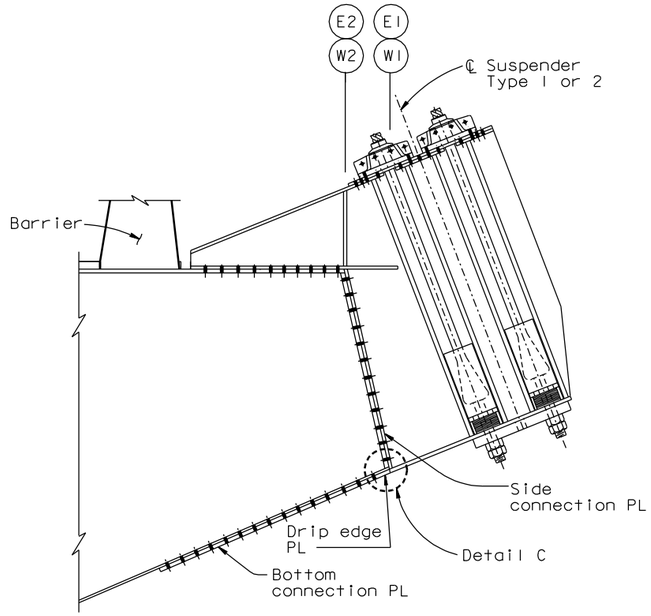

SECTION F-F
1:20

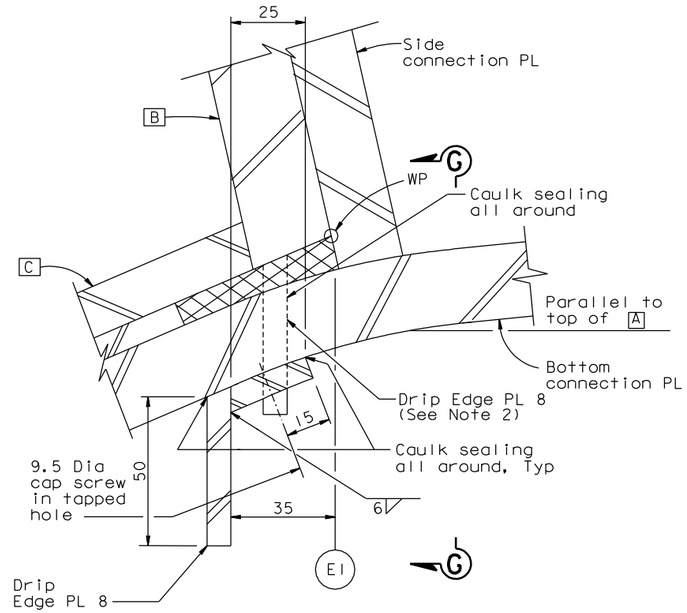

DETAIL C
1:1

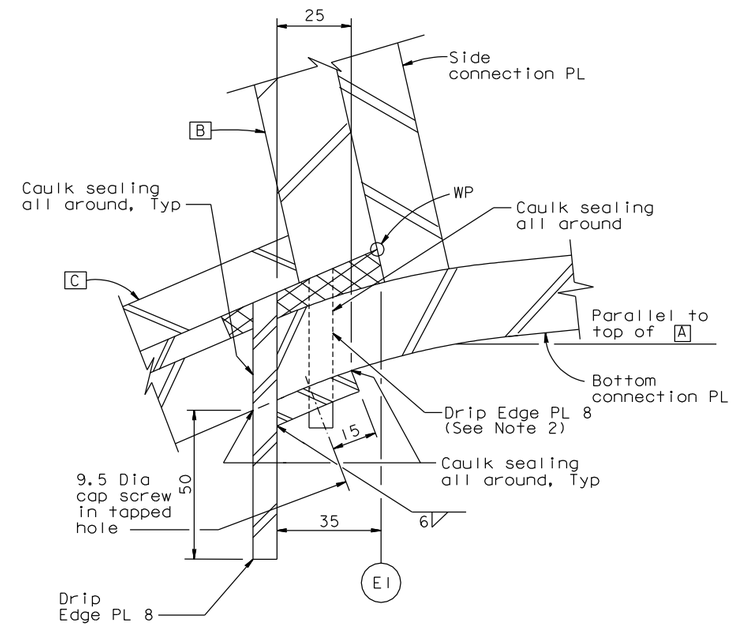

SECTION H-H
1:1

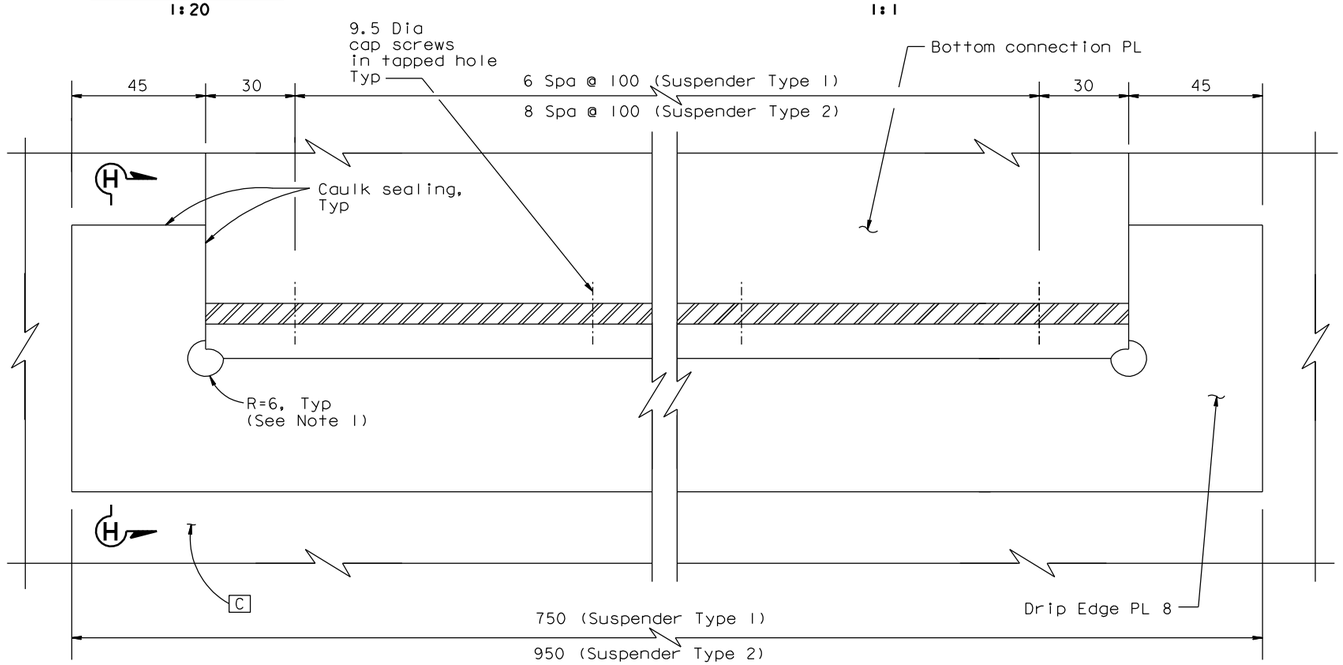

VIEW G-G
1:1

NOTES:

1. Round cope is provided for Contractor's fabrication and is optional. The cope shall be filled with caulk after drip edge PL installation.
2. Drip edge PL 8 welded to Girder Face C terminates at suspender bracket. Caulk sealing shall be applied all around the termination.

CONTRACT CHANGE ORDER NO. ____
SHEET ___ OF ___

REQUESTS FOR INFORMATION NOT ADDRESSED IN THIS CCO REMAIN IN FORCE

ALL DIMENSIONS ARE IN MILLIMETERS UNLESS OTHERWISE SHOWN

R. Valizadeh/V. Toan/Y.L./W.L./F.C.
DESIGN OVERSIGHT
SIGN OFF DATE 10/30/09

MARK	DATE	DESCRIPTIONS	BY	CH'D	CCO#
0	10/30/09	MOD. SUSP. BRACKETS & CABLE SYSTEM	CC	JD	37

REVISIONS

DESIGN	BY C. Choi	CHECKED J. Duxbury	
DETAILS	BY C. Choi	CHECKED J. Duxbury	
QUANTITIES	BY C. Choi	CHECKED J. Duxbury	

PREPARED FOR THE STATE OF CALIFORNIA DEPARTMENT OF TRANSPORTATION

R. Manzanarez
PROJECT ENGINEER

BRIDGE NO. 34-0006L/R
KILOMETER POST 13.2/13.9

SAN FRANCISCO OAKLAND BAY BRIDGE
EAST SPAN SEISMIC SAFETY PROJECT
SELF-ANCHORED SUSPENSION BRIDGE
(SUPERSTRUCTURE & TOWER)

DECK DRAINAGE DETAILS NO. 1A

Rev. Date: 5-18-98

ORIGINAL SCALE IN MILLIMETERS FOR REDUCED PLANS 0 10 20 30 40 50 60 70 80 90 100

CU 04
EA 0120F1

DISREGARD PRINTS BEARING EARLIER REVISION DATES 10/30/09

REVISION DATES (PRELIMINARY STAGE ONLY)

SHEET 459S1 OF

FILE => I:\bb\04-012001\sas\contract plans and cco\cco\cco#37\2-revision 10-30-09\dgn\akdkd01a.dgn

100% PS&E

USERNAME => oriverra DATE PLOTTED => 29 OCT 2009 TIME PLOTTED => 16:44:05