DIST.	COUNTY	ROUTE	KILOMETER POST TOTAL PROJECT	SHEET NO.	TOTAL SHEETS
04	SF	80	13.2/13.9	748R1	1204

Caltrans Metric

George Baker
REGISTERED ENGINEER - CIVIL
12-6-04
PLANS APPROVAL DATE

REGISTERED PROFESSIONAL ENGINEER George S. Baker No. C 57112 Exp. 12/31/05 CIVIL STATE OF CALIFORNIA

The State of California or its officers or agents shall not be responsible for the accuracy or completeness of electronic copies of this plan sheet.

T.Y. LIN / MOFFATT & NICHOL
825 BATTERY STREET
SAN FRANCISCO, CA 94111

Caltrans now has a web site! To get to the web site, go to: http://www.dot.ca.gov

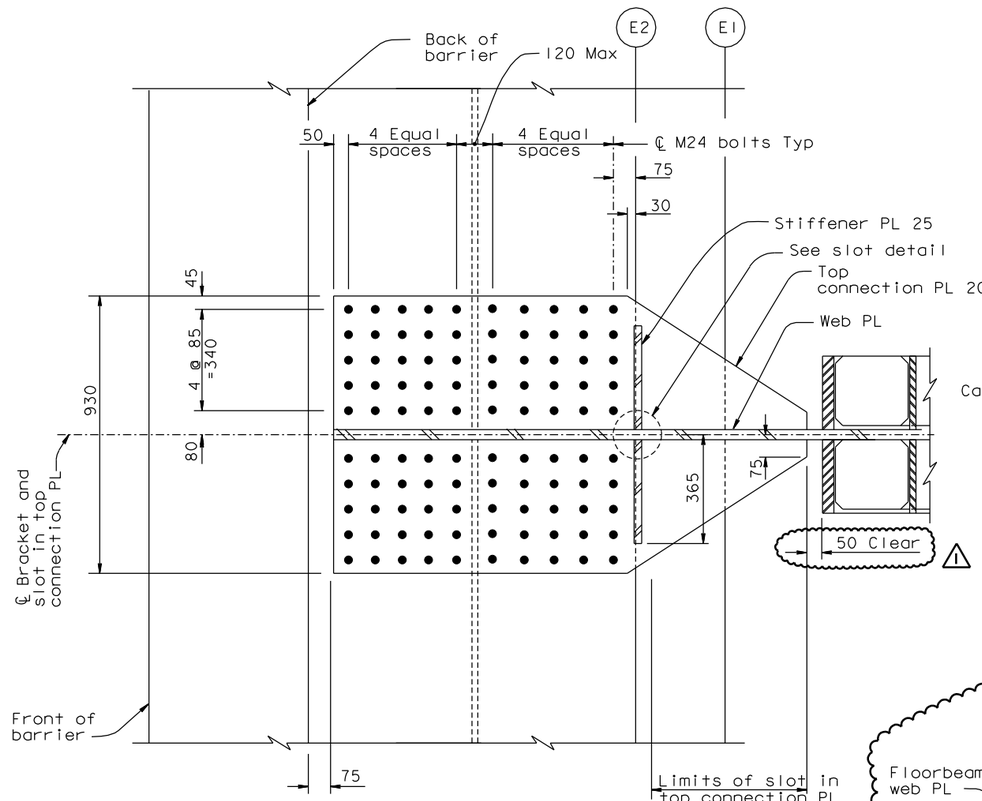

SECTION C-C
1:10

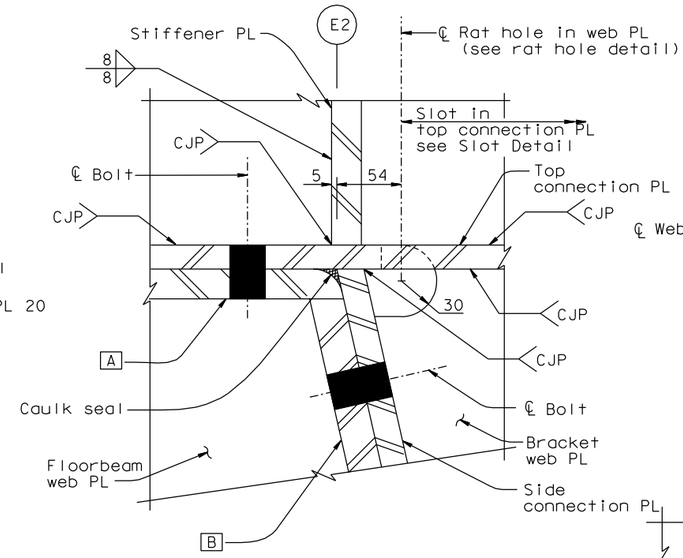

DETAIL A
1:2.5

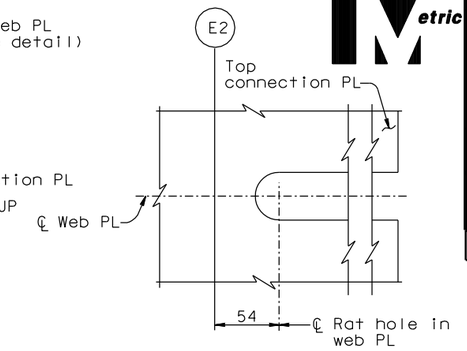

TOP CONNECTION PL SLOT DETAIL
1:2.5

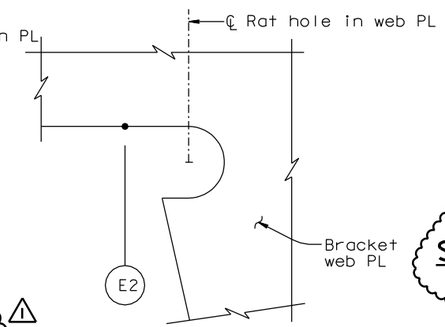

RAT HOLE DETAIL
1:2.5

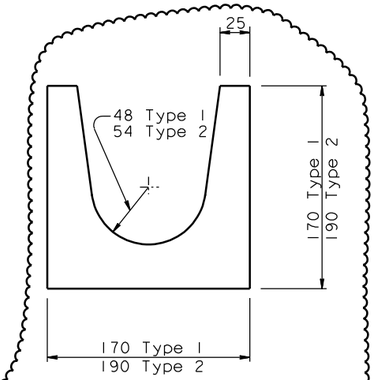

SLOTTED SHIM DETAIL
1:2.5
(see Note 5)

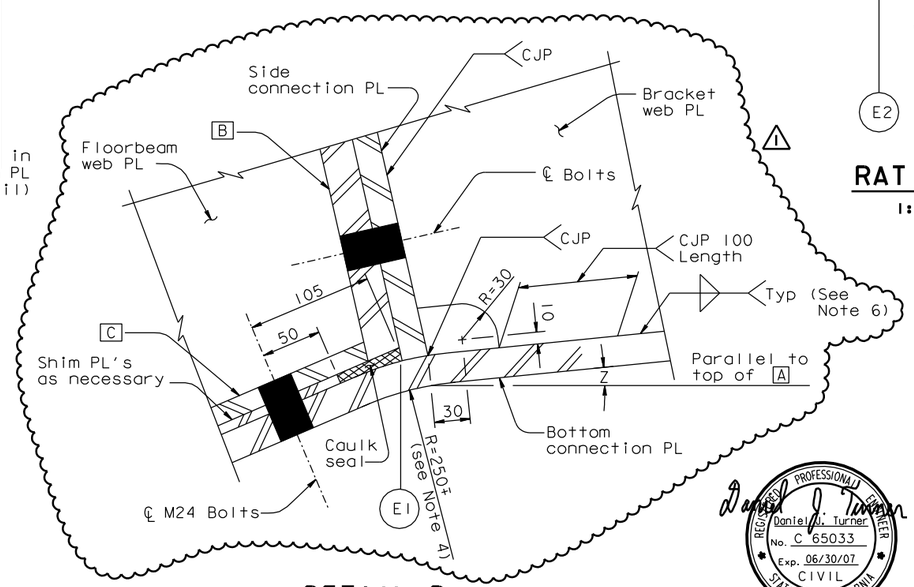

DETAIL B
1:2.5

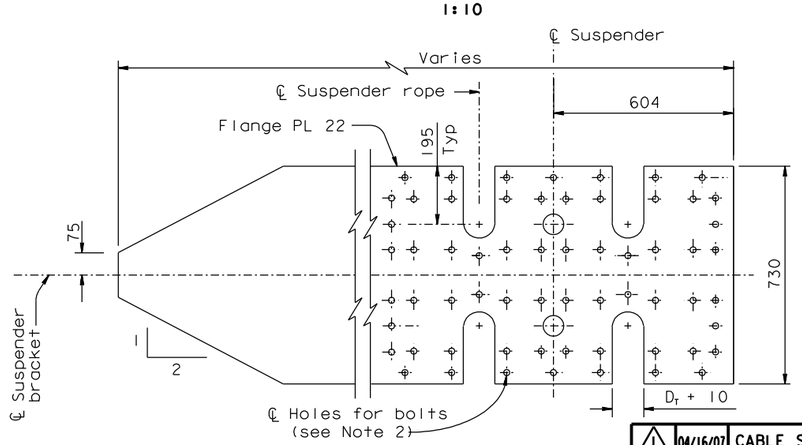

FLANGE PLATE DETAIL
1:10

NOTES:

1. For location of suspender types 1 and 2, see "Suspender Layout" sheets.
2. For flange plate bolt pattern, see "Suspender Bracket Details No. 4" sheet.
3. For suspender socket details, see "Suspender Socket Details" sheet.
4. The bend in the bottom connection PL shall be centered on the side connection PL.
5. For other shim notes see "Suspender Bracket Details No. 3" sheet.
6. For weld size see "Suspender Bracket Details No. 3" sheet.

Daniel J. Turner
REGISTERED PROFESSIONAL ENGINEER Daniel J. Turner No. C 65033 Exp. 06/30/07 CIVIL STATE OF CALIFORNIA

FOR REVISIONS ONLY

LEGEND:

D_T = Diameter of Opening at top of Suspender Socket (see Note 3)

MARK	DATE	DESCRIPTIONS	BY	CH'D	CCO#
1	04/16/07	CABLE SYSTEM	GB	DT	37

REVISIONS

CONTRACT CHANGE ORDER NO. _____
SHEET ____ OF ____

ALL DIMENSIONS ARE IN MILLIMETERS UNLESS OTHERWISE SHOWN

R. Valizadeh/V. Toan/Y.L./W.L./F.C.
DESIGN OVERSIGHT
SIGN OFF DATE 04/18/07

	BY		CHECKED
DESIGN	G. Baker		T. McMeans
DETAILS	S. Camo		P. Ritchie
QUANTITIES	C. Mauch		C. Mibelli

PREPARED FOR THE STATE OF CALIFORNIA DEPARTMENT OF TRANSPORTATION

R. Manzanarez
PROJECT ENGINEER

BRIDGE NO. 34-0006L/R
KILOMETER POST 13.2/13.9

SAN FRANCISCO OAKLAND BAY BRIDGE
EAST SPAN SEISMIC SAFETY PROJECT
SELF-ANCHORED SUSPENSION BRIDGE
(SUPERSTRUCTURE & TOWER)

SUSPENDER BRACKET DETAILS NO. 2

Rev. Date: 5-18-98

ORIGINAL SCALE IN MILLIMETERS FOR REDUCED PLANS 0 10 20 30 40 50 60 70 80 90 100

CU 04
EA 0120F1

DISREGARD PRINTS BEARING EARLIER REVISION DATES

REVISION DATES (PRELIMINARY STAGE ONLY): 05/15/99 08/02/99 05/31/01 04/08/02 07/01/02 12/19/02

SHEET 331R1 OF

FILE => I:\bb\04-012001\sas\contract plans and cco\cco\in progress\cco#37\dgn\cagsadll a.dgn

USERNAME => ptom DATE PLOTTED => 13 AUG 2007 TIME PLOTTED => 10:35:01

100 % PS&E