DIST.	COUNTY	ROUTE	KILOMETER POST TOTAL PROJECT	SHEET NO.	TOTAL SHEETS
04	SF	80	13.2/13.9	876S2	1204

Caltrans Metric

REGISTERED ENGINEER - CIVIL

04-02-10
PLANS APPROVAL DATE

REGISTERED PROFESSIONAL ENGINEER James P.Duxbury No. C 64677 Exp. 06/30/11 CIVIL STATE OF CALIFORNIA

The State of California or its officers or agents shall not be responsible for the accuracy or completeness of electronic copies of this plan sheet.

T.Y. LIN / MOFFATT & NICHOL
825 BATTERY STREET
SAN FRANCISCO, CA 94111

Caltrans now has a web site! To get to the web site, go to: http://www.dot.ca.gov

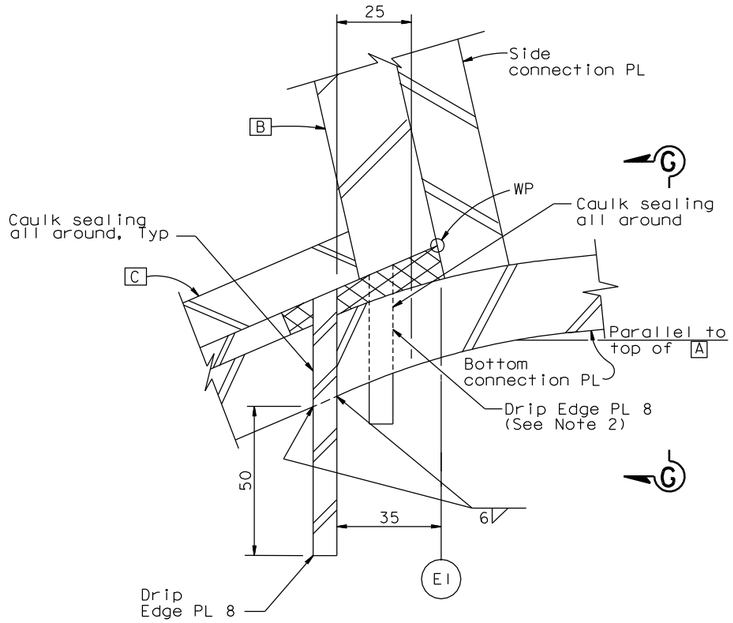

ALTERNATIVE DETAIL C (WELDED OPTION)

1:1

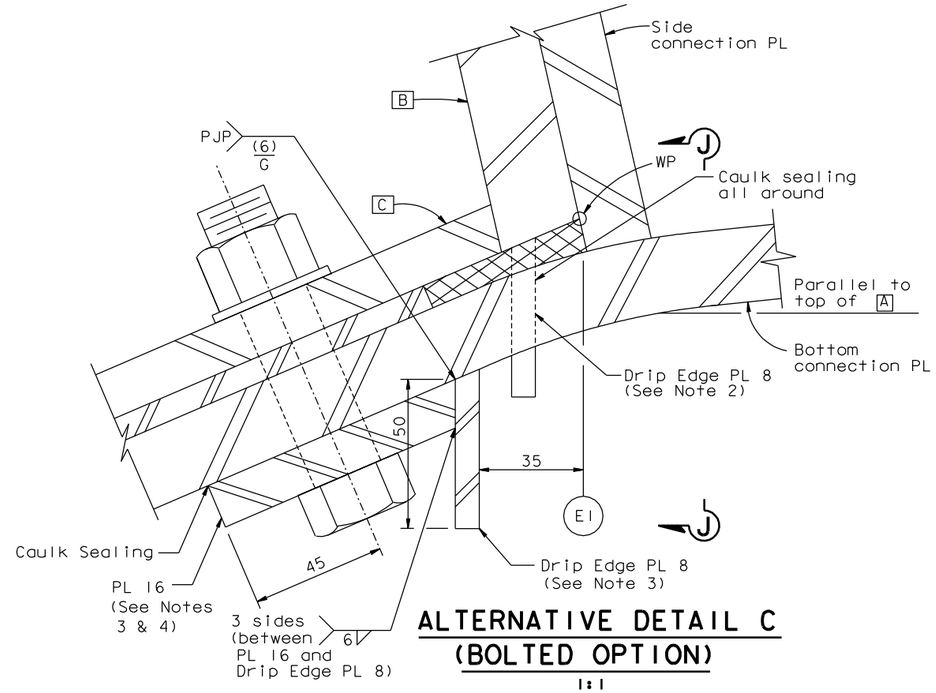

ALTERNATIVE DETAIL C (BOLTED OPTION)

1:1

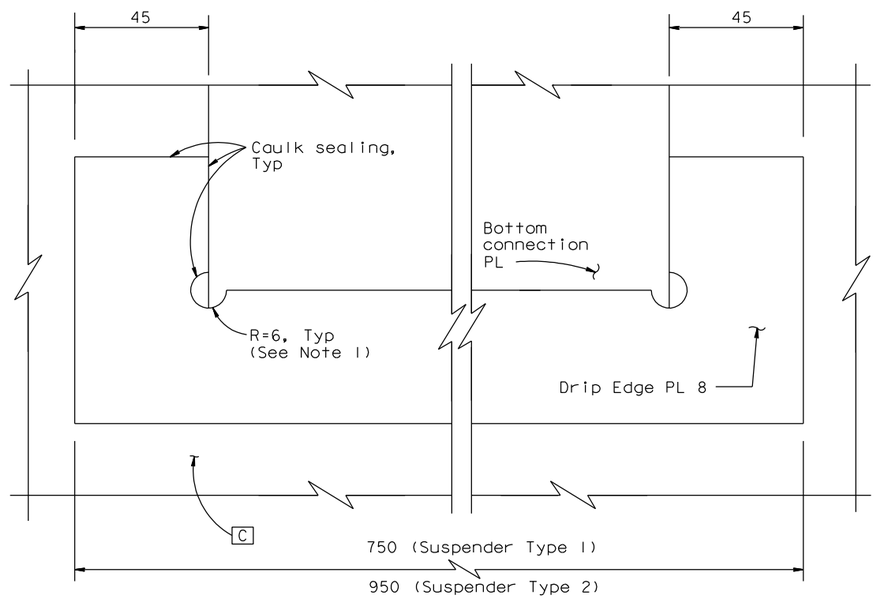

VIEW G-G

1:1

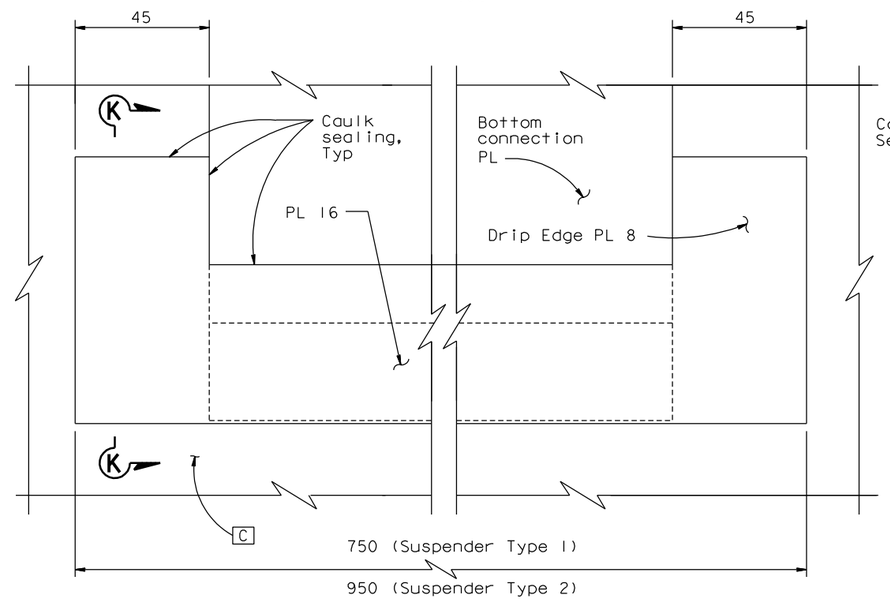

VIEW J-J

1:1

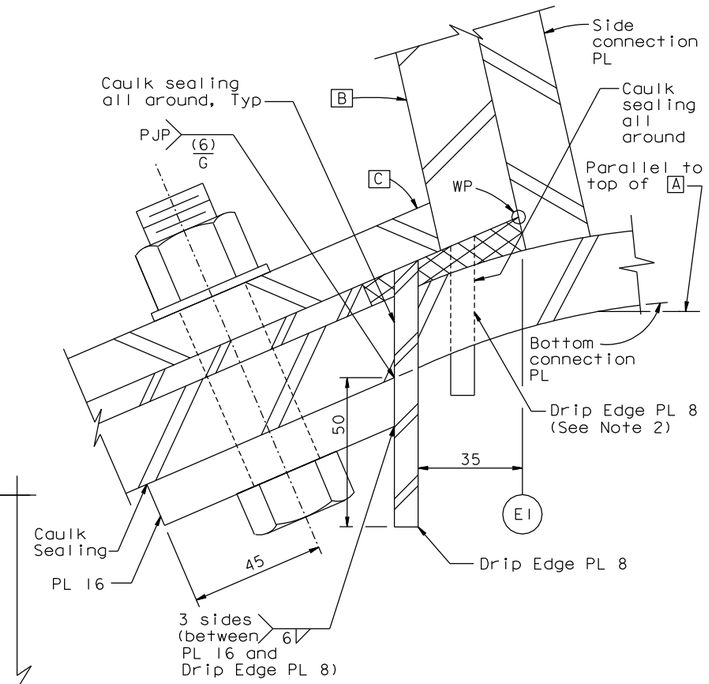

SECTION K-K

1:1

NOTES:

1. At the Contractor's option, "Alternative Detail C" may be used in lieu of "Detail C" on "Deck Drainage Details No. 1A" sheet.
2. Drip edge PL 8 welded to Girder Face C terminates at suspender bracket. Caulk sealing shall be applied all around the termination.
3. PL 16 and drip edge PL 8 shall be pre-assembled prior to field installation.
4. At the Contractor's option, short-slotted holes or standard oversized holes are acceptable in Drip Edge PL 8, provided hardened washers are used.

CONTRACT CHANGE ORDER NO.
SHEET ___ OF ___

REQUESTS FOR INFORMATION NOT ADDRESSED IN THIS CCO REMAIN IN FORCE

ALL DIMENSIONS ARE IN MILLIMETERS UNLESS OTHERWISE SHOWN

R. Valizadeh/V. Toan/Y.L./W.L./F.C.
DESIGN OVERSIGHT
Y. Liu
SIGN OFF DATE 04/02/10

MARK	DATE	DESCRIPTIONS	BY	CH'D	CCO#
0	04/02/10	MOD. SUSP. BRACKETS & CABLE SYSYTEM	CC	JD	37

REVISIONS

Rev. Date: 5-18-98

	BY	CHECKED
DESIGN	C. Choi	J. Duxbury
DETAILS	C. Choi	J. Duxbury
QUANTITIES	C. Choi	J. Duxbury

PREPARED FOR THE STATE OF CALIFORNIA DEPARTMENT OF TRANSPORTATION

R. Manzanarez
PROJECT ENGINEER

BRIDGE NO. 34-0006L/R
KILOMETER POST 13.2/13.9

SAN FRANCISCO OAKLAND BAY BRIDGE
EAST SPAN SEISMIC SAFETY PROJECT
SELF-ANCHORED SUSPENSION BRIDGE
(SUPERSTRUCTURE & TOWER)

DECK DRAINAGE DETAILS NO. 1B

ORIGINAL SCALE IN MILLIMETERS FOR REDUCED PLANS 0 10 20 30 40 50 60 70 80 90 100

CU 04
EA 0120F1

DISREGARD PRINTS BEARING EARLIER REVISION DATES

REVISION DATES (PRELIMINARY STAGE ONLY) 04/02/10

SHEET 459S2 OF

FILE => I:\bb\04-01200I\sas\contract plans and cco\cco\cco#37\4-update 04-02-10\dgn\akdkd01b.dgn

100% PS&E

DATE PLOTTED => 31 MAR 2010 TIME PLOTTED => 14:16:35

USERNAME => arivera