DIST.	COUNTY	ROUTE	KILOMETER POST TOTAL PROJECT	SHEET NO.	TOTAL SHEETS
04	SF	80	13.2/13.9	814R1	1204

REGISTERED ENGINEER - CIVIL

12-6-04
PLANS APPROVAL DATE

REGISTERED PROFESSIONAL ENGINEER Marwan N. Nader No. C 054426 Exp. 12/31/07 CIVIL STATE OF CALIFORNIA

The State of California or its officers or agents shall not be responsible for the accuracy or completeness of electronic copies of this plan sheet.

T.Y. LIN / MOFFATT & NICHOL
825 BATTERY STREET
SAN FRANCISCO, CA 94111

Caltrans now has a web site! To get to the web site, go to: http://www.dot.ca.gov

Panel Point	Handrope Bracket Angles		
	θ_1	θ_2	θ_3
10	60°	116°	NA
40	54°	116°	35°
44	60°	112°	30°
102	78°	96°	NA

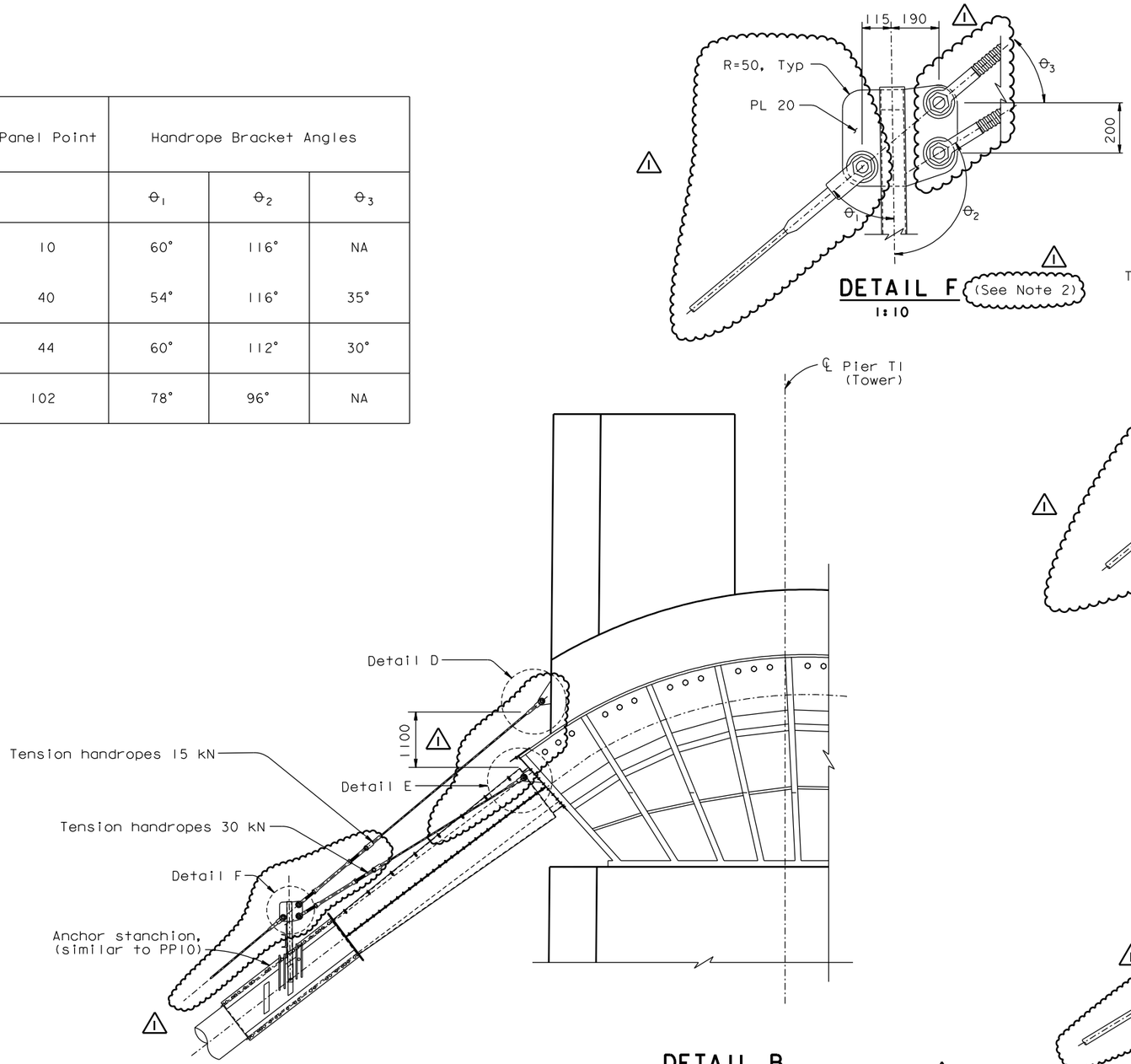

DETAIL F (See Note 2)
1:10

DETAIL B

DETAIL AT PP 40 (See Note 2)
1:50
(Details at PP 44 are similar)

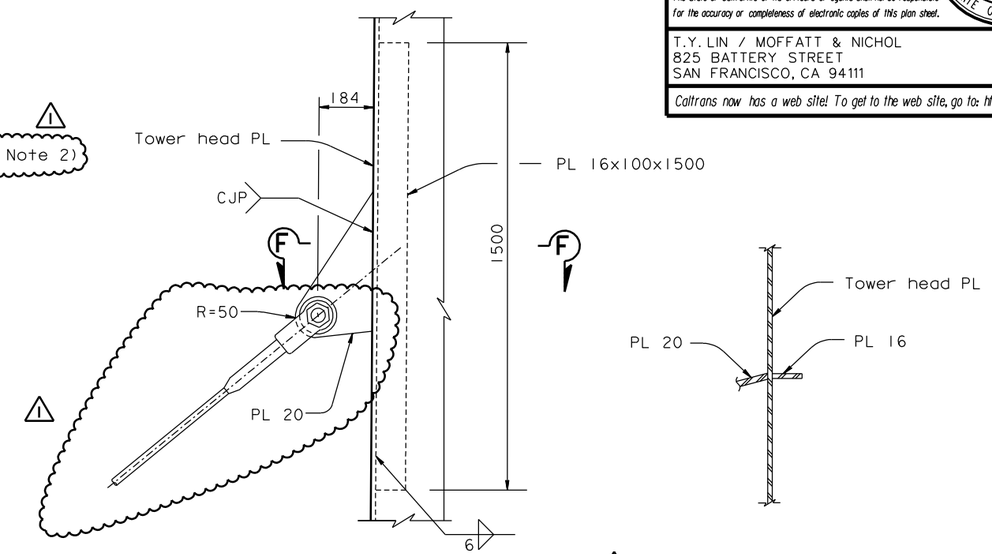

DETAIL D (See Note 2)
1:10

SECTION F-F
1:10

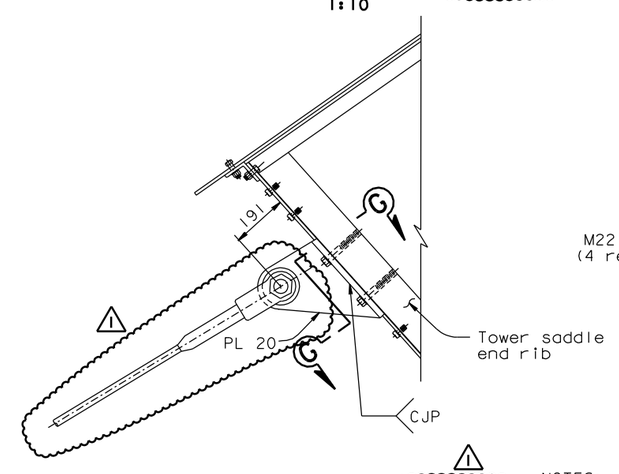

DETAIL E (See Note 2)
1:10

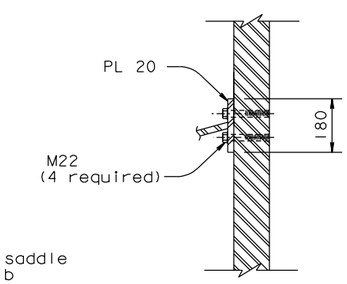

SECTION G-G
1:10

NOTES:

1. For anchor stanchion, see "Cable Handrope Details No.2" sheet.
2. For details not shown see "Cable Handrope Details No.2" sheet.

MARK	DATE	DESCRIPTIONS	BY	CH'D	CCO#
1	04/16/07	CABLE SYSTEM	GB	MN	37

REVISIONS

CONTRACT CHANGE ORDER NO. _____
SHEET ____ OF ____

ALL DIMENSIONS ARE IN MILLIMETERS UNLESS OTHERWISE SHOWN

SAN FRANCISCO OAKLAND BAY BRIDGE
EAST SPAN SEISMIC SAFETY PROJECT
SELF-ANCHORED SUSPENSION BRIDGE
(SUPERSTRUCTURE & TOWER)

CABLE HANDROPE DETAILS NO. 3

R. Valizadeh/V. Toan/Y.L./W.L./F.C.
DESIGN OVERSIGHT
SIGN OFF DATE 04/18/07

	BY	CHECKED
DESIGN	M. Nader	T. McMeans
DETAILS	G. Baker	T. McMeans
QUANTITIES	G. Baker	C. Mibelli

PREPARED FOR THE STATE OF CALIFORNIA DEPARTMENT OF TRANSPORTATION

R. Manzanarez
PROJECT ENGINEER

BRIDGE NO. 34-0006L/R
KILOMETER POST 13.2/13.9

CU 04
EA 0120F1

DISREGARD PRINTS BEARING EARLIER REVISION DATES

REVISION DATES (PRELIMINARY STAGE ONLY): 08/27/99 05/31/01 04/08/02 07/01/02 12/19/02 09/06/04

SHEET 397R1 OF

Rev. Date: 5-18-98

ORIGINAL SCALE IN MILLIMETERS FOR REDUCED PLANS 0 10 20 30 40 50 60 70 80 90 100

FILE => I:\bb\04-012001\sas\contract plans and cco\cco\in progress\cco#37\dgn\cagshr09.dgn

USERNAME => ptom DATE PLOTTED => 28 AUG 2007 TIME PLOTTED => 14:48:16

100 % PS&E